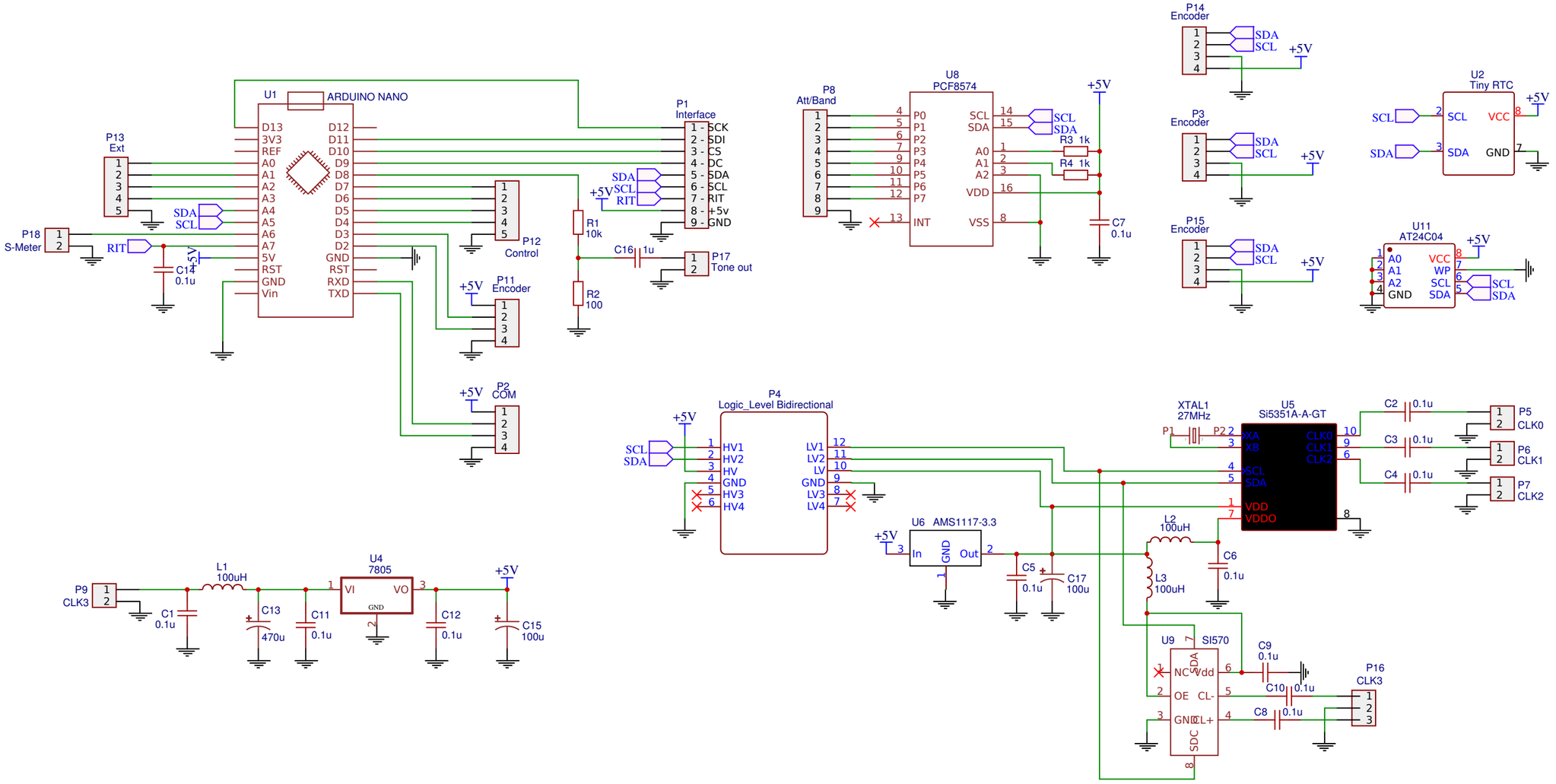

TITLE: Si5351 Syntez CPU	REV: 1.0
Date: 2017-05-14	Sheet: 1/1
EASYEDA V4.1.3	Drawn By: ban.relayer