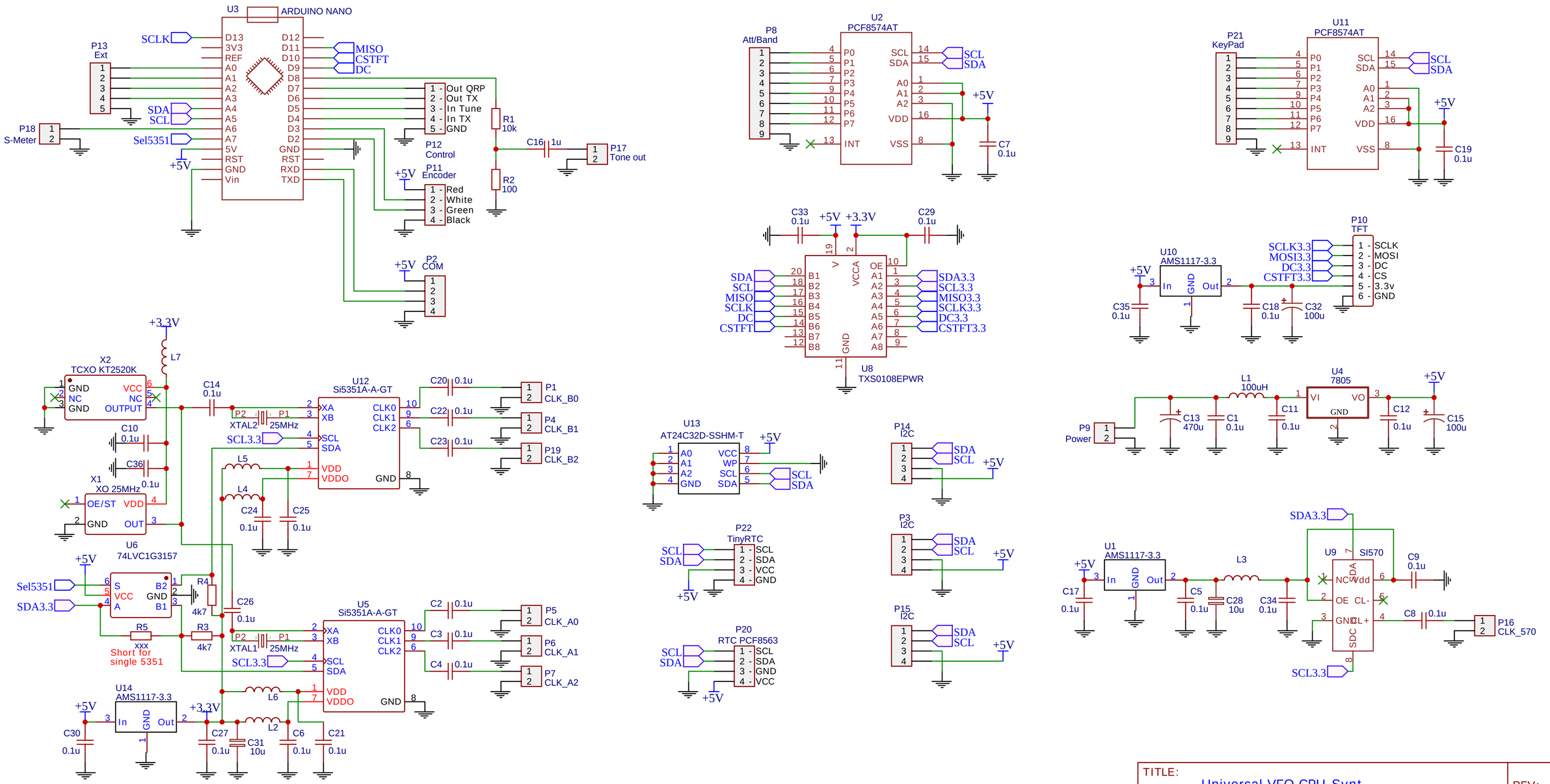

TITLE: Universal VFO CPU-Synt	REV: 1.0
EasyEDA	Company: UR5FFR — Sheet: 1/1
	Date: 2019-05-08 — Drawn By: ban.relayer