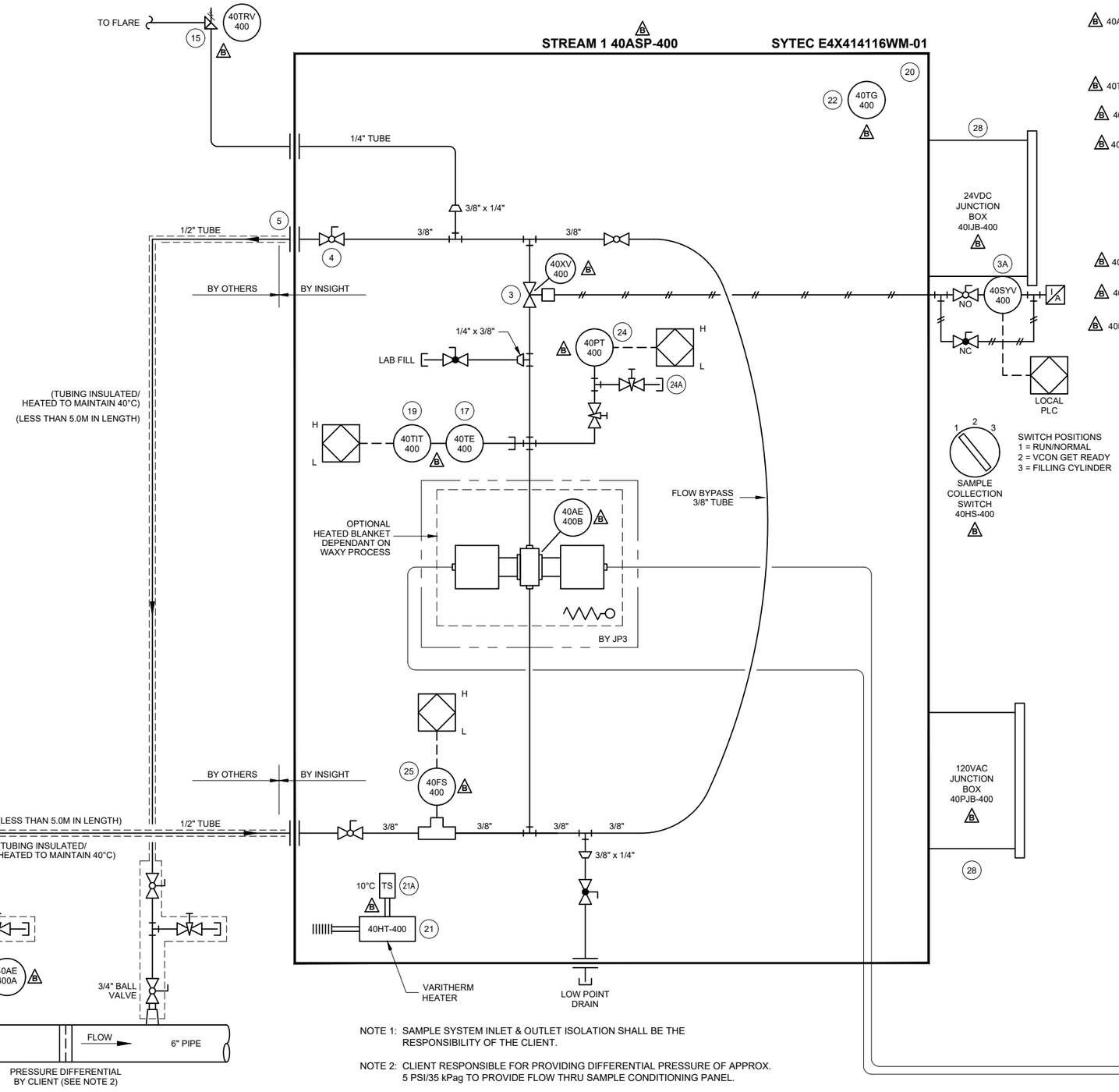

	ITEM	QTY.	PART NUMBER	MANUFACTURER	DESCRIPTION
B 40AE-400A	1	1	CUSTOM INJECTION/SAMPLE QUILL	AIRCOM	SAMPLE PROBE, 1/2" PIPE , TBD PROBE. WITH CRN
	1A	1	-	AIRCOM	NDT-HYDRO TEST
	3	1	2K2050SSE5NCA	JORDAN VALVE	VALVE, ANGLE SEAT, 1/2" TUBE, 316SS
	3A	1	EF8314G301-24	ASCO	SOLENOID VALVE, LOW POWER, 1/4"
B 40TRV-400	15	1	SS-4R3A AND 177-R3A-K1-A SHIPPED LOOSE	SWAGELOK	RELIEF VALVE, THERMAL, SET @ TBD kPa, 1/4" TUBE x 1/4" TUBE W/CRN
B 40TE-400	17	1	RT7-2ALT-FX-1.5-A-S-3-LT-2.5-14-SP	AIRCOM	TEMPERATURE ELEMENT, 100 OHM PT RTD, 1/2" MNPT, 316SS RATED TO 3700 PSI, 2.5" U LENGTH WITH CRN
B 40TIT-400	19	1	TMT142-G2113GBLA1	E&H	TEMP. XMITTER WITH 4-20mA & LOCAL DISPLAY, -20°C to 80°C
	20	1	E4X414116WM-01 CABINET 41"x41"x16", GRAINED #4ga 304SS c/w 12ga PAINTED WHITE INTERNAL BACKPAN & BOTTOM GLAND PLATE, CSA/UL/4X/IP65, 304SS SLOT LATCHES NON-PADLOCKABLE	SYTEC	SYTEC ENCLOSURE
	21	1	HACE-E CP VARITHERM CPA 400 T3 120	INTERTEC	INTERTEC HEATER, 400W, 120 VAC, CSA CLASS 1, DIV 1
	21A	1	AT-10	-	INTERTEC THERMOSTAT, AT STYLE, 10C SETPOINT
B 40TG-400	22	1	30 025D005G4MM	WIKA	THERMOMETER FOR ENCL. TEMP, 1/2" NPT CONNECTION, -15 TO 90C 3' DIAL TATTLE TALE
B 40PT-400	24	1	PMP71-VBC1UE1RDAA4-N2PA	E&H	PRESSURE TRANSMITTER
	24A	1	DA63M-TB2BFG	E&H	PRESSURE MANIFOLD, 1/2" FNPT
B 40FSL-400	25	1	FLT93L-4A1A1AD4BB0000	FCI	FLOW SWITCH, 24 VDC, EX-PROOF, CRN, FMc.DUAL SPDT
	28	2	L-FJ1412CHNFQ	RITTAL	NEMA 4X JUNCTION BOX
	32	1	CTX	JP3	NIR ANALYZER

VALVE NORMALLY OPENED

VALVE NORMALLY CLOSED

TUBING SPECIFICATIONS

1/4" X 0.049" WALL, SEAMLESS, 316LSS, ASTM A269, P/N SS-T4-S-049-20
3/8" X 0.049" WALL, SEAMLESS, 316LSS, ASTM A269, P/N SS-T6-S-049-20
1/2" X 0.049" WALL, SEAMLESS, 316LSS, ASTM A269, P/N SS-T8-S-049-20

DESIGN CONDITIONS (PROCESS)

MAX DESIGN PRESSURE: TBD kPag @ TBD°C
MAX. DESIGN TEMPERATURE: TBD
MIN. DESIGN TEMPERATURE: -29°C
SERVICE: CONDENSATE
LINE CLASS: TBD
AREA CLASS: TBD

SCS DESIGN

MAX. PRESSURE: 9930 kPag
MAX. TEMPERATURE: 107°C
ENCLOSURE RATING: CLASS I, DIV. 1, GRP C&D, T3
ANALYZER RATING: CLASS I, DIV. 2

NOTE 1: SAMPLE SYSTEM INLET & OUTLET ISOLATION SHALL BE THE RESPONSIBILITY OF THE CLIENT.

NOTE 2: CLIENT RESPONSIBLE FOR PROVIDING DIFFERENTIAL PRESSURE OF APPROX. 5 PSI/35 kPag TO PROVIDE FLOW THRU SAMPLE CONDITIONING PANEL.

Prepared By:

INSIGHT ANALYTICAL

Engineering and Permit Stamps

REV	REVISION	DATE	BY	CHK	APP
A	ISSUED FOR APPROVAL	2020OCT08	DJI	.	
B	TAG NO's ADDED & TRV RELOCATED	2020OCT23	DJI	.	
.	.	.	.	.	
.	.	.	.	.	
.	.	.	.	.	
.	.	.	.	.	
.	.	.	.	.	

Prepared for

SEVEN GENERATIONS ENERGY

SEVEN GENERATIONS - KARR GAS PLANT
STREAM 1 P&ID FOR JP3 NIR ANALYZER

INSIGHT ANALYTICAL JOB #: 2020-0375
CLIENT JOB #: U19-105

DRAWN:	SCALE:	DRAWING No:	REV:
DJI	NTS	20200375-P-20-01	B