NO. 2172342
SHEET 0
OF 19

DIAGNOSTIC TEST

TITLE CORE STORAGE TEST - L 20K - DTX05L
MACH. TYPE 1620-1 BY HNJ APPR. DATE

ENGINEERING CHANGE HISTORY

E/C NO.	DATE	SHEETS AFFECTED
404980	5-7-64	1 - 19

E/C NO.	404980						
DATE	5-7-64						

Because this test destroys the contents of core, it is not DIPAL compatible.

PURPOSE OF TEST

This diagnostic tests the standard 20 K storage for marginal conditions by generating worst case half select noise patterns. It is divided into two parts which are loaded separately as if two different diagnostics.

5H - Tests all addresses ending in 50 through 99 (over 50 sense segment)

5L - Tests all addresses ending in 00 through 49 (under 50 sense segment)

The running time of either part is 36 seconds per pass.

SWITCH CONTROL

The Console Program Switches have the following control functions in this test:

Program Switch 1	ON	- Bypass all error routines
	OFF	- Type out errors
Program Switch 2	ON	- Loop at test address
	OFF	- Sequence through entire test
Program Switch 3		- Not Used
Program Switch 4	ON	- Repeat Diagnostic
	OFF	- Card Input: Load next program at end of pass

The PARITY Switch set in the PROGRAM position will allow the program to run without manual intervention but in the case where the error forms an illegal character it will be necessary to run with the switch in the STOP position in order to determine the failing bit.

The I/O and OVERFLOW Switches are set to the PROGRAM position.

TEST PROCEDURE

Card Input:

1. Clear Core Storage by inserting 31 00003 00002. Release and Start.
2. Load test deck from 1622 by pushing LOAD button or by inserting 36 00000 00300 R-S.

3. Both programs are on the same tape, however they must be loaded separately. The first program on the tape is X05H, the second is X05L.

   To reproduce the Paper Tape, insert 3600000 00300, release, and press "SIE" button. DO NOT reposition the tape on the Reader after the program is read in, as the second program is in position to be read. After the program has been loaded, insert

```
LOC
00000   38 00024   00200
00012   35 00402   00200
00024   49 00402   00000
00036   36 00402   00300
00048   36 10002   00300
00060   49 00402   0000‡
```

   After MAR has counted to 04954, stop by pressing "SCE", reset, insert

```
LOC
00000   35 19999   00200
00012   35 10002   00200
00024   35 19999   00200
00036   48
```

   Release/start.
   This is done to prevent writing 5000 zeros on tape.

   When the first program, DTX05H, has been punched, clear core and insert 36 00000 00300 to read the second program, DTX05L. Release, and press "SIE" button.

   After the program has been loaded, insert

```
LOC
00000   38 00024   00200
00012   35 05052   00200
00024   49 05052   00000
00036   36 05052   00300
00048   36 15052   00300
00060   49 05052   0000‡
```

   Release/start.

   When MAR reaches 09604, stop by pressing "SCE" button, insert

```
LOC
00000   35 19999   00200
00012   35 15052   00200
00024   35 19999   00200
00036   48
```

   Release/start.

   When MAR reaches 16779, stop by pressing "SCE" button, reset, and start.

4. 1620 will Halt with 00011 in MAR after deck is loaded. Push START to execute program.

The diagnostic was assembled by the SPS Assembly Program and uses a standard SPS Load routine. A detailed listing of the loader along with a brief introduction to the SPS Assembly Program may be found in the DTX02 Diagnostic write-up.

TEST DESCRIPTION

The pattern 7788 is written in the area to be tested and then each address in turn is complimented and then restored to its original value. Read out of the originally written character is with the half select noise in phase. Read out of the complimented character is with the half select noise out of phase. After all addresses are tested the pattern is reversed and the procedure is repeated so that every core is tested under both conditions.

In order to provide the best chance of successful test operation, the two parts of the test are confined to diagonally opposite corners of storage. No common X or Y drive line, or sense segments are used in the program area. There is no possibility of isolation in the address decode, matrix switch area.

The machine add and multiply tables are not used in this program as no arithmetic instructions have been used. The program is made up of information Transfer and Branch type instructions only.

Any reference to add tables in the listing or flow chart are to program tables, not the machine add table.

The pattern is first written throughout the tested area of storage with a Transmit Record instruction in blocks of fifty characters. If an error occurs during this phase of the program, the error routine must scan the fifty character field with a Transmit Digit instruction in order to find the specific address that failed.

The Compliment and Restore phase uses a Transmit Digit instruction, so the error address is always known. Because of the lengthy nature of this test, a rather large address modification loop is used in order to reduce the running time to a minimum. Ten addresses are completely checked each time through the loop. The pattern set up in the loop is 7788778877 (10 digits). It can be seen that it will be necessary to compliment this pattern each time through the loop in order to keep it progressing properly. In the flow chart, this is done in a clock labelled "Swap Test Digit Area".

ERROR HALTS	Explanation
00011	Program Loading Complete
04637	1H Pass complete and Program Switch 4 off. Waiting for card reader
09287	1L Pass complete and Program Switch 4 off. Waiting for card reader

ERROR PRINT OUT

In the pattern writing phase, an error print out may be one or two lines. An error in an even adr only will give a one line print out. An error in an odd address will give a two line print out. One for both the even and odd address.

Even address error:

X is error char XXXXX is error ADR (Even Address)

Odd address error:

X is error char XXXXX is error ADR (Even Address)
X is error char XXXXX is error ADR (Odd Address)

In the Compliment and Restore phase the characters from both even and odd addresses are always printed along with the even address on a single line.

XX is error char XXXXX is error ADR (Even Address)

Both characters will be indicated as out of parity regardless of the failure.

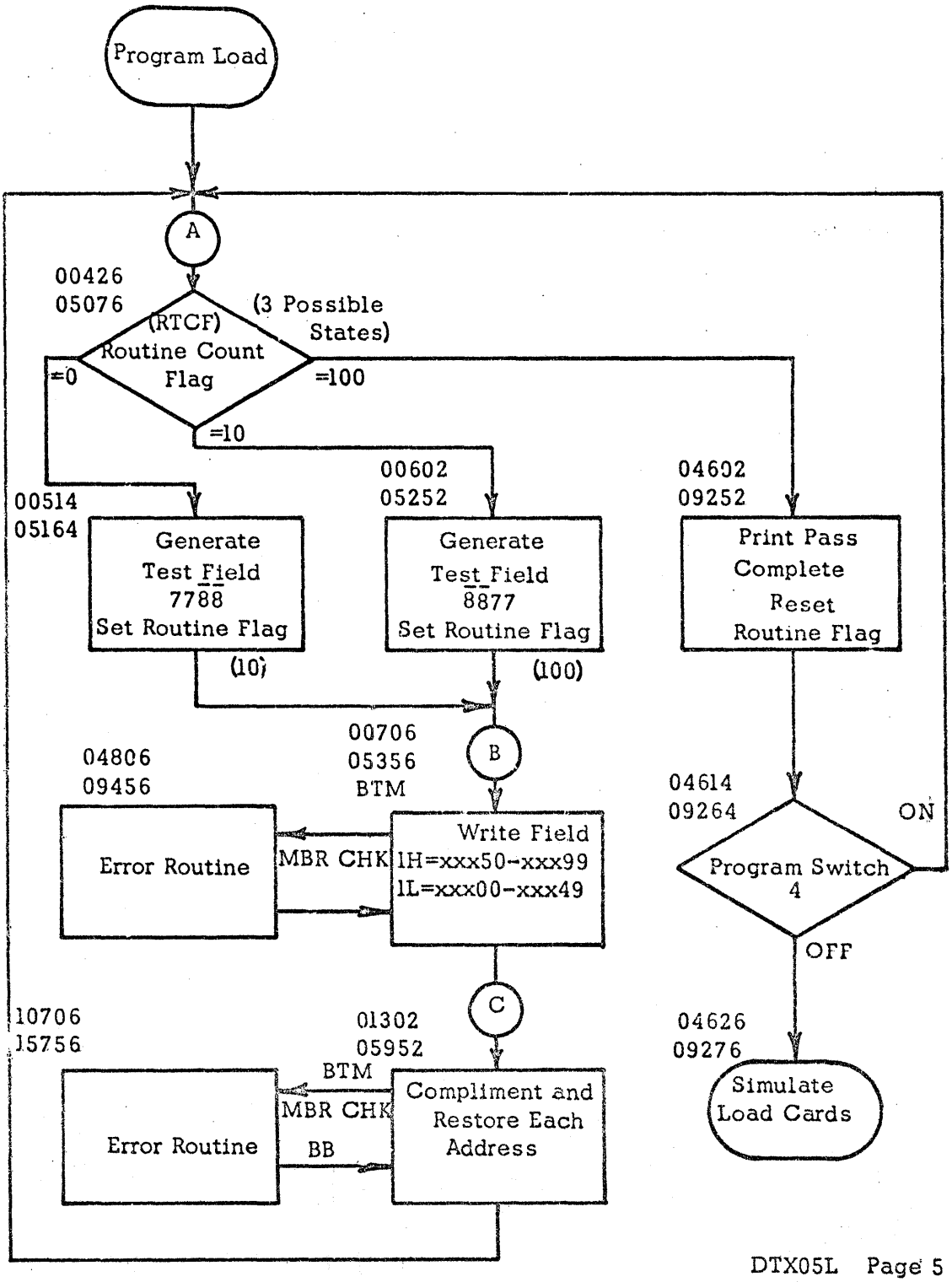
Program Load
A
00426
05076
(RTCF)
Routine Count
Flag
(3 Possible
States)
=0
=10
=100
00514
05164
Generate
Test Field
7788
Set Routine Flag
(10)
00602
05252
Generate
Test Field
8877
Set Routine Flag
(100)
04602
09252
Print Pass
Complete
Reset
Routine Flag
00706
05356
BTM
B
04806
09456
Error Routine
MBR CHK
Write Field
1H=xxx50-xxx99
1L=xxx00-xxx49
04614
09264
Program Switch
4
ON
OFF
C
10706
15756
01302
05952
BTM
MBR CHK
BB
Error Routine
Compliment and
Restore Each
Address
04626
09276
Simulate
Load Cards

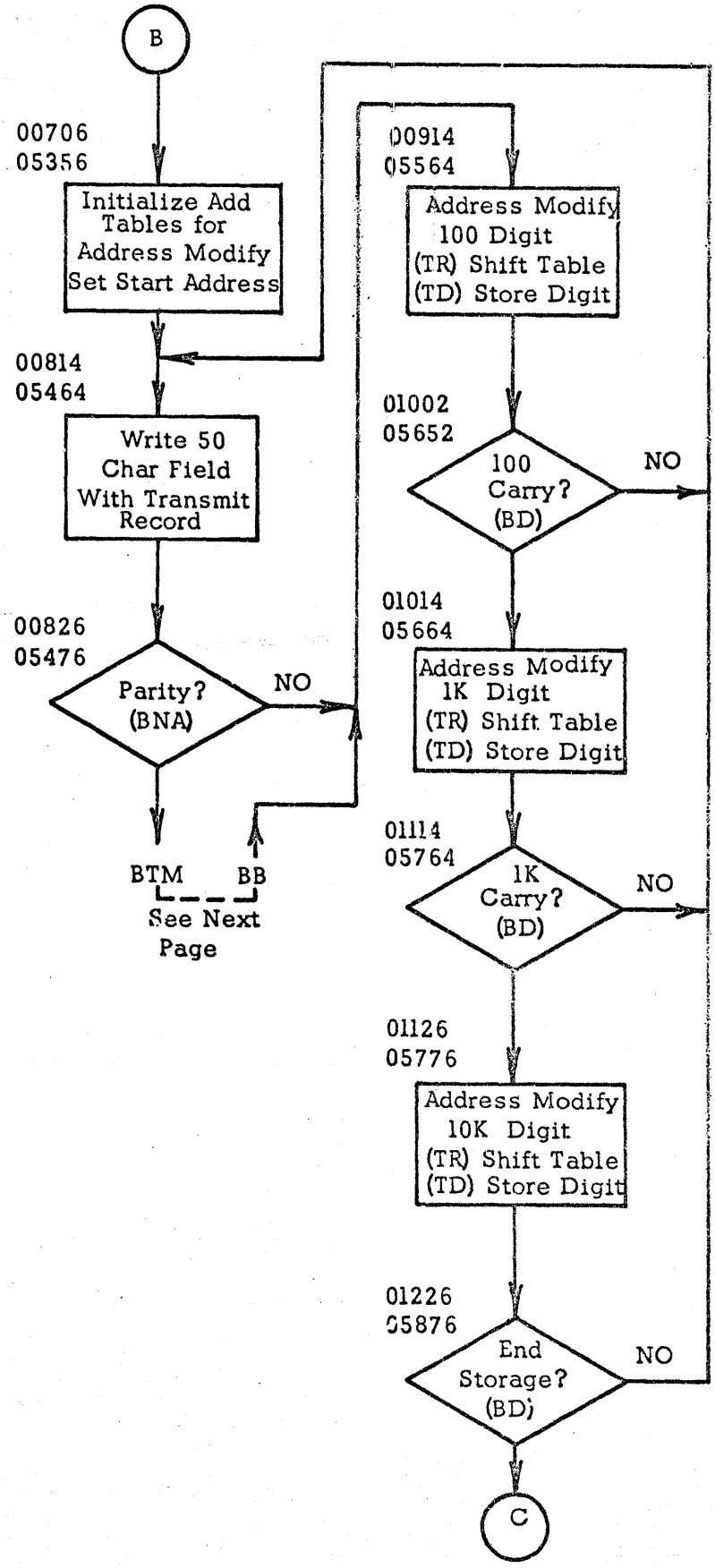
B
00706
05356
Initialize Add Tables for Address Modify Set Start Address
00814
05464
Write 50 Char Field With Transmit Record
00826
05476
Parity? (BNA)
NO
BTM
BB
See Next Page
00914
05564
Address Modify 100 Digit (TR) Shift Table (TD) Store Digit
01002
05652
100 Carry? (BD)
NO
01014
05664
Address Modify 1K Digit (TR) Shift Table (TD) Store Digit
01114
05764
1K Carry? (BD)
NO
01126
05776
Address Modify 10K Digit (TR) Shift Table (TD) Store Digit
01226
05876
End Storage? (BD)
NO
C

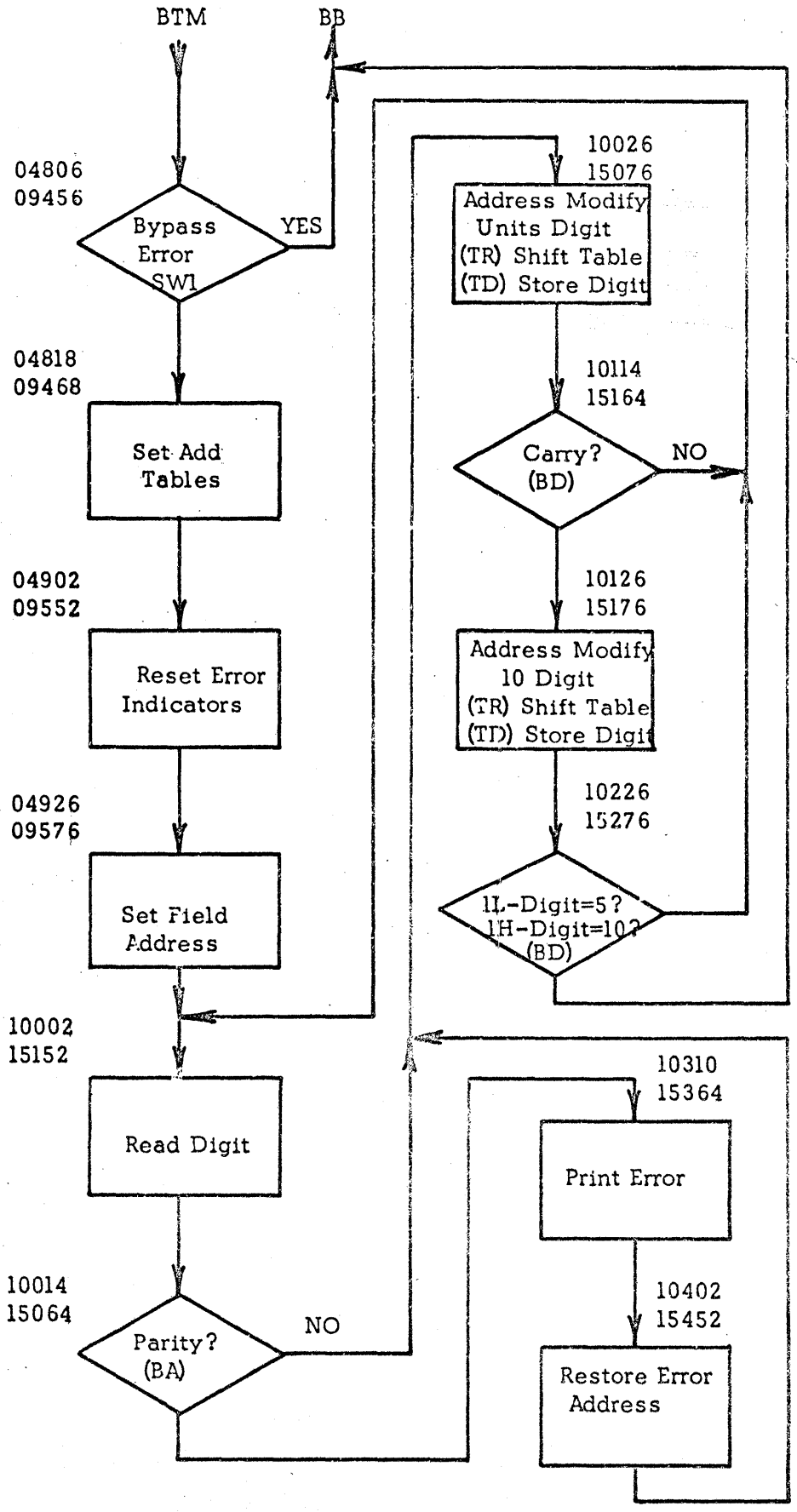
BTM
BB
04806
09456
Bypass Error SW1
YES
04818
09468
Set Add Tables
04902
09552
Reset Error Indicators
04926
09576
Set Field Address
10002
15152
Read Digit
10014
15064
Parity? (BA)
NO
10026
15076
Address Modify Units Digit (TR) Shift Table (TD) Store Digit
10114
15164
Carry? (BD)
NO
10126
15176
Address Modify 10 Digit (TR) Shift Table (TD) Store Digit
10226
15276
1L-Digit=5? 1H-Digit=10? (BD)
10310
15364
Print Error
10402
15452
Restore Error Address

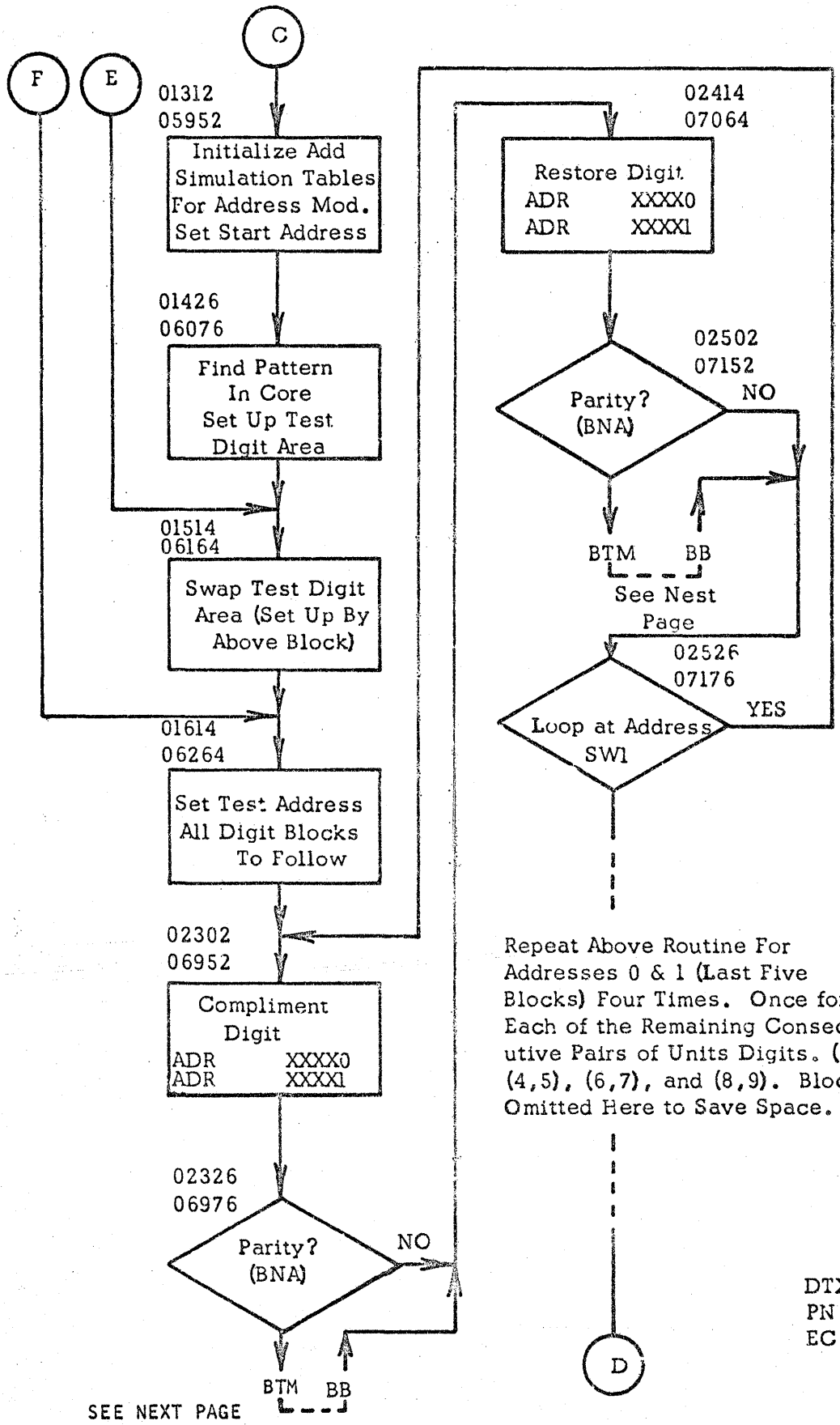
C
F
E
01312
05952
Initialize Add Simulation Tables For Address Mod. Set Start Address
01426
06076
Find Pattern In Core Set Up Test Digit Area
01514
06164
Swap Test Digit Area (Set Up By Above Block)
01614
06264
Set Test Address All Digit Blocks To Follow
02302
06952
Compliment Digit
ADR XXXX0
ADR XXXX1
02326
06976
Parity? (BNA)
NO
BTM
BB
SEE NEXT PAGE
02414
07064
Restore Digit
ADR XXXX0
ADR XXXX1
02502
07152
Parity? (BNA)
NO
BTM
BB
See Nest Page
02526
07176
Loop at Address SW1
YES
Repeat Above Routine For Addresses 0 & 1 (Last Five Blocks) Four Times. Once for Each of the Remaining Consecutive Pairs of Units Digits. (2, 3), (4,5), (6,7), and (8,9). Blocks Omitted Here to Save Space.
D

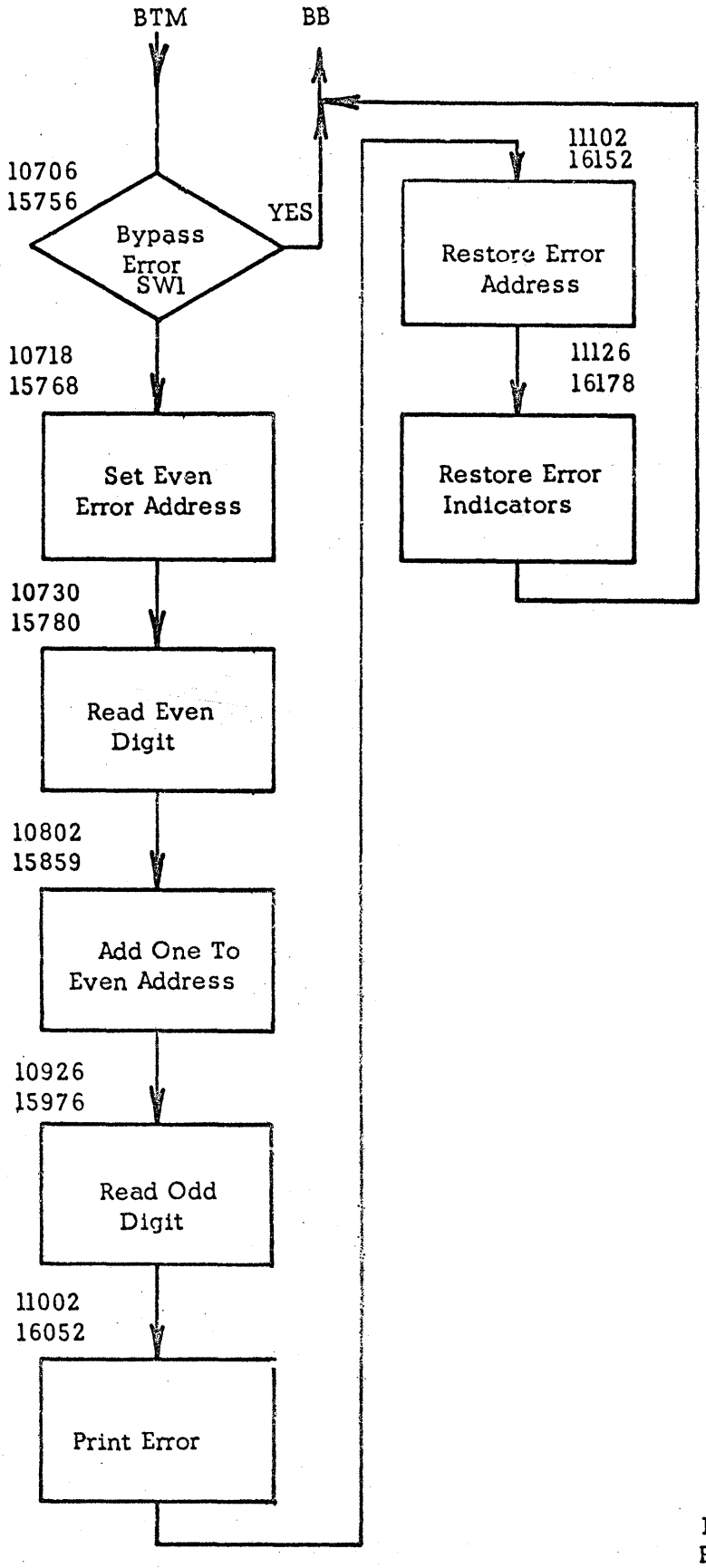
BTM
BB
10706
15756
Bypass
Error
SW1
YES
11102
16152
Restore Error
Address
11126
16178
Restore Error
Indicators
10718
15768
Set Even
Error Address
10730
15780
Read Even
Digit
10802
15859
Add One To
Even Address
10926
15976
Read Odd
Digit
11002
16052
Print Error

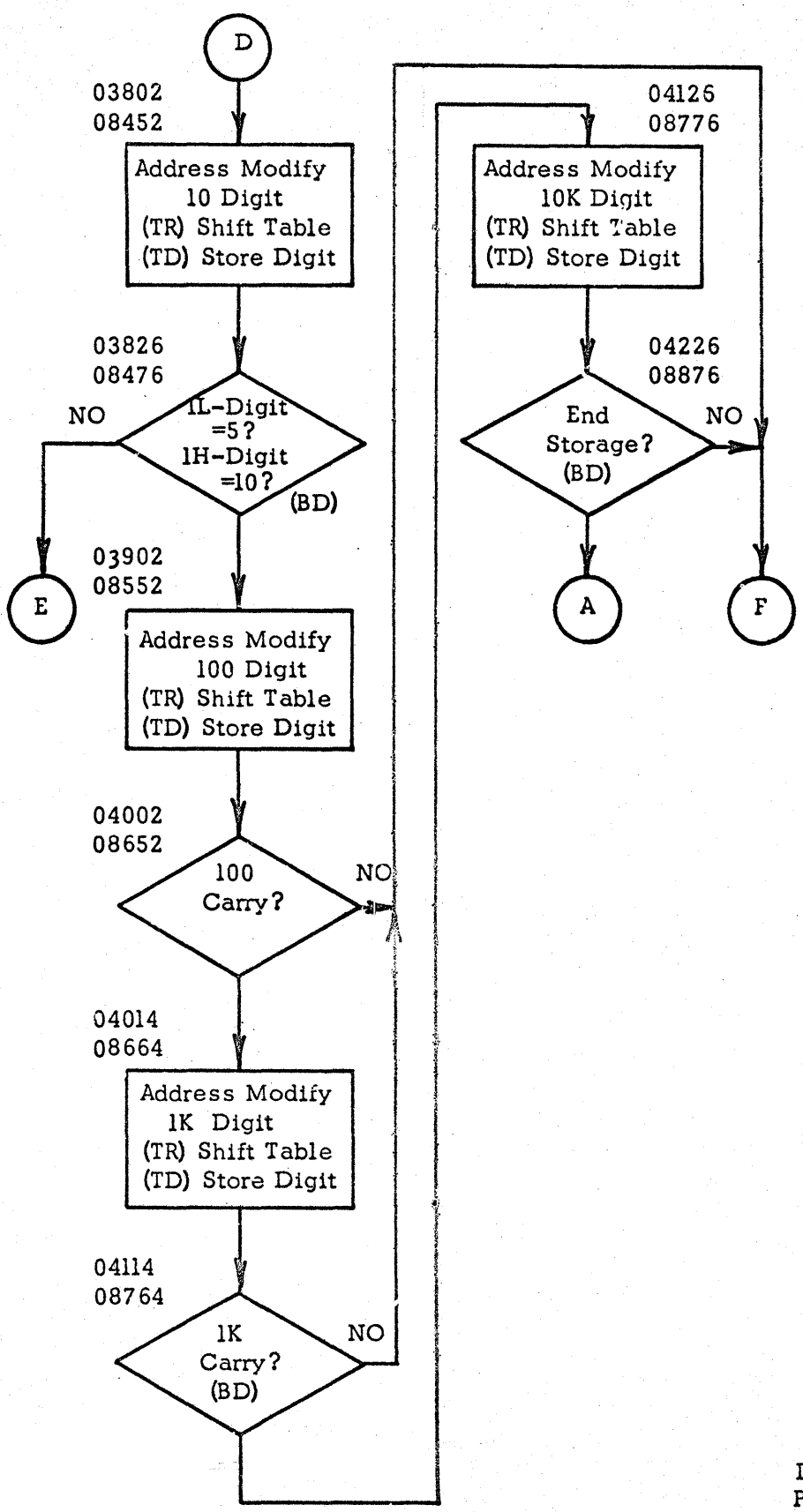
D
03802
08452
Address Modify
10 Digit
(TR) Shift Table
(TD) Store Digit
03826
08476
1L-Digit
=5?
1H-Digit
=10?
(BD)
NO
E
03902
08552
Address Modify
100 Digit
(TR) Shift Table
(TD) Store Digit
04002
08652
100
Carry?
NO
04014
08664
Address Modify
1K Digit
(TR) Shift Table
(TD) Store Digit
04114
08764
1K
Carry?
(BD)
NO
04126
08776
Address Modify
10K Digit
(TR) Shift Table
(TD) Store Digit
04226
08876
End
Storage?
(BD)
NO
A
F

```
                                *          DTX05L
                                *          1620 MEMORY TEST 20K MACHINE
                                *
                                *
                                *
                                *          THIS FIRST PART KEEPS TRACK OF WHICH PATTERN IS
                                *          TO BE WRITTEN NEXT AND GENERATES SAME IN LOWEST
                                *          TESTED AREA IN STORAGE 00-49 FOR 1L 50-99 FOR 1H
05052                                    DORG 5052
05052 16 05355 -0000            RCA      TFM  RTCF,,,       RESET ROUTINE COUNT
05064 49 09352 00000                     B    HEAD
05076 43 09252 05354            RCB      BD   EXIT,RTCF-1,, EXIT
05088 49 05152 00000                     B    RCC
05152                                    DORG *+53
05152 43 05252 05355            RCC      BD   RCD,RTCF,,    BR PASS TWO 8877
05164 31 00000 08952                     TR   ,TP1,,        SET UP
05176 31 00026 08954                     TR   26,TP1+2,,    7788 TEST
05188 17 05356 -0001                     BTM  IA,1,
05252                                    DORG *+53
05252 31 00000 09052            RCD      TR   ,TP2,,        SET UP
05264 31 00026 09054                     TR   26,TP2+2,,    8877 TEST
05276 17 05356 -0010                     BTM  IA,10,
05288 41 00000 00000                     NOP
05351                                    DORG *+52
                                *
                                *          WRITE PATTERN THROUGH STORAGE
                                *          IN BLOCKS OF 50 WITH TRANSMIT RECORD
                                *
05355    00005                   RTCF     DC   5,0,
05356 31 09163 08981            IA       TR   AAD,KAD,,     INITIALIZE
05368 31 09188 08981                     TR   BAD,KAD,,     ADD
05380 31 09084 08995                     TR   CAD,KCAD,,    SIMULATION TABLES
05392 49 05452 00000                     B    PUA
05452                                    DORG *+49
05452 16 05470 -0000            PUA      TFM  WTR+6,,,      SET START ADR
05464 31 00000 00000            WTR      TR   ,,,           WRITE FROM 00-49 INTO XXX00-XXX49
05476 47 05564 01900                     BNA  AMA
05488 49 05552 00000                     B    PUB
05552                                    DORG *+53
05552 27 09556 05470            PUB      BT   ER,WTR+6,,    ERROR
                                *
                                *          THIS ROUTINE STEPS THE TRANSMIT RECORD ADDRESS IN
                                *          INCREMENTS OF 100
                                *
05564 31 09162 09163            AMA      TR   AAD-1,AAD,,   STEP 100
05576 25 05468 09163                     TD   WTR+4,AAD,,   SET 100
05588 49 05652 00000                     B    AMB
05652                                    DORG *+53
05652 43 05464 09163            AMB      BD   WTR,AAD,,     BR NO CARRY
05664 31 09163 08981                     TR   AAD,KAD,,     RESTORE 100
05676 31 09187 09188                     TR   BAD-1,BAD,,   STEP 1K
05688 49 05752 00000                     B    AMC
05752                                    DORG *+53
05752 25 05467 09188            AMC      TD   WTR+3,BAD,,   SET 1K
05764 43 05464 09188                     BD   WTR,BAD,,     BR NO CARRY
05776 31 09188 08981                     TR   BAD,KAD,,     RESTORE 1K
05788 49 05852 00000                     B    AMD
05852                                    DORG *+53
05852 31 09083 09084            AMD      TR   CAD-1,CAD,,   STEP 10K
```

```
05864 25 05466 09084                TD    WTR+2,CAD,,    SET 10K
05876 43 05464 09084                BD    WTR,CAD,,      NO BR ON END MEM
05888 49 05952 00000                B     HKL
05952                               DORG  *+53
                                    *
                                    *        COMPLEMENT AND RESTORE THE PATTERN DIGIT BY DIGIT
                                    *
                                    *        FIRST SET UP STARTING ADDRESSES
                                    *
05952 15 06957 00005        HKL     TDM   WRA+5,5,,      SET STARTING ADDRESS
05964 31 15789 06891                TR    RAD,KRAD,,     INITIALIZE
05976 31 09188 08981                TR    SAD,KAD,,      ADD
05988 49 06052 00000                B     HKM
06052                               DORG  *+53
06052 31 09163 08981        HKM     TR    TAD,KAD,,      SIMULATION
06064 31 09084 08995                TR    UAD,KCAD,,     TABLES
06076 25 06963 00000                TD    X,,,           INITIALIZE X
06088 49 06152 00000                B     HKN
06152                               DORG  *+53
06152 25 07263 00002        HKN     TD    Y,2,,          INITIALIZE Y
06164 25 06263 06963        HKP     TD    XS,X,,         SWAP
06176 25 06963 07263                TD    X,Y,,          TEST
06188 49 06252 00000                B     HKQ
06252                               DORG  *+53
06252 15 07263 00000        HKQ     TDM   Y,,,           DIGITS
06263    00000              XS      DS    ,*
                                    *
                                    *        THE SUCEEDING ARRAY OF TRANSMIT FIELD INSTRUCTIONS
                                    *        ARE USED TO UPDATE THE CURRENT ADDRESS IN THE FOLLOWING
                                    *        COMPLEMENT AND-RESTORE ROUTINE
                                    *
06264 26 06969 06957        HKQ1    TF    WRB+5,WRA+5,, SET ADR
06276 26 07069 06957                TF    WRE+5,WRA+5,,
06288 49 06352 00000                B     HKS
06352                               DORG  *+53
06352 26 07257 06957        HKS     TF    WRG+5,WRA+5,,
06364 26 07081 06957                TF    WRF+5,WRA+5,,
06376 26 07269 06957                TF    WRH+5,WRA+5,,
06388 49 06452 00000                B     HKU
06452                               DORG  *+53
06452 26 07557 06957        HKU     TF    WRN+5,WRA+5,,
06464 26 07369 06957                TF    WRL+5,WRA+5,,
06476 26 07381 06957                TF    WRM+5,WRA+5,,
06488 49 06552 00000                B     HKV
06552                               DORG  *+53
06552 26 07569 06957        HKV     TF    WRP+5,WRA+5,,
06564 26 07669 06957                TF    WRS+5,WRA+5,,
06576 26 07681 06957                TF    WRT+5,WRA+5,,
06588 49 06652 00000                B     HKW
06652                               DORG  *+53
06652 26 07857 06957        HKW     TF    WRU+5,WRA+5
06664 26 07869 06957                TF    WRV+5,WRA+5
06676 26 07969 06957                TF    WRY+5,WRA+5,,
06688 49 06752 00000                B     HKY
06752                               DORG  *+53
06752 26 08157 06957        HKY     TF    WRAA+5,WRA+5,,
06764 26 08169 06957                TF    WRBA+5,WRA+5,,
06776 26 07981 06957                TF    WRZ+5,WRA+5,,
06788 49 06852 00000                B     HKZ
```

```
06852                                   DORG *+53
06852 26 08269 06957        HKZ         TF    WREA+5,WRA+5,,
06864 26 08281 06957                    TF    WRFA+5,WRA+5,,
06876 49 06952 00000                    B     WRA
06886    00000              TST         DS    ,*-1
06888 41 00000 00000                    NOP
06891    00007              KRAD        DSC   7,012340',*-8
06891    00000              KEAD        DS    ,KRAD
06952                                   DORG *+53
                            *
                            *           NOW WE ACTUALLY COMPLEMENT AND RESTORE THE TESTED DIGIT
                            *           THE BIG LOOP IS USED TO SPEED UP THE PROGRAM WHICH
                            *           WOULD BE IMPOSSIBLY SLOW WITH A ONE ADDRESS AT A TIME LOO
                            *
06952 15 -0000 00000        WRA         TDM   0,,2,           WR COMP 0
06963    00000              X           DS    ,*
06964 25 00001 06963        WRB         TD    1,X,,           WR COMP 1
06976 47 07064 01900                    BNA   WRE
06988 49 07052 00000                    B     WRC1
07052                                   DORG *+53
07052 27 15856 06958        WRC1        BT    ERR,WRA+6,,     ERROR
07064 25 00000 07263        WRE         TD    0,Y,,           RESTORE 0
07076 25 00001 07263        WRF         TD    1,Y,,           RESTORE 1
07088 49 07152 00000                    B     WRF1
07152                                   DORG *+53
07152 47 07176 01900        WRF1        BNA   WRF2
07164 27 15856 07070                    BT    ERR,WRE+6,,     ERROR
07176 46 06952 00200        WRF2        BC2   WRA,,,          LOOP
07188 49 07252 00000                    B     WRG
07252                                   DORG *+53
07252 15 00002 07263        WRG         TDM   2,Y,,           WR COMP 2
07263    00000              Y           DS    ,*
07264 25 00003 07263        WRH         TD    3,Y,,           WR COMP 3
07276 47 07364 01900                    BNA   WRL
07288 49 07352 00000                    B     WRH1
07352                                   DORG *+53
07352 27 15856 07258        WRH1        BT    ERR,WRG+6,,     ERROR
07364 25 00002 06963        WRL         TD    2,X,,           RESTORE 2
07376 25 00003 06963        WRM         TD    3,X,,           RESTORE 3
07388 49 07452 00000                    B     WRM1
07452                                   DORG *+53
07452 47 07476 01900        WRM1        BNA   WRM2
07464 27 15856 07370                    BT    ERR,WRL+6,,     ERROR
07476 46 07252 00200        WRM2        BC2   WRG,,,          LOOP
07488 49 07552 00000                    B     WRN
07552                                   DORG *+53
07552 25 00004 06963        WRN         TD    4,X,,           WR COMP 4
07564 25 00005 06963        WRP         TD    5,X,,           WR COMP 5
07576 47 07664 01900                    BNA   WRS
07588 49 07652 00000                    B     WRP1
07652                                   DORG *+53
07652 27 15856 07558        WRP1        BT    ERR,WRN+6,,     ERROR
07664 25 00004 07263        WRS         TD    4,Y,,           RESTORE 4
07676 25 00005 07263        WRT         TD    5,Y,,           RESTORE 5
07688 49 07752 00000                    B     WRT1
07752                                   DORG *+53
07752 47 07776 01900        WRT1        BNA   WRT2
07764 27 15856 07670                    BT    ERR,WRS+6,,,    ERROR
07776 46 07552 00200        WRT2        BC2   WRN,,,          LOOP
```

```
07788 49 07852 00000              B     WRU
07852                             DORG  *+53
07852 25 00006 07263        WRU   TD    6,Y,,          WR COMP 6
07864 25 00007 07263        WRV   TD    7,Y,,          WR COMP 7
07876 47 07964 01900              BNA   WRY
07888 49 07952 00000              B     WRV1
07952                             DORG  *+53
07952 27 15856 07858        WRV1  BT    ERR,WRU+6,,    ERROR
07964 25 00006 06963        WRY   TD    6,X,,          RESTORE 6
07976 25 00007 06963        WRZ   TD    7,X,,          RESTORE 7
07988 49 08052 00000              B     WRZ1
08052                             DORG  *+53
08052 47 08076 01900        WRZ1  BNA   WRZ2
08064 27 15856 07970              BT    ERR,WRY+6,,    ERROR
08076 46 07852 00200        WRZ2  BC2   WRU,,,         LOOP
08088 49 08152 00000              B     WRAA
08152                             DORG  *+53
08152 25 00008 06963        WRAA  TD    8,X,,          WR COMP 8
08164 25 00009 06963        WRBA  TD    9,X,,          WR COMP 9
08176 47 08264 01900              BNA   WREA
08188 49 08252 00000              B     WRBA1
08252                             DORG  *+53
08252 27 15856 08158        WRBA1 BT    ERR,WRAA+6,,   ERROR
08264 25 00008 07263        WREA  TD    8,Y,,          RESTORE 8
08276 25 00009 07263        WRFA  TD    9,Y,,          RESTORE 9
08288 49 08352 00000              B     WRFA1
08352                             DORG  *+53
08352 47 08376 01900        WRFA1 BNA   WRFA2
08364 27 15856 08270              BT    ERR,WREA+6,,   ERROR
08376 46 08152 00200        WRFA2 BC2   WRAA,,,        LOOP
08388 49 08452 00000              B     ASRA
08452                             DORG  *+53
                            *
                            *        THIS SECTION STEPS THE ADDRESS OF THE COMPLEMENT AND
                            *        RESTORE LOOP
                            *
08452 31 15788 15789        ASRA  TR    RAD-1,RAD,,    STEP TENS
08464 25 06957 15789              TD    WRA+5,RAD,,    SET TENS
08476 43 06164 15789              BD    HKP,RAD,,      BR NO CARRY
08488 49 08552 00000              B     ASRB
08552                             DORG  *+53
08552 31 15789 06891        ASRB  TR    RAD,KRAD,,     RESTORE
08564 31 09187 09188              TR    SAD-1,SAD,,    STEP 100
08576 25 06956 09188              TD    WRA+4,SAD,,    SET 100
08588 49 08652 00000              B     ASRC
08652                             DORG  *+53
08652 43 06264 09188        ASRC  BD    HKQ1,SAD,,     BR NO CARRY
08664 31 09188 08931              TR    SAD,KAD,,      RESTORE 100
08676 31 09162 09163              TR    TAD-1,TAD,,    STEP 1K
08688 49 08752 00000              B     ASRD
08752                             DORG  *+53
08752 25 06955 09163        ASRD  TD    WRA+3,TAD,,    SET 1K
08764 43 06264 09163              BD    HKQ1,TAD,,     BR NO CARRY
08776 31 09163 08981              TR    TAD,KAD,,      RESTORE 1K
08788 49 08852 00000              B     ASRE
08852                             DORG  *+53
08852 31 09083 09084        ASRE  TR    UAD-1,UAD,,    STEP 10K
08864 25 06954 09084              TD    WRA+2,UAD,,    SET 10K
08876 43 06264 09084              BD    HKQ1,UAD,,     BR NO CARRY
```

```
08888 49 05076 00000                B     RCB
08952                               DORG  *+53
                                    *
                                    *        CONSTANTS AND ARITHMETIC WORKING AREAS
                                    *
08952     00027                     TP1   DSS   27,,           FIELD OF 7788
08951                               DORG  *-27
08954     00004                           DC    4,-8778
08958     00004                           DC    4,-8778
08962     00004                           DC    4,-8778
08966     00004                           DC    4,-8778
08970     00004                           DC    4,-8778
08974     00004                           DC    4,-8778
08978     00004                           DC    4,877'
08981     00013                     KAD   DSC   13,012345678901',TP1+29
08995     00004                     KCAD  DSC   4,010',TP1+43
08997     00002                           DC    2,-10,KCAD+2
09052                               DORG  TP1+100
09052     00027                     TP2   DSS   27,,           FIELD OF 8877
09052                               DORG  *-26
09052     00001                           DC    1,8
09056     00004                           DC    4,-8778
09060     00004                           DC    4,-8778
09064     00004                           DC    4,-8778
09068     00004                           DC    4,-8778
09072     00004                           DC    4,-8778
09076     00004                           DC    4,-8778
09078     00002                           DC    2,8'
09163     00013                     AAD   DSS   13,TP2+111,    100 ADD WORK AREA
09188     00012                     BAD   DSS   12,AAD+25,     1K ADD WORK AREA
09084     00004                     CAD   DSS   4,TP2+32,      10K ADD WORK AREA
09163     00000                     TAD   DSS   ,AAD
09188     00000                     SAD   DSS   ,BAD
09084     00000                     UAD   DSS   ,CAD
09252                               DORG  AAD+89
                                    *
                                    *                        PASS COUNTER
                                    *
09252 39 09453 00100                EXIT  WATY  PCNT,,,        PRINT PASS COMPLETE
09264 46 05052 00400                      BC4   RCA
09276 36 00000 00500                      RNCD  ,,,            READ NEXT PROGRAM
09288 49 00000 00000                      B
09352                               DORG  EXIT+100
09352 34 00000 00102                HEAD  RCTY
09364 39 09481 00100                      WATY  HD,,,          PRINT FARSE 1
09376 34 00000 00102                      RCTY
09388 49 05076 00000                      B     RCB
09452                               DORG  HEAD+100
09453     00014                     PCNT  DAC   14,PASS COMPLETE',
09481     00007                     HD    DAC   7,DTX05L',
09551                               DORG  PCNT+98
                                    *
                                    *        ERROR ROUTINE- ERROR WHILE WRITING PATTERN
                                    *
09555     00005                     ERRX  DC    5,0,
09556 46 15388 00100                ER    BC1   BB,,,          BYPASS ERROR
09568 31 16587 08981                      TR    DAD,KAD,,      SET ADD CONSTANTS
09580 31 15789 06891                      TR    EAD,KEAD
09592 49 15052 00000                      B     ERA
```

```
15052                                DORG 15052
15052 47 15064 51655        ERA      BNI  ERA1,51655,, RESET MBR-E CHECK IND
15064 47 15076 51755        ERA1     BNI  ERA2,51755,, RESET MBR-O CHECK IND
15076 26 15163 09555        ERA2     TF   CTD+11,ERRX,, SET ERROR FIELD ADDRESS
15088 49 15152 00000                 B    CTD
15152                                DORG *+53
15152 25 16688 -0000        CTD      TD   PRC,,7,        READ DIGIT
15164 46 15452 01900                 BA   ERD,,,         ERROR
15176 31 16586 16587        CTD2     TR   DAD-1,DAD,,    STEP UNIT ADR
15188 49 15252 00000                 B    ERB
15252                                DORG *+53
15252 25 15163 16587        ERB      TD   CTD+11,DAD
15264 43 15152 16587                 BD   CTD,DAD
15276 31 16587 08981                 TR   DAD,KAD,,      RESTORE UNITS
15288 49 15352 00000                 B    ERC
15352                                DORG *+53
15352 31 15788 15789        ERC      TR   EAD-1,EAD,,    STEP TENS
15364 25 15162 15789                 TD   CTD+10,EAD
15376 43 15152 15789                 BD   CTD,EAD,,      BR NO CARRY
15388 42 00000 00000        BB       BB   ,,,            RETURN
15452                                DORG *+53
15452 26 16686 15163        ERD      TF   PRA+4,CTD+11,,SET ERROR ADDRESS
15464 38 16688 00100                 WNTY PRC,,,         PRINT ERROR CHAR
15476 26 15558 15163                 TF   ERE+6,CTD+11
15488 49 15552 00000                 B    ERE
15552                                DORG *+53
15552 25 0-000 16688        ERE      TD   ,PRC,3,        RESTORE ADR
15564 47 15576 50755                 BNI  ERE1,50755,, RESET WRITE CHECK IND
15576 47 15652 51755        ERE1     BNI  ERF,51755,,    RESET MBR-U CHECK IND
15588 49 15652 00000                 B    ERF
15652                                DORG *+53
15652 47 15664 51655        ERF      BNI  ERF1,51655,, RESET MBR-E CHECK IND
15664 39 16753 00100        ERF1     WATY PRB
15676 38 16682 00100                 WNTY PRA,,,         PRINT ERROR ADR
15688 49 15752 00000                 B    ERG
15752                                DORG *+53
15752 39 16653 00100        ERG      WATY PR
15764 34 00000 00102                 RCTY
15776 49 15176 00000                 B    CTD2
15789    00007              EAD      DSS  7,*+2
15789    00000              RAD      DSS  ,EAD
15788 41 00000 00000                 NOP
15851                                DORG *+52
                            *
                            *          ERROR ROUTINE - ERROR DURING COMPLIMENT OR RESTORE
                            *
15855    00005              ERRY     DC   5,0,
15856 46 16564 00100        ERR      BC1  RET,,,         BYPASS ERROR
15868 26 15891 15855                 TF   ERR1+11,ERRY,,SET EVEN ERROR ADDRESS
15880 25 15973 00000        ERR1     TD   PRJ,,,         READ EVEN DIGIT
15892 49 15952 00000                 B    ERRJ
15951                                DORG *+48
15952 25 16063 15855        ERRJ     TD   ERRK+11,ERRY,,SET ADD TABLE ADDRESS
15964 49 16052 00000                 B    ERRK
15973    00002              PRJ      DSS  2,*-2
15975    00001                       DC   1,',*
15976 41 00000 00000                 NOP
15988 41 00000 00000                 NOP
15990    00009              KHAD     DSC  9,123456789,*-9
```

```
16052                                  DORG *+53
16052 25 15855 15990          ERRK     TD   ERRY,KHAD,,    READ TABLE
16064 26 16087 15855                   TF   ERK1+11,ERRY,,SET ODD ERROR ADDRESS
16076 25 15974 00000          ERK1     TD   PRJ+1,,,       READ ODD DIGIT
16088 49 16152 00000                   B    ERRL
16152                                  DORG *+53
16152 38 15973 00100          ERRL     WNTY PRJ,,,         PRINT ERROR DIGITS
16164 26 16258 15891                   TF   ERRM+6,ERR1+11
16176 26 16270 16087                   TF   ERM1+6,ERK1+11
16188 49 16252 00000                   B    ERRM
16252                                  DORG *+53
16252 25 00000 15973          ERRM     TD   ,PRJ,,         RESTORE ERROR DIGITS
16264 25 00000 15974          ERM1     TD   ,PRJ+1
16276 47 16352 50755                   BNI  ERRN,50755,,   RESTORE CHECK IND
16288 49 16352 00000                   B    ERRN,
16352                                  DORG *+53
16352 47 16364 51755          ERRN     BNI  ERN1,51755
16364 47 16376 51655          ERN1     BNI  ERN2,51655
16376 39 16753 00100          ERN2     WATY PRB
16388 49 16452 00000                   B    ERRP
16452                                  DORG *+53
16452 26 16573 15891          ERRP     TF   ERY1+4,ERR1+11,,SET ERROR ADDRESS FOR PRINT
16464 38 16569 00100                   WNTY ERY1,,,       PRINT ERROR ADR
16476 39 16653 00100                   WATY PR
16488 49 16552 00000                   B    ERRQ
16552                                  DORG *+53
16552 34 00000 00102          ERRQ     RCTY
16564 42 00000 00000          RET      BB   ,,,            RETURN
                              *
                              *          CONSTANTS AND ARITHMETIC WORKING AREAS
                              *
16569    00006                ERY1     DSC  6,',*-6
16576 41 00000 00000                   NOP
16587    00012                DAD      DSS  12,*
16588 41 00000 00000                   NOP
16652                                  DORG ERRQ+100
16653    00015                PR       DAC  15, IS ERROR ADR ',
16682    00005                PRA      DSS  5
16687    00001                         DC   1,'
16688    00001                PRC      DSS  1
16689    00001                         DC   1,'
16752                                  DORG PR+99
16753    00014                PRB      DAC  14, IS ERR CHAR ',
05052                                  DEND 5052
```

DT X05L 80/80 LIST

```
360007200500360020100500440001200276260005900274250001100000260009000269   -0000
260009500264310000000200260011400274250000000011490001200000                -0001
250726300002250626306963250696307263490625200000‡                0-1-6152-6200 -0002
1605355-000049093520000043092520535449051520000‡                 0-1-5052-5100 -0003
430525205355310000008952310002608954170535 6-0001‡               0-1-5152-5200 -0004
310000009052310002609054170535 6-0010410000000000‡               0-1-5252-5300 -0005
-0000‡                                                           1-1-5351-5356 -0006
310916308981310918808981310908408995490545200000‡                0-1-5356-5404 -0007
1605470-000031000000000470556401900490555200000‡                 0-1-5452-5500 -0008
270955605470310916209163250546809163490565200000‡                0-1-5552-5600 -0009
430546409163310916308981310918709188490575200000‡                0-1-5652-5700 -0010
250546709188430546409188310918808981490585200000‡                0-1-5752-5800 -0011
310908309084250546609084430546409084490595200000‡                0-1-5852-5900 -0012
150695700005311578906891310918808981490605200000‡                0-1-5952-6000 -0013
310916308981310908408995250696300000490615200000‡                0-1-6052-6100 -0014
250726300002250626306963250696307263490625200000‡                0-1-6152-6200 -0015
150726300000260696906957260706906957490635200000‡                0-1-6252-6300 -0016
260725706957260708106957260726906957490645200000‡                0-1-6352-6400 -0017
260755706957260736906957260738106957490655200000‡                0-1-6452-6500 -0018
260756906957260766906957260768106957490665200000‡                0-1-6552-6600 -0019
260785706957260786906957260796906957490675200000‡                0-1-6652-6700 -0020
260815706957260816906957260798106957490685200000‡                0-1-6752-6800 -0021
260826906957260828106957490695200000410000000000‡               0-1-6852-6900 -0022
012340‡                                                          1-1-6891-6898 -0023
15-000000000250000106963470706401900490705200000‡                0-1-6952-7000 -0024
271585606958250000072632500001072634907152000000‡               0-1-7052-7100 -0025
470717601900271585607070460695200200490725200000‡               0-1-7152-7200 -0026
150000207263250000307263470736401900490735200000‡               0-1-7252-7300 -0027
271585607258250000206963250000306963490745200000‡               0-1-7352-7400 -0028
470747601900271585607370460725200200490755200000‡               0-1-7452-7500 -0029
250000406963250000506963470766401900490765200000‡               0-1-7552-7600 -0030
271585607558250000407263250000507263490775200000‡               0-1-7652-7700 -0031
470777601900271585607670460755200200490785200000‡               0-1-7752-7800 -0032
250000607263250000707263470796401900490795200000‡               0-1-7852-7900 -0033
271585607858250000606963250000706963490805200000‡               0-1-7952-8000 -0034
470807601900271585607970460785200200490815200000‡               0-1-8052-8100 -0035
250000806963250000906963470826401900490825200000‡               0-1-8152-8200 -0036
271585608158250000807263250000907263490835200000‡               0-1-8252-8300 -0037
470837601900271585608270460815200200490845200000‡               0-1-8352-8400 -0038
311578815789250695715789430616415789490855200000‡               0-1-8452-8500 -0039
311578906891310918709188250695609188490865200000‡               0-1-8552-8600 -0040
430626409188310918808981310916209163490875200000‡               0-1-8652-8700 -0041
250695509163430626409163310916308981490885200000‡               0-1-8752-8800 -0042
310908309084250695409084430626409084490507600000‡               0-1-8852-8900 -0043
Q77QQ77QQ77QQ77QQ77QQ77QQ77‡                                     1-1-8951-8979 -0044
012345678901‡                                                    1-1-8981-8994 -0045
010‡                                                             1-1-8995-8999 -0046
J-‡                                                              1-1-8996-8998 -0047
QQ77QQ77QQ77QQ77QQ77QQ77QQ‡                                      1-1-9052-9079 -0048
390945300100460505200400360000000500490000000000‡               0-1-9252-9300 -0049
340000000102390948100100340000000102490507600000‡               0-1-9352-9400 -0050
N741626200435654575345634 50‡                                    1-1-9452-9480 -0051
M463677075530‡                                                   1-1-9480-9494 -0052
-0000‡                                                           1-1-9551-9556 -0053
461538800100311658708981311578906891491505200000‡               0-1-9556-9604 -0054
471506451655471507651755261516309555491515200000‡               0-1J5052J5100 -0055
2516688-000046154520190031165861658749152 5200000‡              0-1J5152J5200 -0056
251516316587431515216587311658708981491535 2000000‡             0-1J5252J5300 -0057
```

```
3115788157892515162157894315152157894200000000000‡          0-1J5352J5400 -0058
2616686151633816688001002615558151634915552000000‡          0-1J5452J5500 -0059
250-0001668847155765075547156525175549156520000 0‡          0-1J5552J5600 -0060
4715664516553916753001003816682001004915752000 00‡          0-1J5652J5700 -0061
3916653001003400000001024915176000004100000000000‡          0-1J5752J5800 -0062
-0000‡                                                      1-1J5851J5856 -0063
4616564001002615891158552515973000004915952000 00‡          0-1J5856J5904 -0064
2516063158554916052000 00‡                                  0-1J5952J5976 -0065
‡                                                           1-1J5975J5976 -0066
4100000000004100000000000‡                                  0-1J5976J6000 -0067
123456789‡                                                  1-1J5990J5999 -0068
2515855159902616087158552515974000004916152000 00‡          0-1J6052J6100 -0069
3815973001002616258158912616270160874916252000 00‡          0-1J6152J6200 -0070
2500000159732500000159744716352507554916352000 00‡          0-1J6252J6300 -0071
4716364517554716376516553916753001004916452000 00‡          0-1J6352J6400 -0072
2616573158913816569001003916653001004916552000 00‡          0-1J6452J6500 -0073
3400000001024200000000000‡                                  0-1J6552J6576 -0074
00000‡                                                      1-1J6569J6575 -0075
4100000000004100000000000‡                                  0-1J6576J6600 -0076
-0496200455959565900414459000‡                              1-1J6652J6682 -0077
‡                                                           1-1J6687J6688 -0078
‡                                                           1-1J6689J6690 -0079
-0496200455959004348415900 0‡                               1-1J6752J6780 -0080
00000  L600000005004900000‡                                  -8-0096-0115 -0081
3600100005003600172005003600244005003600316005003600000000500              -0082
0000000000001020304000204060800030609021004080216100500151020060218142 00‡  -0083
7041128200806142230090817263000000000050607080900121416181518112427202 42‡  -0084
8223635203530454036324844553249465360484654627544536271801234567891234 56‡  -0085
789-23456789-J3456789-JK456789-JKL56789-JKLM6789-JKLMN789-JKLMN089-JKLMN‡  -0086
M8000000000049-5052OP9-JKLMNOPQ‡    L10038800019M90000000000M900036C0000   -0087
                    DT X05H 80/80 LIST
```