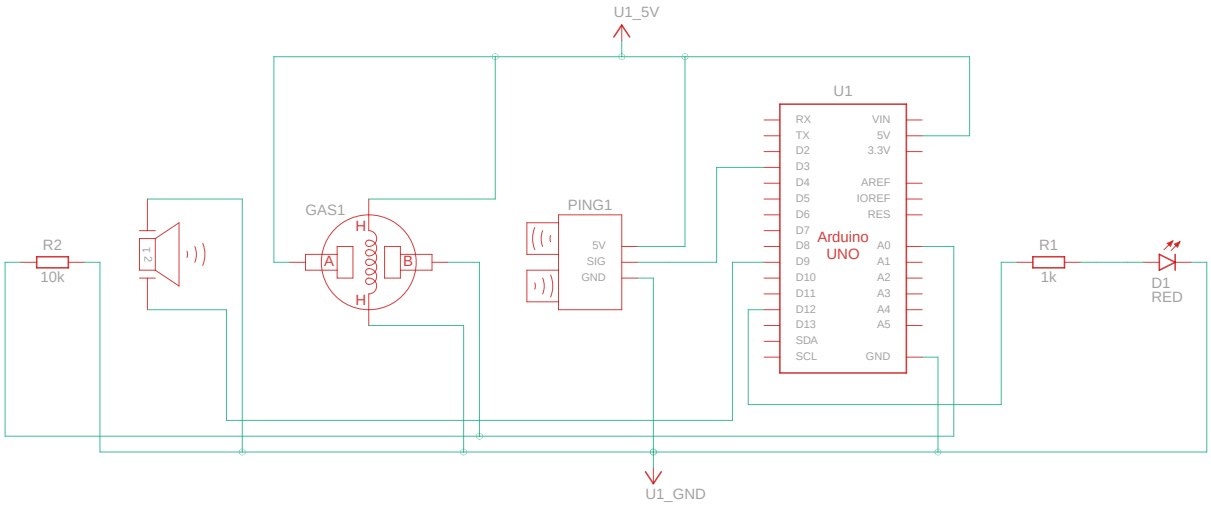

Made with Tinkercad®

Title: Glorious Robo-Maimu

Date: 9/19/2022, 12:25:41 PM

Sheet: 1/1