Team ID	PNT2022TMID12348
Project Name	Smart Waste Management System For Metropolitan Cities

Project Development - Delivery Of Sprint-4

Circuit Diagram:

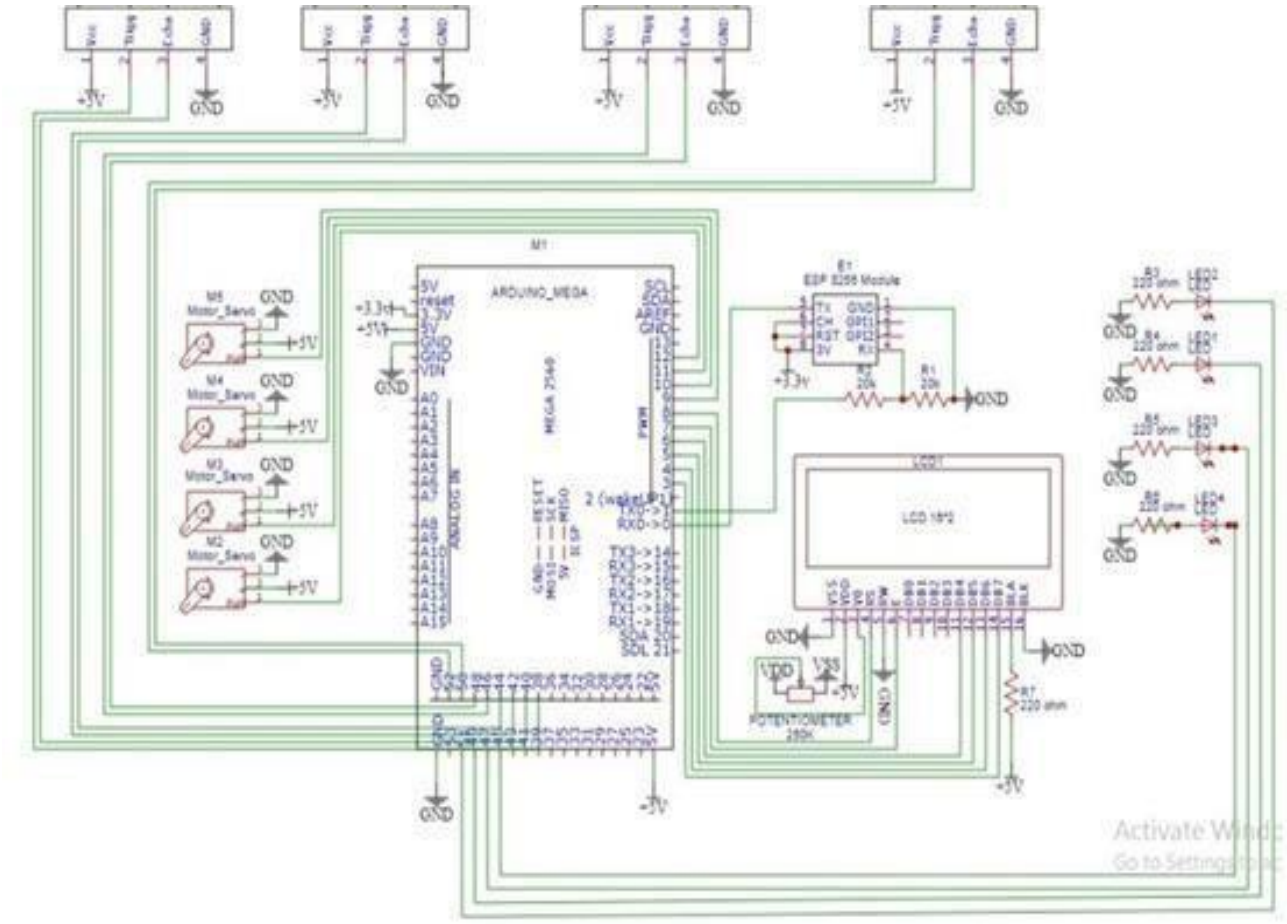

In the above circuit diagram, On the left most side ultrasonic sensor is connected trigg pin = 38 (output) and echo = 40(input). On the left 2nd one ultrasonic sensor is connected trigg pin = 42 (output)and echo = 44(input). On the 3rd ultrasonic sensor is connected trigg pin = 46 (output)and echo = 48(input). On the right most side ultrasonic sensor is connected trigg pin = 52 (output)and echo = 50(input). M2, M3, M4, M5, are servo motors. At M2, pwm=12. At M3, pwm=11. At M4, pwm=10. At M5, pwm=9. LED 2=51 LED 1 =49 LED 3 = 47 LED 4 =45. We use esp 8266. So, the tx is connected to rx 0. And the rx is connected to tx 0. Then the other pin of the 16 *2 LED display.