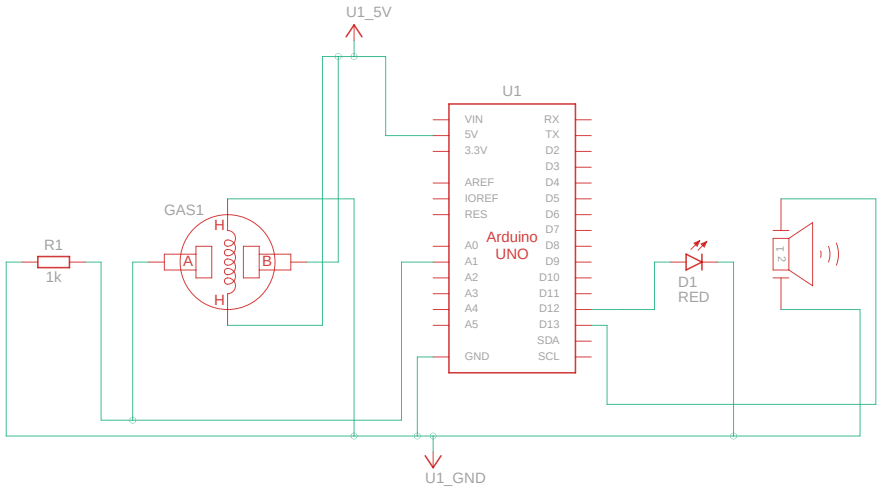

Made with Tinkercad®

Title: Dazzling Leelo-Hango

Date: 11/17/2022, 2:01:26 PM

Sheet: 1/1

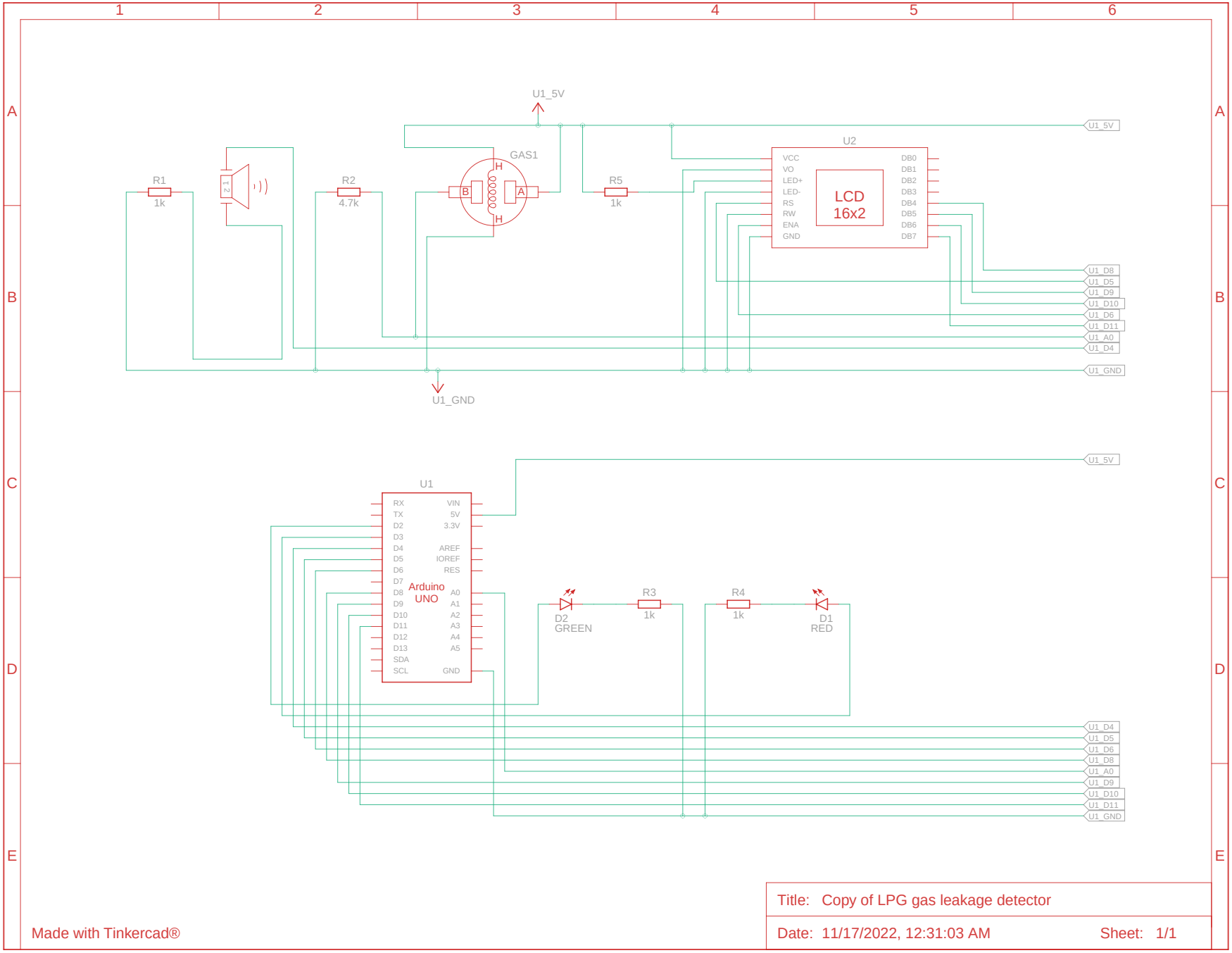

Made with Tinkercad®

Title: Copy of LPG gas leakage detector

Date: 11/17/2022, 12:31:03 AM

Sheet: 1/1