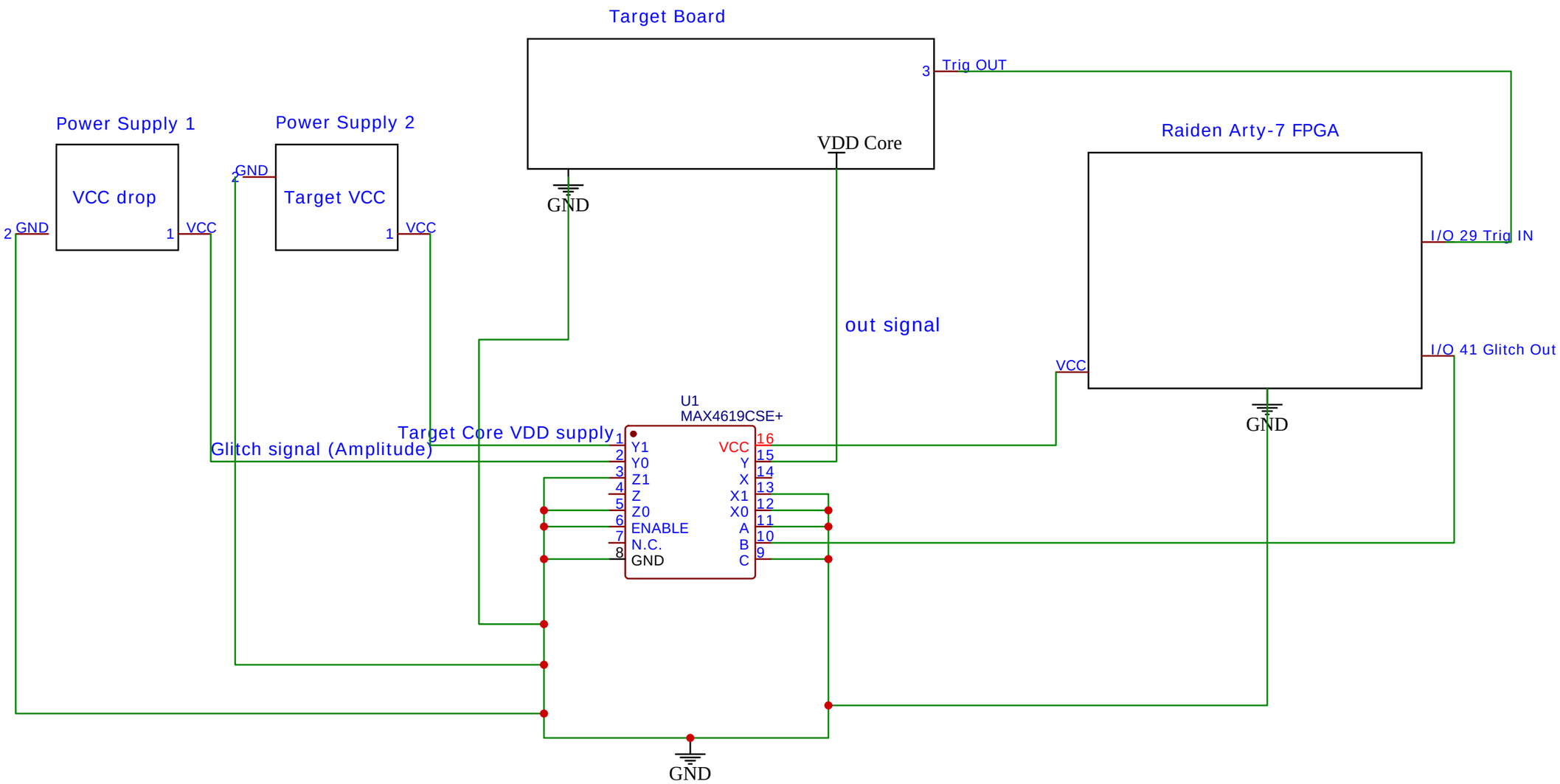

TITLE: Raiden application by Grzegorz Wypych (h0rac)		REV: 1.0
EasyEDA	Company: IBM X-Force Red	Sheet: 1/1
	Date: 2019-12-05 Drawn By:	