TABLE 12.8
Resource cost vs. latency of SLP neural networks.

NNs-STW	Hardware Cost					Latency
	MUL	ADD	SUB	EXP	REC	/(Cycles)
784	798	796	2	2	2	46
196	210	211	2	2	2	81
98	112	117	2	2	2	128
49	63	76	2	2	2	223
28	42	67	2	2	2	366

faster performance, but these trade-offs are typically constrained by factors such as IO limitations, chip size, and power consumption.

B. Design Performance of SLP Neural Networks

The utilization of FP operators and the overall latency of the SLP network are succinctly presented in Table 12.8. The output-layer neuron necessitates 13 FP multipliers and 11 FP adders for cascading product summations. For the various design structures, namely "STW 784", "STW 196", "STW 98", "STW 49", and "STW 28", the corresponding FP multiplier counts are 798, 210, 112, 63, and 42, respectively. Likewise, the FP adder counts are 796, 211, 117, 76, and 67, respectively. The quantities of FP subtractors, exponential functions, and reciprocal operators are doubled. As each output-layer neuron demands 19 clock cycles for execution, the cumulative latency is presented in the final column of the table.

T&F--Not for Distribution

Exercises

Problem 12.1. Utilizing the AMBA AXI protocol, a manager initiates a command to transfer a block of 16 bytes to an associated subordinate memory controller.

1) If the burst size is set to bytes (axsize=3'b000), what value represents the burst length ("axlen")?

2) Given an initial address of "axaddr=32'h14" and a burst type of $FIXED$ ("axburst=2'b00"), what sequence of memory addresses pertains to the remaining data transfers?

3) In the case of a burst type set to INCR ("axburst=2'b01"), which memory addresses correspond to the subsequent data transfers?

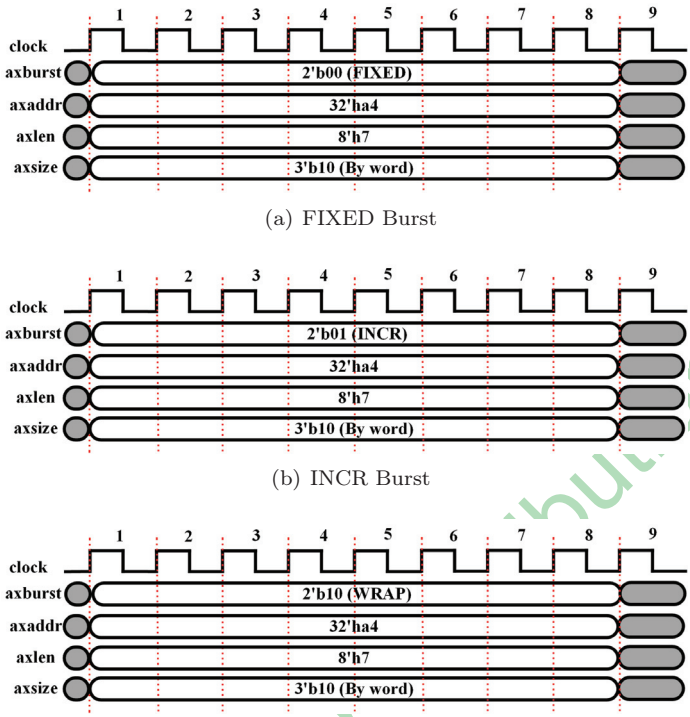

FIGURE 12.27
AXI bus transaction examples.

4) When the burst size is defined in words ("axsize=3'b010"), what burst length ("axlen") value should be used? Additionally, please revisit questions 2) and 3) accordingly.

Problem 12.2. Figure 12.27 represents three distinct bus transactions involving a manager and a subordinate. These transactions encompass a FIXED burst, as depicted in Figure 12.27(a), an INCR burst, visualized in Figure 12.27(b), and finally, a WRAP burst illustrated in Figure 12.27(c).

In each of the three bus transactions, the initial memory address is specified as "axaddr=32'ha4". What are the subsequent memory addresses in the FIXED burst? What are the subsequent memory addresses in the INCR burst? What are the subsequent memory addresses in the WRAP burst?

Problem 12.3. In an AXI bus transaction, the size of each data transfer in bytes is determined by the "axsize". Assuming the CPU configures the memory address as 32'h17 through the AXI bus, the memory address on the hardware side can be aligned with the transfer size as follows:

T&F—Not for Distribution

- If the "axsize" is set to 3'h000, resulting in one byte transferred in each transaction, what memory address on the hardware side corresponds to the configured memory address 32'h17?
- If the "axsize" is configured as binary 3'b001, indicating two bytes transferred in each transaction, what memory address on the hardware side aligns with the configured memory address 32'h17?
- When the "axsize" is set to binary 3'b010, leading to four bytes transferred in each transaction, what memory address on the hardware side aligns with the configured memory address 32'h17?
- Assuming the "axsize" is defined as binary 3'b011, causing eight bytes to be transferred in each transaction, what memory address on the hardware side aligns with the configured memory address 32'h17?
- In the scenario where the "axsize" is specified as binary 3'b100, resulting in 16 bytes transferred in each transaction, what memory address on the hardware side corresponds to the configured memory address 32'h17?
- Given that the "axsize" is set to binary 3'b101, leading to 32 bytes transferred in each transaction, what memory address on the hardware side corresponds to the configured memory address 32'h17?
- If the "axsize" is configured as binary 3'b110, resulting in 64 bytes transferred in each transaction, what memory address on the hardware side corresponds to the configured memory address 32'h17?
- Assuming the "axsize" is set to binary 3'b111, resulting in 128 bytes transferred in each transaction, what memory address on the hardware side corresponds to the configured memory address 32'h17?

Problem 12.4. Figure 12.28 presents two instances of the AXI bus handshaking between an AXI source and an AXI destination. These examples showcase bus transactions involving eight data transfers ("d0-d7"). In Figure 12.28(a), the "ready" signal spans 13 clock cycles, with the initial data transfer ("d0") commencing during the second clock cycle where the "valid" signal is asserted. By clock cycle 13, the "valid" signal is negated, concluding the entire bus transaction. Depict the signal trace for the "valid" signal and the data ("d1" to "d7" inclusive) within clock cycles 3 to 12.

In Figure 12.28(b), the "valid" signal is presented alongside the eight data transfers ("d0-d7") across 13 clock cycles. Additionally, the "ready" signal is indicated during the first and last clock cycles. Illustrate the "ready" signal's profile within the clock cycles spanning from 2 to 12.

T&F--Not for Distribution

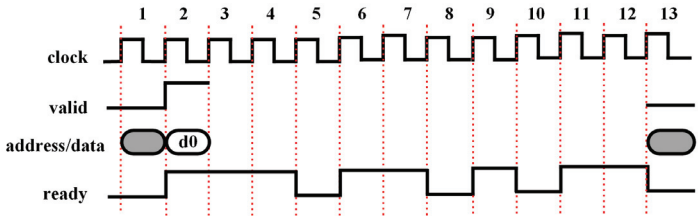

(a) Ready-Valid Handshaking Example #1

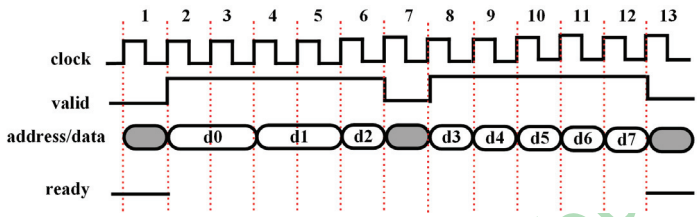

(b) Ready-Valid Handshaking Example #2

FIGURE 12.28
AXI ready-valid handshaking examples.

T&F – Not for Distribution

PBL 42: DMA Arbiter Design

1) Design the DMA Arbiter in accordance with the dynamic priority mechanism illustrated in Figure 12.11. Assume that four masters, denoted as M1, M2, M3, and M4, concurrently initiate requests for bus access, each initially assigned a priority value of one, two, three, and four, respectively. The IO specifications are detailed in Table 12.9, encompassing the request inputs from the four bus masters (labeled as "req1", "req2", "req3", and "req4"), as well as the corresponding grant outputs from the DMA Arbiter, serving as the bus slave for interfacing (designated as "gnt1", "gnt2", "gnt3", and "gnt4").

TABLE 12.9
DMA Arbiter IOs description.

Name	Direction	Bit Width	Description
clk	Input	1	Clock, rising edge, 100 MHz
rst	Input	1	Asynchronous reset, 0 valid
req1–req4	Input	1	M1–M4 requests
gnt1–gnt4	Output	1	M1–M4 grants

2) Create a testbench for conducting simulations of the DMA Arbiter design. The bus functional model, emulating the behavior of the bus master, should initiate requests from M1 to M4, adhering to the timing diagram depicted in Figure 12.13. To be specific, M1 and M2 are expected to transmit a single command each, while M3 and M4 should send three consecutive commands. For the sake of simplicity, the command inputs are not included in this project. After receiving all the grants from the DMA Arbiter, the bus masters should deactivate their requests to complete the request-grant handshake.

PBL 43: FP RGB-to-Grayscale Converter

1) Design the RGB-to-Grayscale Converter depicted in Figure 12.17(a), by leveraging the single-clock-cycle FP adder and multiplier provided in this book.
2) Create a testbench to facilitate the simulation of the converter design and validate its functionality using 4×4 matrix of RGB inputs.

PBL 44: High-Speed Design on FP RGB-to-Grayscale Converter

1) Redesign the circuit in PBL 43 by leveraging the pipeline-designed FP operators provided in this book.
2) Create a testbench to facilitate the simulation of the converter design and validate its functionality using the same 4×4 matrix of RGB inputs in PBL 43.
3) Comments on the difference between PBL 43 using single-clock-cycle IPs and PBL 44 using pipeline-designed IPs.

PBL 45: Integer Designs on RGB-to-Grayscale Converter

1) Design the RGB-to-Grayscale Converter illustrated in Figure 12.17(b)–(f), utilizing Verilog operators "+" and "*" for the binary operators of the adder and multiplier.

T&F–Not for Distribution

TABLE 12.10
Performance evaluation of hardware cost, MOF, and power consumption.

Designs		**Resource Cost**		**MOF (MHz)**	**Power (mW)**
		LUTs	**FFs**		
Floating-Point	**PBL 43: Single-Cycle FP Operators**				
	PBL 44: Pipelined FP Operators				
PBL 45: Fixed-Point	**Design #1**				
	Design #2				
	Design #3				
	Design #4				
	Design #5				
	Design #6				

2) Create a testbench to facilitate the simulation of the converter designs and verify their functionality using the identical 4×4 matrix of RGB inputs in PBL 43. It's important to note that the conversion from the floating-point to integer format is a critical step for data input. You can refer to Section 12.3.2 for insights into the methods of converting FP numbers into integer numbers.

3) Execute synthesis and implementation for all designs, selecting the same FPGA part in Vivado. Configure DSP utilization to 0 and assess the resource utilization in terms of LUTs and FFs. You can find the resource utilization data in the generated Resource Utilization Report. Populate the hardware cost in the third and fourth columns in Table 12.10. Additionally, provide comments on the disparities for different designs in resource utilization.

4) Assuming the design specification requires a reference clock frequency of 100 MHz, approximate the achievable MOF for all designs. Populate the MOFs in the fifth column in Table 12.10. Provide comments on the differences in MOF.

5) Following the synthesis and implementation phases, evaluate the total power dissipation, which includes both static power and dynamic power. You can locate power consumption data in the generated Power Utilization Report. Fill in the power consumption values in the sixth column in Table 12.10. Provide comments on the differences in power estimation.

T&F – Not for Distribution

6) Conclude the performance evaluation, encompassing the hardware resource cost, power dissipation, and design speed in MOF.

PBL 46: Streaming Design on Sigmoid Neuron

1) Design a sigmoid neuron using the streaming design structure referred in Figure 12.19. Incorporate the single-clock-cycle FP operators provided in this textbook. Assume that the input matrix has a size of 4×4 FP data, and the streaming width is set to 16. The corresponding weights, $wh_1 - wh_{16}$, are FP 1.0, -1.0, 2.0, -2.0, until 8.0 and -8.0.
2) Create a testbench to perform simulations of the streaming design. The bus functional model should input 16 FP data every clock cycle, $x_1 - x_{16}$, referring the timing diagram illustrated in Figure 12.21.
3) Conclude the performance evaluation, which includes the computational latency measured in clock cycles (as observed in the simulation waveform) for each 4×4 FP matrix input, and the utilization of FP operators (as counted in your design). Populate the results in the second row of Table 12.11.

PBL 47: High-Speed Streaming Design on Sigmoid Neuron

1) Redesign the circuit in PBL 46 by leveraging the pipeline-designed FP operators provided in this book.
2) Create a testbench to facilitate the simulation of the sigmoid neuron design and validate its functionality using the same data inputs in PBL 46.
3) Comments on the difference between using single-clock-cycle IPs and the pipeline-designed IPs. Populate the results in the third row in Table 12.11.

T&F--Not for Distribution

TABLE 12.11
Performance evaluation of computational latency and FP operator utilization.

Designs		Latency (Clock Cycles)	Number of FP Operators
Streaming Design (Streaming Width: 16)	PBL 46: Single-Cycle FP Operators		
	PBL 47: Pipelined FP Operators		
Iterative Design (Streaming Width: 8)	PBL 48: Single-Cycle FP Operators		
	PBL 50: Pipelined FP Operators		
Iterative Design (Streaming Width: 4)	PBL 49: Single-Cycle FP Operators		
	PBL 50: Pipelined FP Operators		

T&F - Not for Distribution

PBL 48: Iterative Design on Sigmoid Neuron with Streaming Width Eight

1) Design a sigmoid neuron using the iterative design structure referred in Figure 12.22. Incorporate the single-clock-cycle FP operators provided in this textbook. Assume that the input matrix has a size of 4×4 FP data, and the streaming width is set to eight. Utilize the same weights in PBL 46.

2) Create a testbench to perform simulations of the iterative design with a streaming width of eight. The bus functional model should input eight FP data every clock cycle, $x_1 - x_8$, and it takes two clock cycles to feed in each data set containing 16 FP data. Refer to the timing diagram illustrated in Figure 12.23 for guidance.

3) Conclude the performance evaluation, which includes the computational latency measured in clock cycles (as observed in the simulation waveform) for each 4×4 FP matrix input, and the utilization

of FP operators (as counted in your design). Populate the results in the fourth row in Table 12.11.

PBL 49: Iterative Design on Sigmoid Neuron with Streaming Width Four

1) Design a sigmoid neuron using the iterative design structure referred in Figure 12.22. Incorporate the single-clock-cycle FP operators provided in this textbook. Assume that the input matrix has a size of 4×4 FP data, and the streaming width is set to four. Utilize the same weights in PBL 46.
2) Create a testbench to perform simulations of the iterative design with a streaming width of four. The bus functional model should input four FP data every clock cycle, $x_1 - x_4$, and it takes four clock cycles to feed in each data set containing 16 FP data. Refer to the timing diagram illustrated in Figure 12.23 for guidance.
3) Conclude the performance evaluation, which includes the computational latency measured in clock cycles (as observed in the simulation waveform) for each 4×4 FP matrix input, and the utilization of FP operators (as counted in your design). Populate the results in the sixth row in Table 12.11.

PBL 50: High-Speed Iterative Designs on Sigmoid Neuron with Streaming Width Eight and Four

1) Redesign the circuits in PBL 48 and PBL 49 by leveraging the pipeline-designed FP operators provided in this book.
2) Create a testbench to facilitate the simulation of the two design circuits and validate their functionality using the same FP data input.
3) Comments on the difference between using single-clock-cycle design IPs and the pipeline-designed IPs. Populate the results in the fifth and seventh rows in Table 12.11.

T&F – Not for Distribution