Crystal plasticity simulations

N. Vajragupta

Interdisciplinary Centre for Advanced Materials Simulation (ICAMS)
Ruhr-University Bochum, Germany
napat.vajragupta@rub.de

ICAMS
INTERDISCIPLINARY CENTRE FOR ADVANCED MATERIALS SIMULATION

RUHR UNIVERSITÄT BOCHUM

RUB

Nonlocal crystal plasticity model

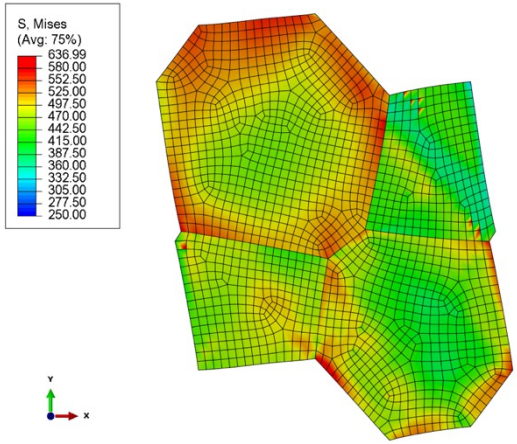

Local

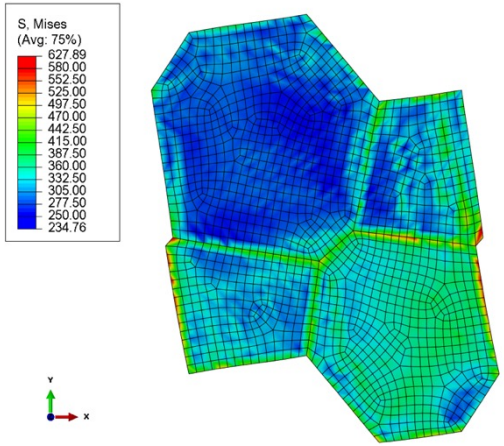

Nonlocal

$$F = F_e F_p$$

$$\dot{F}_p = L_p F_p$$

$$L_p = \sum_{\alpha=1}^{N_S} \dot{\gamma}_\alpha \tilde{M}_\alpha$$

$$\dot{\gamma}_\alpha = \dot{\gamma}_0 \left| \frac{\tau_\alpha + \tau_\alpha^{GNDk}}{\hat{\tau}_\alpha + \hat{\tau}_\alpha^{GNDi}} \right|^{p_1} sign\left(\tau_\alpha + \tau_\alpha^{GNDk}\right)$$

$$\dot{\hat{\tau}}_\alpha = \sum_{\beta=1}^{N_S} h_0 \chi_{\alpha\beta} \left(1 - \frac{\hat{\tau}_\alpha}{\hat{\tau}^f}\right)^{p_2} \left|\dot{\gamma}_\beta\right|$$

$$\tau_\alpha^{GNDk} = \tilde{S}^{GND} \cdot \tilde{M}_\alpha$$

$$\tilde{S}^{GND} = F_p S^{GND} F_p^T$$

$$S^{GND} \propto L^3 \frac{\partial^2 F_p}{\partial x^2}$$

$$\hat{\tau}_\alpha^{GNDi} \propto \left| \frac{\partial F_p}{\partial x} \right| \Rightarrow c_1 \chi_{\alpha\beta}$$

Source: Ma, Hartmaier, Philosophical Magazine 2013

Nanoindentation test

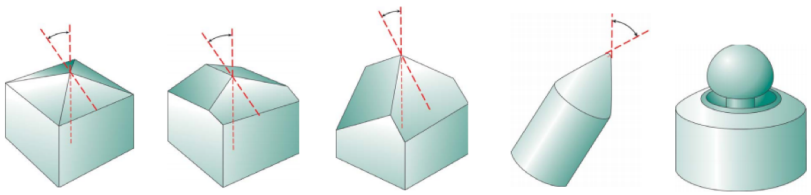

- One of the indentation testing methods to determine the important mechanical properties of materials such as elastic modulus and hardness.
- Penetration is in the nanometer scale.

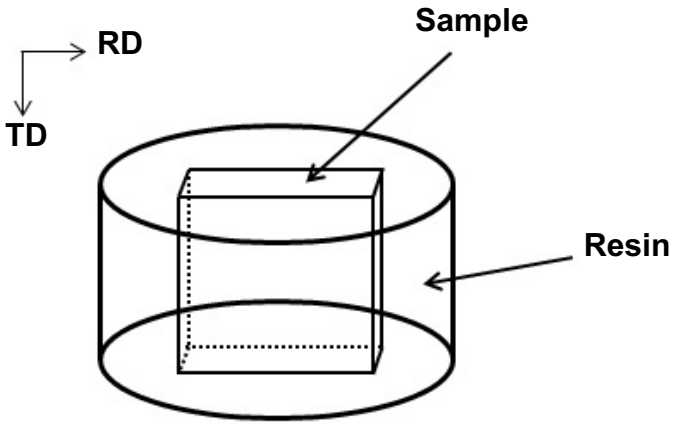

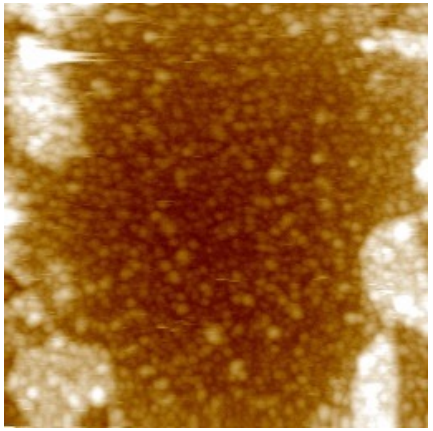

Nanoindentation test

Fitting the crystal plasticity parameters with nanoindentation simulation

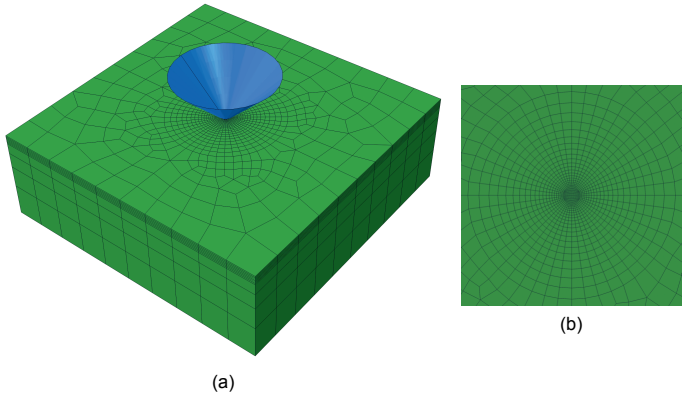

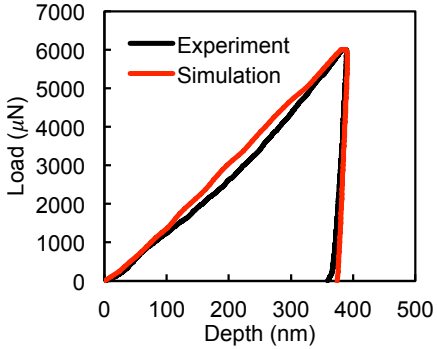

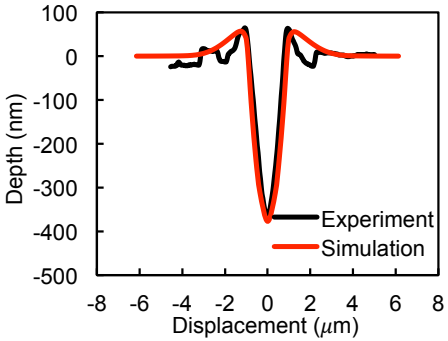

- Vary the crystal plasticity parameters to fit the load-depth response and pile-up profile

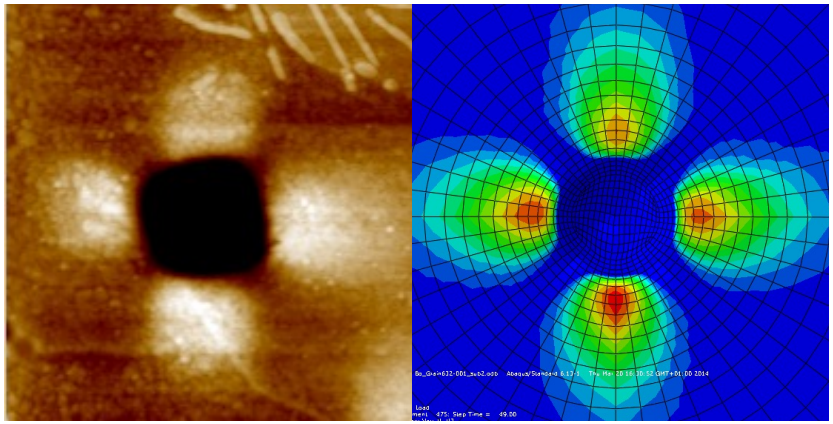

Tasks

Investigating the influence of crystal orientation on load-depth response and pile-up symmetry pattern

- Performing nanoindentation simulations on two different grain orientations
  - Euler angles (0°, 0°, 0°)
  - Euler angles (-45°, 0°, 0°)
- Figuring out that on which surface plane indentation are made.
- Comparing the load-depth response and pile-up symmetry pattern

Nanoindentation model

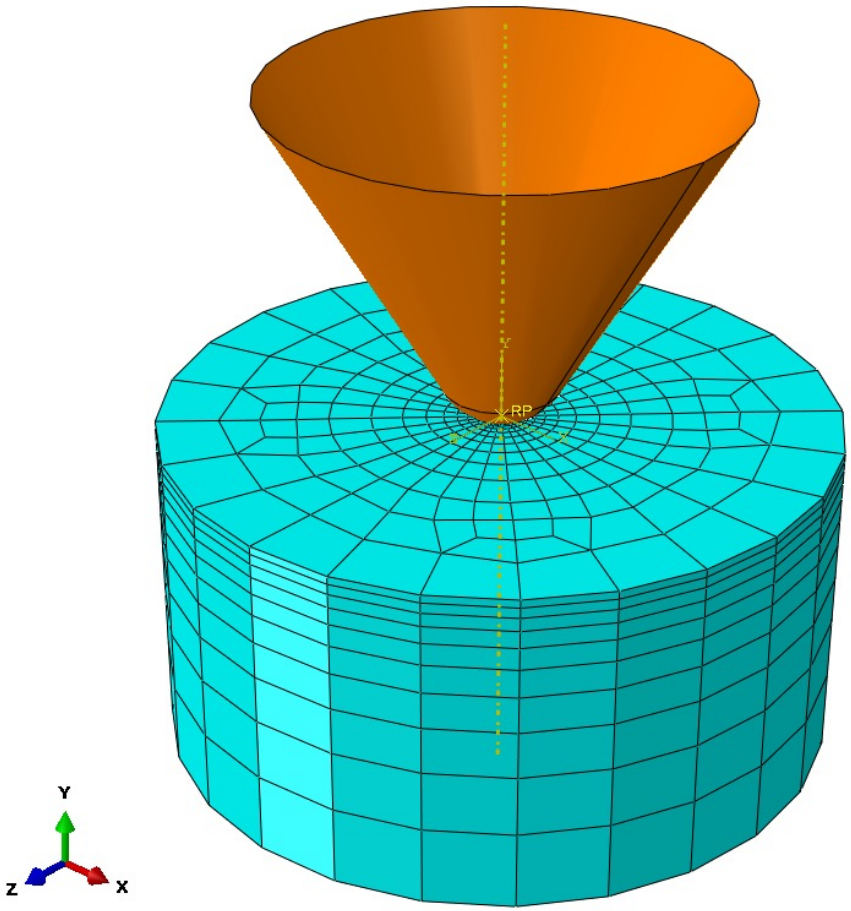

Nanoindentation model

Single grain model

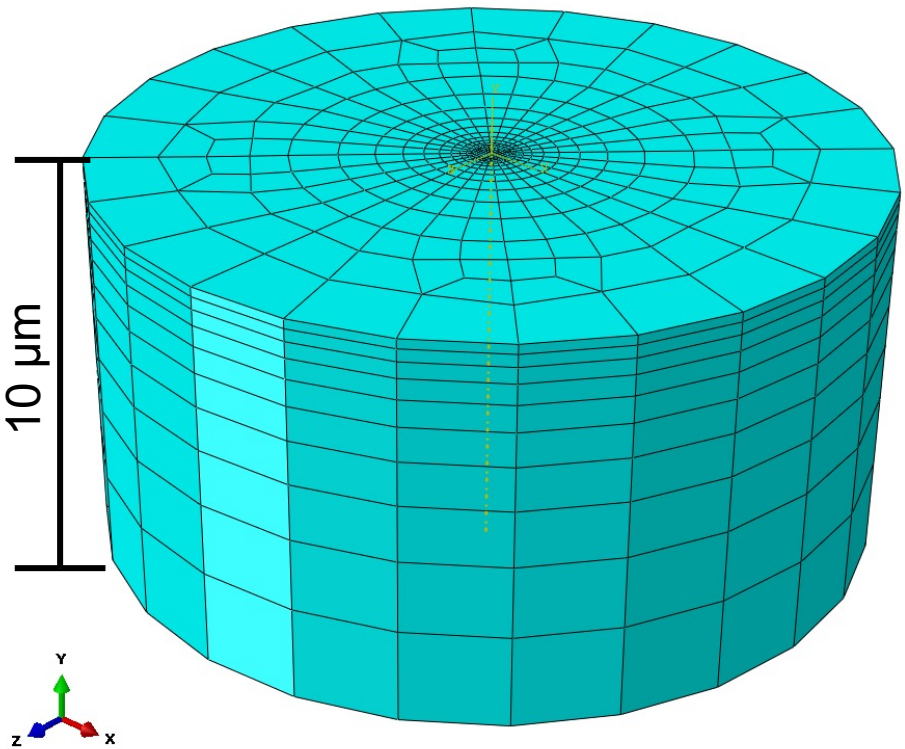

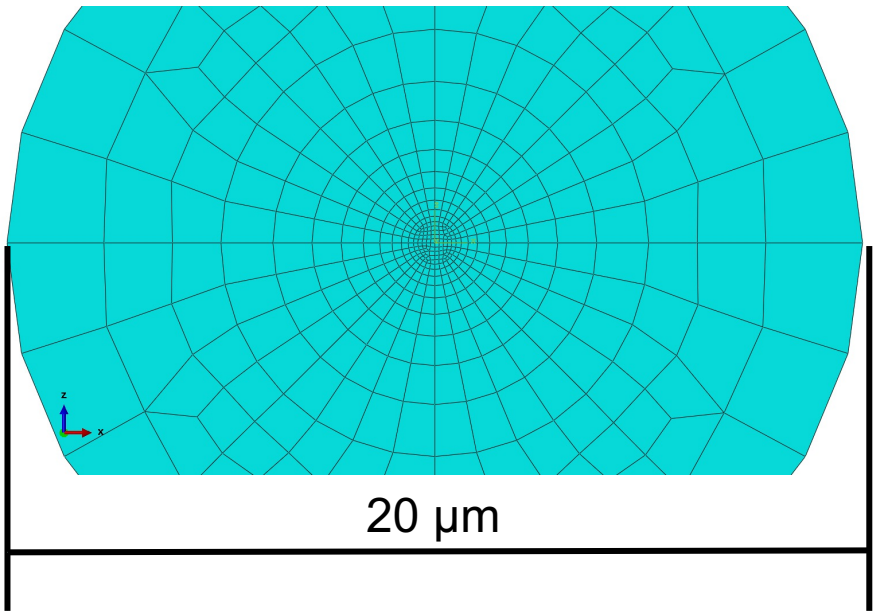

Nanoindentation model
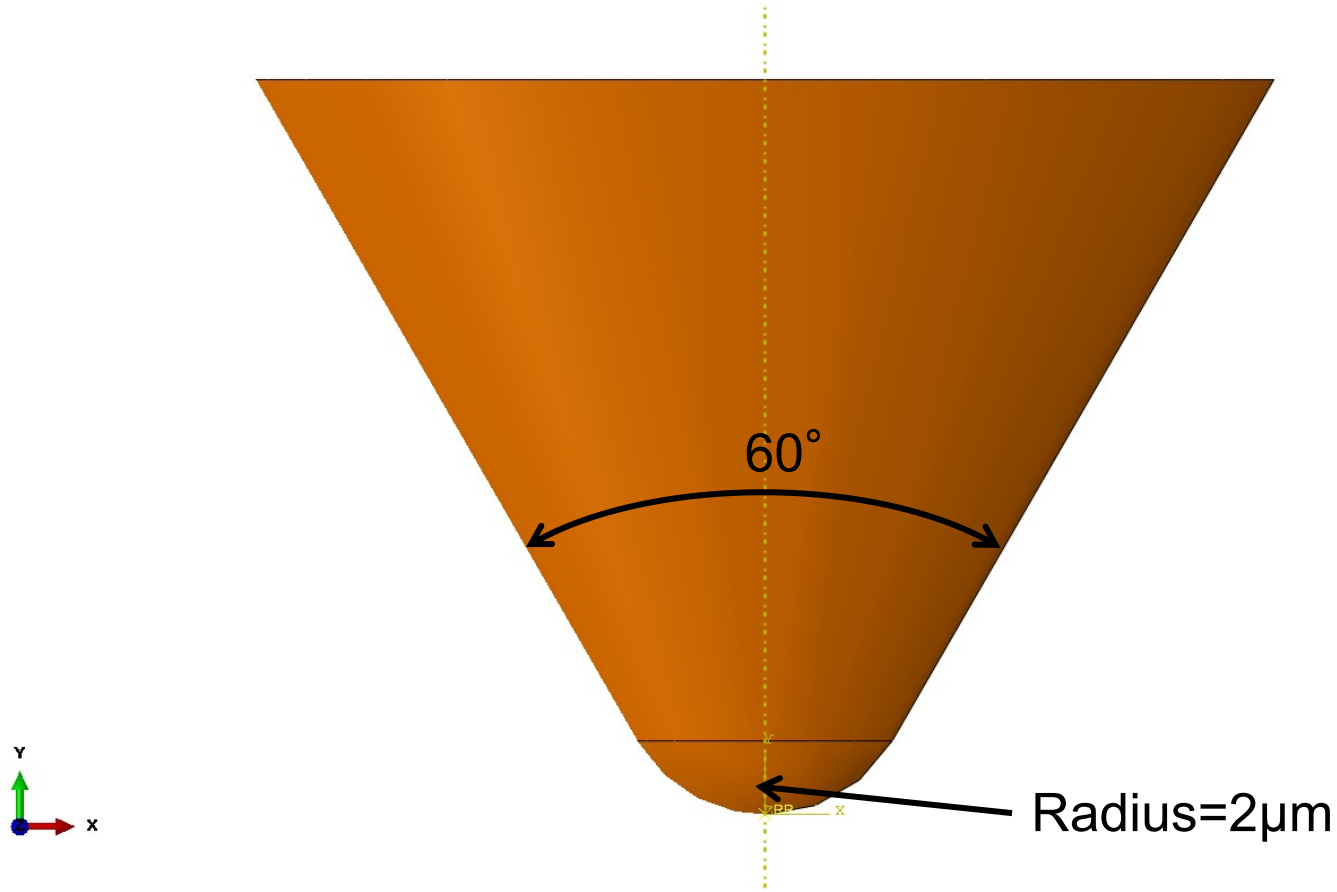
Indenter model