BayesINE8. Análisis de Decisiones

Intro a Estadística Bayesiana

DataLab

Abril 2026

ICMAT-CSIC

Contents

- Chapter objectives
- Apporaches to decision making
- Problem structuring
- Modeling beliefs and preferences
- Decision Theoretic/Analytic Computations
- Game theoretic issues from a Bayesian perspective
- Final comments
- References

Chapter objectives

Objectives

- Methods and tools to support decision making under uncertainty
- Incorporate earlier contents to support decisions
- Cover problems with adversaries

Approaches to decision making

Approaches to decision making

- Descriptive
  - Understanding of how decisions are made
- Normative
  - Models of how decision should be made
- Prescriptive
  - Helping DM make smart decisions
  - Use of normative theory to support DM
  - Elicit inputs of normative models
    - DM preferences and beliefs
    - Use of experts
  - Role of descriptive theories of DM behavior

Normative models of decision making under uncertainty

- Models for a single DM
  - vN-M expected utility
    - Objective probability distributions
  - Subjective expected utility (SEU)
    - Subjective probability distributions

Subjective expected utility solution

- If DM's decision behavior consistent with some set of "rational" desiderata (axioms) DM decides as if he has
  - **probabilities** to represent his **beliefs** about the future states
  - "**utilities**" to represent his **preferences** and **risk attitude** towards consequences

  and choose the alternative of maximum expected utility

- The subjective expected utility model balance in a "rational" manner
  - the DM's beliefs and risk attitudes

- Application requires to
  - know the DM's beliefs and "utilities"
    - Different elicitation methods
  - compute of expected utilities of each decision strategy
    - It may require approximation in non-simple problems

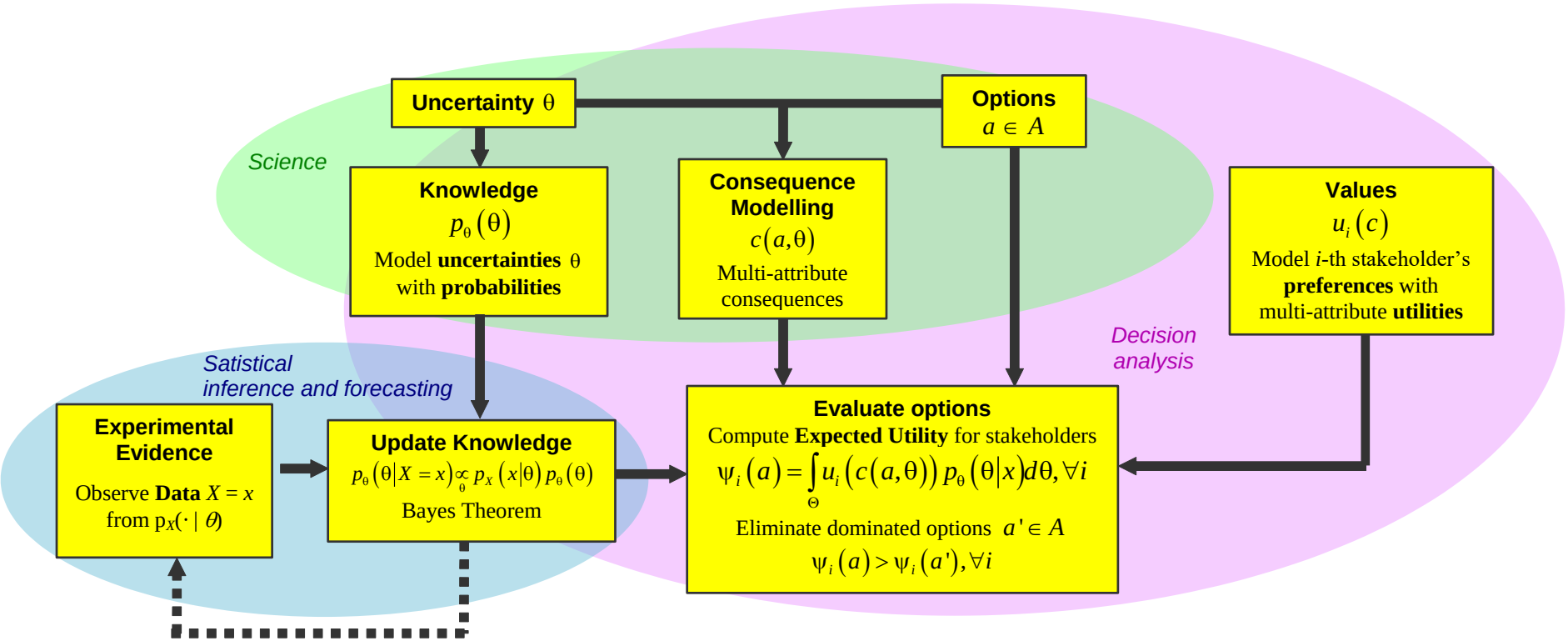
Uncertainty θ
Options
$a \in A$
Science
Knowledge
$p_\theta(\theta)$
Model **uncertainties** θ with **probabilities**
Consequence Modelling
$c(a,\theta)$
Multi-attribute consequences
Values
$u_i(c)$
Model i-th stakeholder's **preferences** with multi-attribute **utilities**
Decision analysis
Satistical inference and forecasting
Experimental Evidence
Observe **Data** $X = x$ from $p_X(\cdot \mid \theta)$
Update Knowledge
$p_\theta(\theta|X=x) \underset{\theta}{\propto} p_X(x|\theta)\, p_\theta(\theta)$
Bayes Theorem
Evaluate options
Compute **Expected Utility** for stakeholders
$\psi_i(a) = \int_\Theta u_i(c(a,\theta))\, p_\theta(\theta|x)\, d\theta, \forall i$
Eliminate dominated options $a' \in A$
$\psi_i(a) > \psi_i(a'), \forall i$

Problem structuring

Influence Diagrams

- Tool to structure (and solve) decision making problems
- Direct acyclic graph G=(N,A)
- Three main types of nodes.
  - Chance. Circle
  - Decision. Square
  - Value. Hexagon, Diamond
    - Fourth type of node. Deterministic. Double circle
- Two types of arcs
  - Arcs into decision nodes
  - Arcs into chance and value nodes

Influence Diagrams. Interpretation?

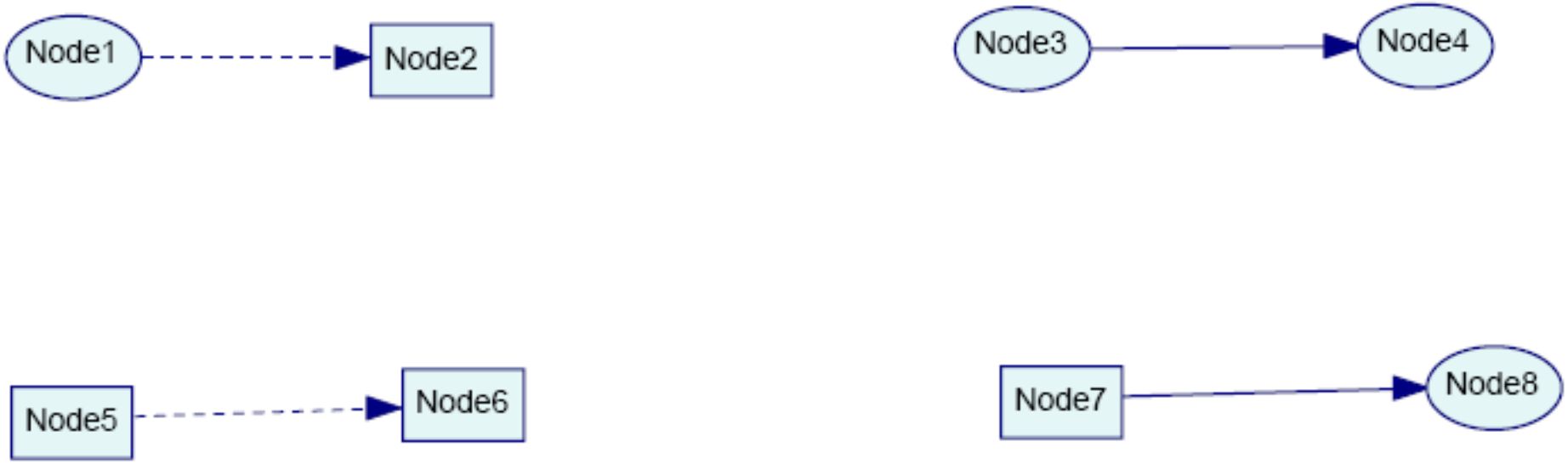

Suppose you're Miami's mayor. There is a hurricane threat. Would you issue an evacuation order?

You have as info a forecast from the NCH. But the forecast is not perfect…

Decision under risk with imperfect information

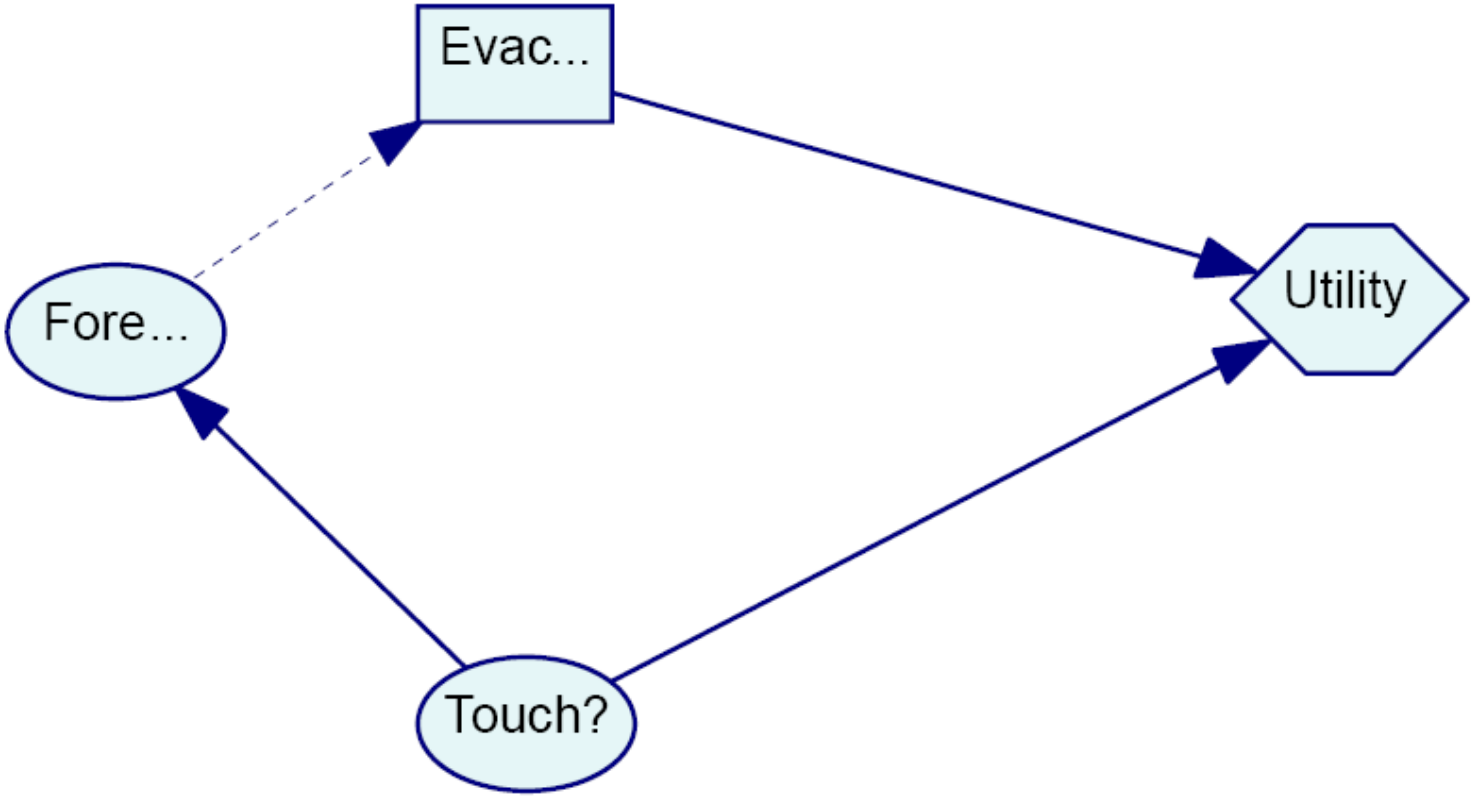

Multiple objectives

- Hierarchy
- From top level generic objective
- To more precise subobjectives
- Until low subobjectives determined.
  - Relevant
  - Non redundant
  - Measurable
- Natural, Constructed, Proxy

Multiple objectives in aviation safety. AESA

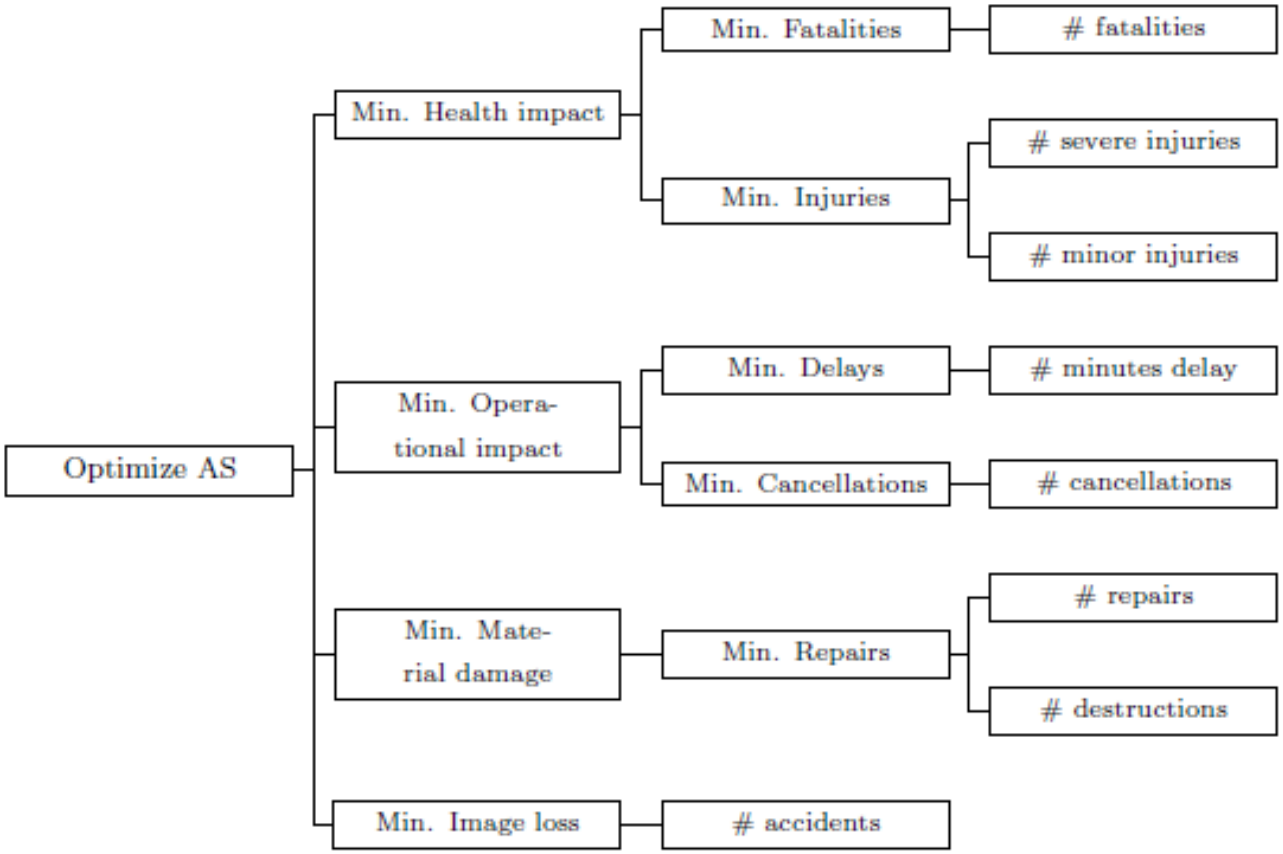

Probabilistic diagrams

- As basic tools for qualitative modelling of uncertainty use probabilistic influence diagrams a.k.a. causal networks, Bayesian networks, Belief networks,…. See the excellent

http://en.wikipedia.org/wiki/Bayesian_network

They are **influence diagrams** with chance nodes only. Qualitatively they describe a probabilistic model through

$$P(A1, A2,\ldots, An) = P(A1 \mid ant(A1))\ldots P(An \mid ant(An))$$

where ant (Ai) are the antecessors of node Ai.

In what follows we see several PIDs and we need to indicate the entailed probabilistic model

Probabilistic diagrams with three nodes

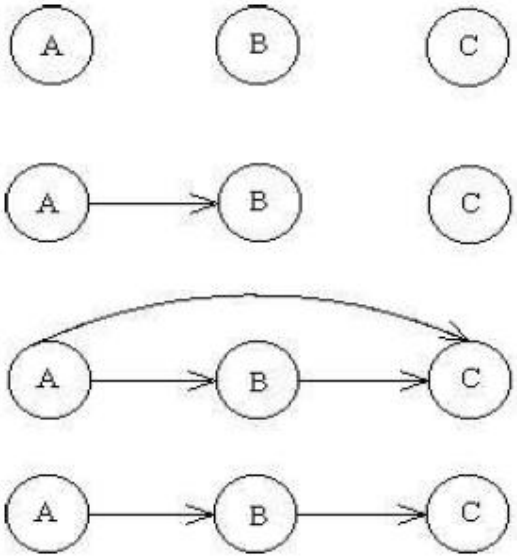

Before moving foreward, write the entailed probabilistic model

Probabilistic diagrams with three nodes

Model P(A ,B ,C)

P(A)P(B)P(C)

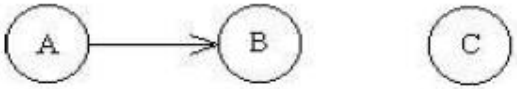

P(A) P(B|A) P(C)

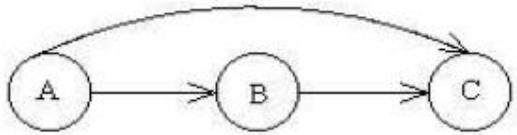

P(A)P(B|A)P(C|A,B)

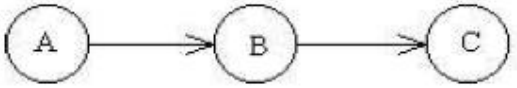

P(A)P(B|A)P(C|B)

First case, independence. Fourth case, A and C are conditionally independent given B.

Read http://en.wikipedia.org/wiki/Conditional_independence

Probabilistic diagrams. Asia

An example referring to lung diseases, from Lauritzen and Spiegelhalter (1988):

A breathing condition (dyspnea) may be due to tuberculosis, lung cancer or bronchitis, none of them or several of them. A recent visit to Asia, increase the chances of tuberculosis, whereas smoking is a risk factor for lung cancer and bronchitis. The results of an X-ray may not discriminate between cancer and tuberculosis, as neither the presence or absence of dyspnea does.

Probabilistic diagrams. Asia

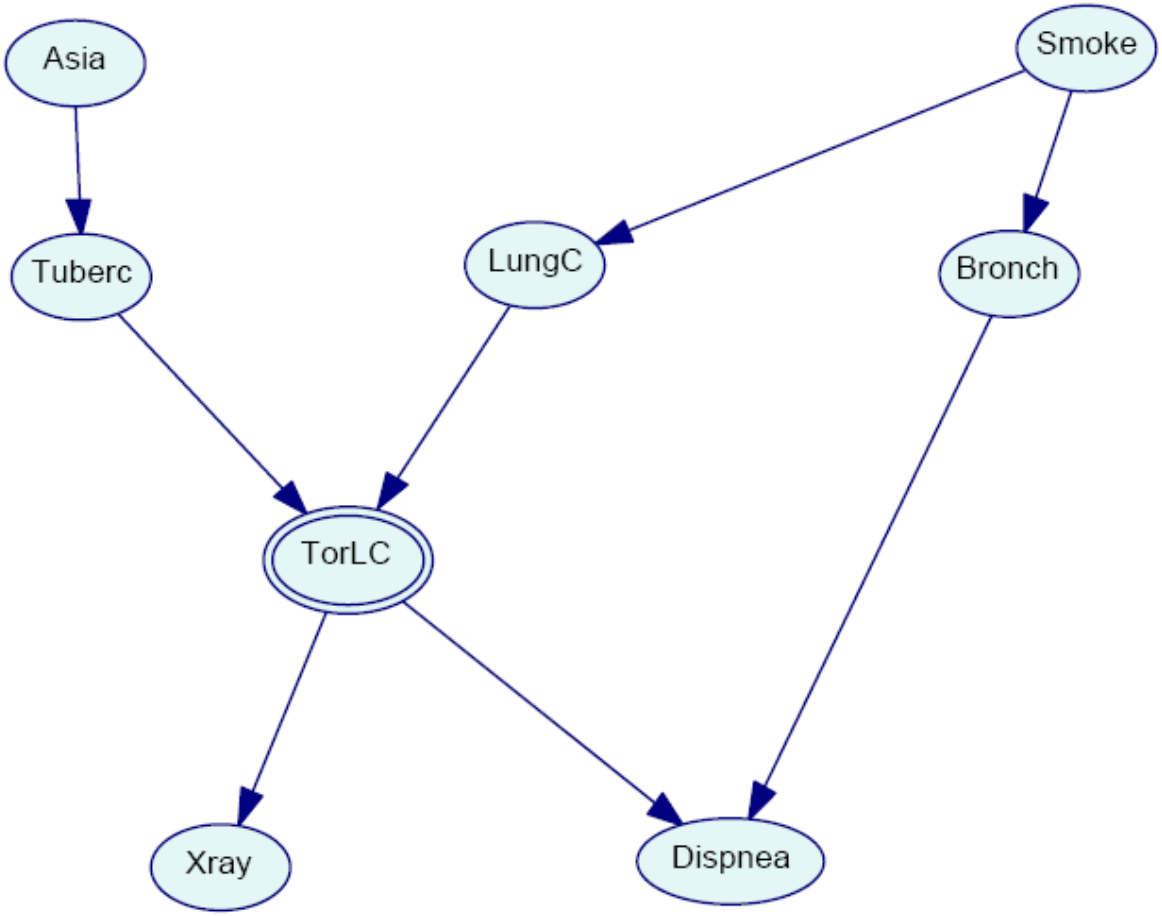

P(A,T,S,L,B,O,X,D) = P(A)P(T|A)P(S)P(L|S)P(B|S)P(0|T,L)P(X|O)P(D|O,B)

Forecasting aviation incidents

- **For type k incident**

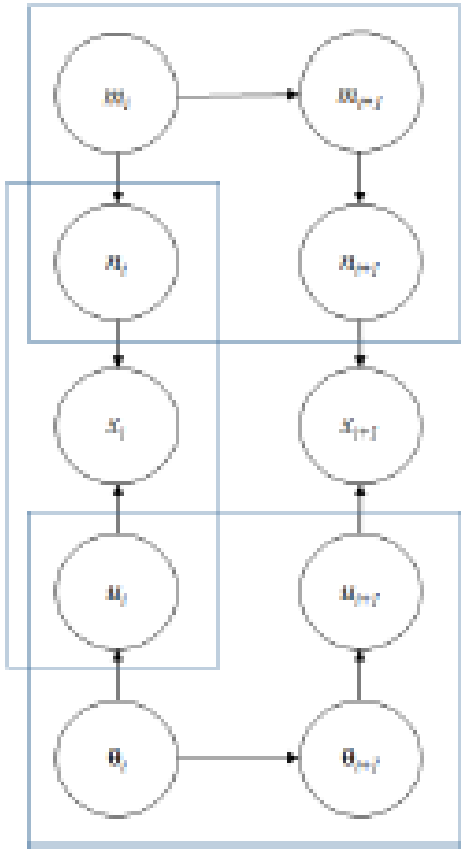

Figure 3.6: Tree de crecere

$$
\begin{cases}
x_i|\lambda_i, n_i \sim Po(\lambda_i n_i) \\
u_i = log\lambda_i \\
\begin{cases}
\begin{cases}
u_i = F_i\theta_i + v_i, v_i \sim N(0, V_i) \\
\theta_i = G_i\theta_{i-1} + w_i, w_i \sim N(0, W_i)
\end{cases} \\
\theta_0 \sim N(\mu_0, W_0)
\end{cases} \\
\begin{cases}
\begin{cases}
n_i = H_i m_i + z_i, z_i \sim N(0, \Sigma_i) \\
m_i = J_i m_{i-1} + \xi_i, \xi_i \sim N(0, S_i)
\end{cases} \\
m_0 \sim N(\eta_0, S_0)
\end{cases}
\end{cases}
$$

Standard parametric model for forecasting

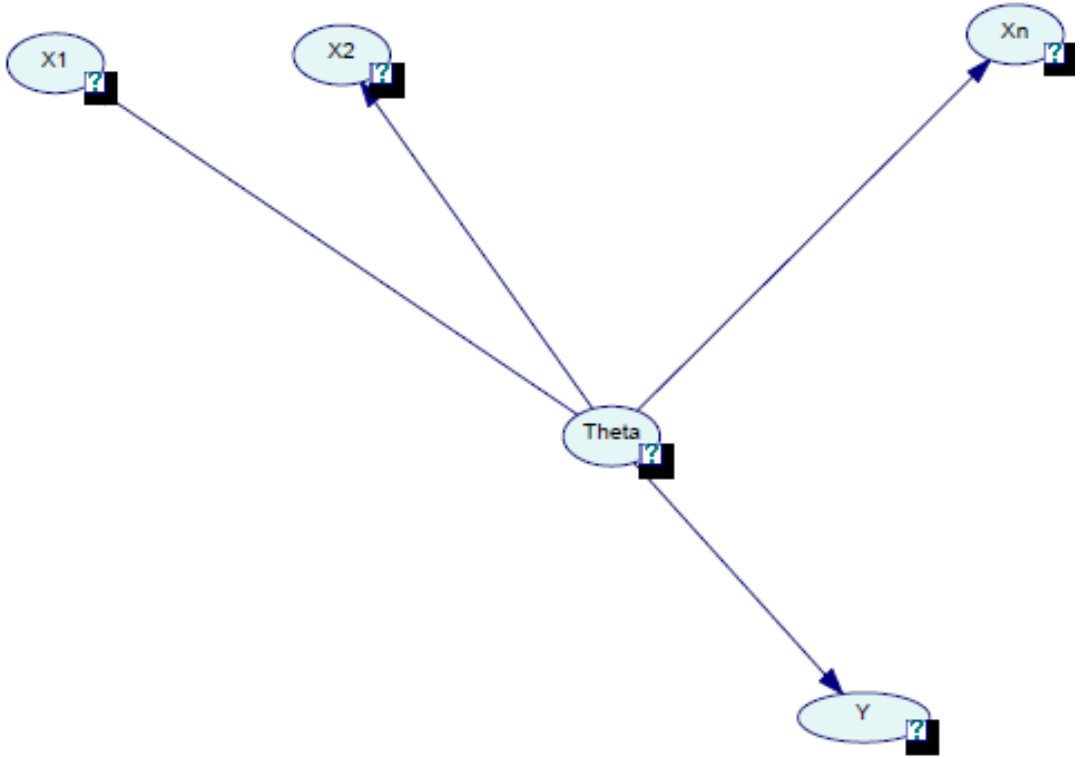

Provide the model

Modeling beliefs and preferences

Eliciting probabilities

Once the graphical model is built, we must elicit the probabilities. Sometimes we have access to good databases and may approximate probabilities based on relative frequencies. If not, we may use expert judgements…

https://www.expertsinuncertainty.net/

Eliciting probabilities. The reference experiment

- A ‘ruler’ to measure beliefs called reference experiment
- An experiment is a reference experiment for somebody if this person finds all the experiment results equally likely.

For me, some reference experiments are:

- A bag with six identical balls numbered 1,2,…,6. This allows me to measure probabilities with values in between 0, 1/6, 2/6, 3/6,4/6,5/6,6/6=1
- Throw four balanced coins. This allows me to measure probabilities in between 0, 1/16, 2/16,…., 15/16, 16/16=1
- A fortune wheel with 14 equal sectors, to measure probabilities in between 0, 1/14, 2/14,…., 14/14=1.

Eliciting probabilities. Protocol

- Once identified the calibration experiment, we use it to calibrate the probability of the event of interest. The idea is to gradually compare the event of interest with the reference event until we find one which is as likely. This is not easy to do for a beginner, but we may appeal to several protocols.

Eliciting probabilities. Biases

- Multitude of experiments have identified biases in our minds when processing info and making decisions. Pioneered by Kahneman and Tversky
- Bias identified -> Remedy (for practical purposes)
- System 1, System 2. Thinking fast and slow (Kahneman)

Modeling preferences under uncertainty

Build a function associating a number (utility) to each consequence, so that we compute the expected utility of each action

$$u(a) = \sum_{\theta} u(a,\theta)\, P(\theta)$$

Optimal alternative: **maximum expected alternative**

Modeling preferences under uncertainty

Which of these lotteries do you prefer?

$$\mathbf{A} = \begin{pmatrix} 1/2 & 1/2 \\ 1000 & -600 \end{pmatrix} \; y \; la \; \mathbf{B} = \begin{pmatrix} 1/2 & 1/2 \\ 100000 & -50000 \end{pmatrix}$$

Modeling preferences under uncertainty

Expected monetary value is not always an appropriate criteria for decision making under uncertainty

Expected utility provides an appropriate solution (at least normatively)

Modeling preferences under uncertainty

A sketch of formalisation

http://www.econ2.jhu.edu/people/karni/chapter.pdf

Provides a rigorous description

Modeling preferences under uncertainty

DM expresses preferences over lotteries

- Preferences rational: transitive and complete
- Independence property
- Continuity property (no heaven, no hell)

Preferences modeled through expected utility

$$\max_a \int u(c(a,\theta))p(\theta|x)d\theta$$

Utility is affine unique

Modeling preference. Single criteria

- Determine range of interest
- Assign utility 0 to worst value and utility 1 to best value
- Assign utilities to a few intermediate values (eg EP)
- Fit a utility function (e.g. through nonlinear least squares)
- Check for consistency
- Perform sensitivity analysis

- Take into account biases
- It. Imprecision

Details
http://www.jstor.org/pss/2631564

Modelling preferences. Risk attitudes

- Three basic risk attitudes
  - Risk aversion. Concave utility
  - Risk proneness. Convex utility
  - Risk neutrality. Linear utility

Consequence varying risk attitudes

Risk attitudes

Compare lotteries A and B. Which one do you prefer?

$$\mathbf{A} = \begin{pmatrix} 1/2 & 1/2 \\ 0 & 100000 \end{pmatrix} \text{ y } \mathbf{B} = \begin{pmatrix} 1 \\ 50000 \end{pmatrix}.$$

Risk attitudes

Compare lotteries A and B. Which one do you prefer?

$$\mathbf{A} = \begin{pmatrix} 1/2 & 1/2 \\ 0 & 100000 \end{pmatrix} \text{ y } \mathbf{B} = \begin{pmatrix} 1 \\ 50000 \end{pmatrix}.$$

If you prefer B to A, you seem to prefer the sure prize to the lottery (risk aversion)

In such case, the expected utility of B should be bigger than that of A:

$\frac{1}{2} * u(0) + \frac{1}{2} * u(100000) = \frac{1}{2} < 1 * u(50000)$

Graphically…

Which risk attitude??

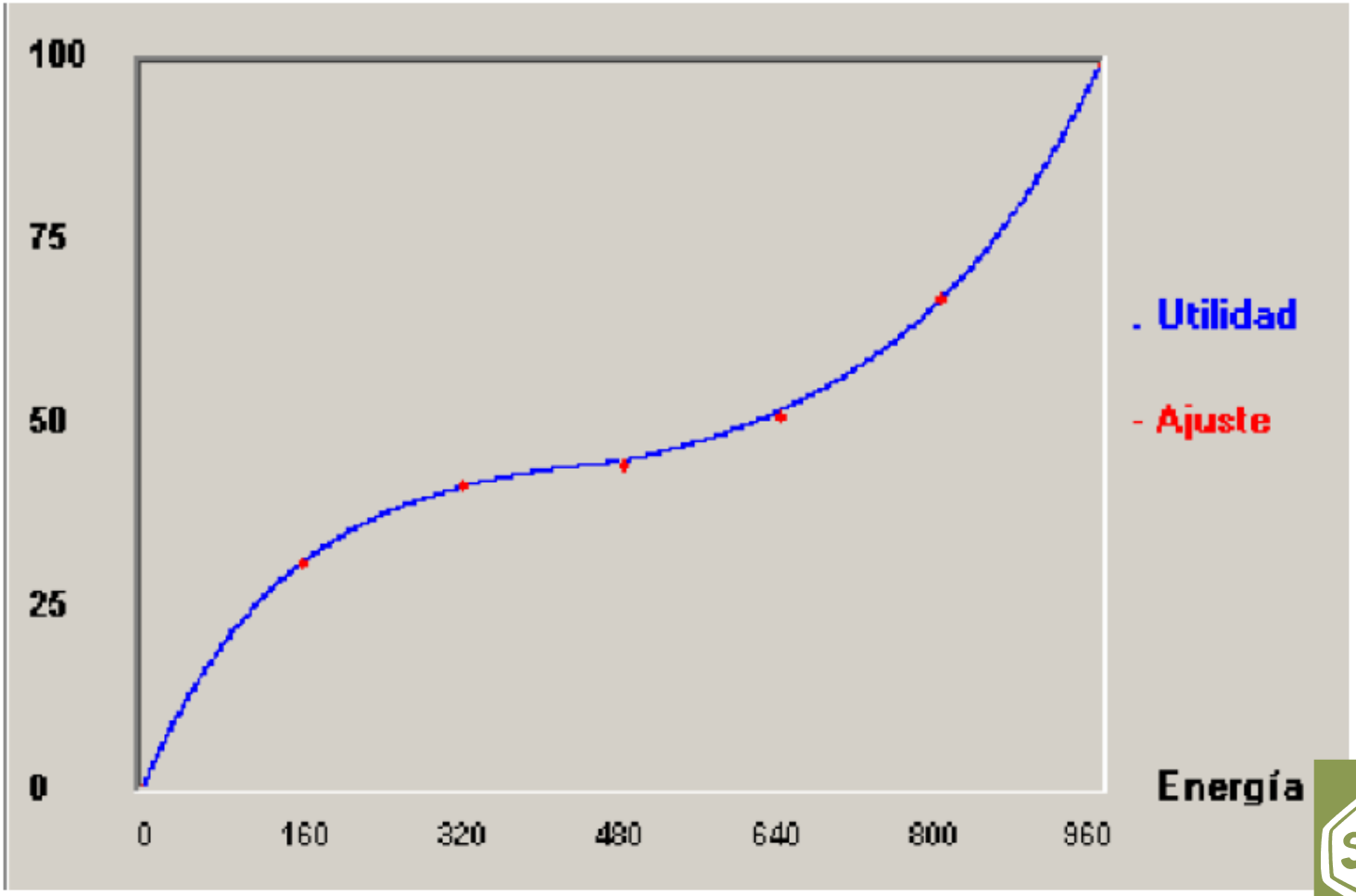

Multicriteria preferences under uncertainty

- Determine preference independence conditions
- Assess utility components
- Assess weights

As before

- Evaluate consistency of assignment
- Perform sensitivity analysis

Taking into account

- Biases
- Imprecision

Decision Theoretic/Analytic Computations

Statistical Decision Theory

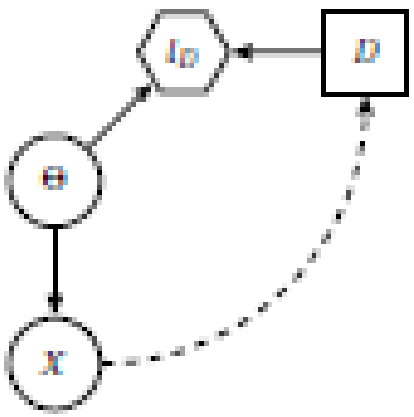

$$d^*(x) = \arg\min_d \int l_D(d,\theta)\, p_D(\theta \mid x)\, \mathrm{d}\theta.$$

$$d^*(x) = \arg\min_d \int l_D(d,\theta)\, p_D(x \mid \theta)\, p_D(\theta)\, \mathrm{d}\theta.$$

- Point estimation under quadratic loss

$$l_D(d,\theta) = (\theta - d)^2,$$

$$d^*(x) = \frac{1}{p_D(x)} \int \theta\, p_D(x \mid \theta)\, p_D(\theta)\, \mathrm{d}\theta = \int \theta\, p_D(\theta \mid x)\, \mathrm{d}\theta = E\left[\theta \mid x\right]$$

Bayesian computational methods

In general, we shall need to compute (posterior) maximum expected utility alternatives

$$\max_a \int u(c(a,\theta))p(\theta|x)d\theta$$

Sometimes, it may be convenient to solve

$$\max_a \int u(a,\theta)p(x|\theta)p(\theta)d\theta$$

One possibility, approximate expected utilities by Monte Carlo then optimise the MC sums… Sampling from the posterior??

1. Select a sample $\theta^1, ..., \theta^m \sim p(\theta|x)$.

2. Solve the optimisation problem

$$\max_{a \in \mathcal{A}} \frac{1}{m} \sum_{i=1}^{m} u(a, \theta^i)$$

yielding $a_m(\theta)$.

Computational methods: Augmented probability simulation

Frequently, the involved posterior depends on decision made. The following observation helps in this context. Define an artificial distribution such that (u, needs to be nonnegative)

$$h(a,\theta) \propto u(a,\theta) \times p_\theta(\theta \mid x, a).$$

Then, the marginal of the artificial is proportional to expected utility

$$h(a) = \int h(a,\theta)\, d\theta_{a,\theta} \propto \Psi(a).$$

This suggests the scheme

1. Generate a sample $((\theta^1, a^1), ..., (\theta^m, a^m))$ from density $h(a,\theta)$.
2. Convert it to a sample $(a^1, ..., a^m)$ from the marginal $h(a)$.
3. Find the sample mode.

ID evaluation

For a well defined ID

Eliminate barren nodes

While value node has antecessors

If dec. node reducible, reduce it, eliminate barren nodes

Else if chance node reducible, reduce it

Else, find an invertible arc and invert it

ID evaluation.

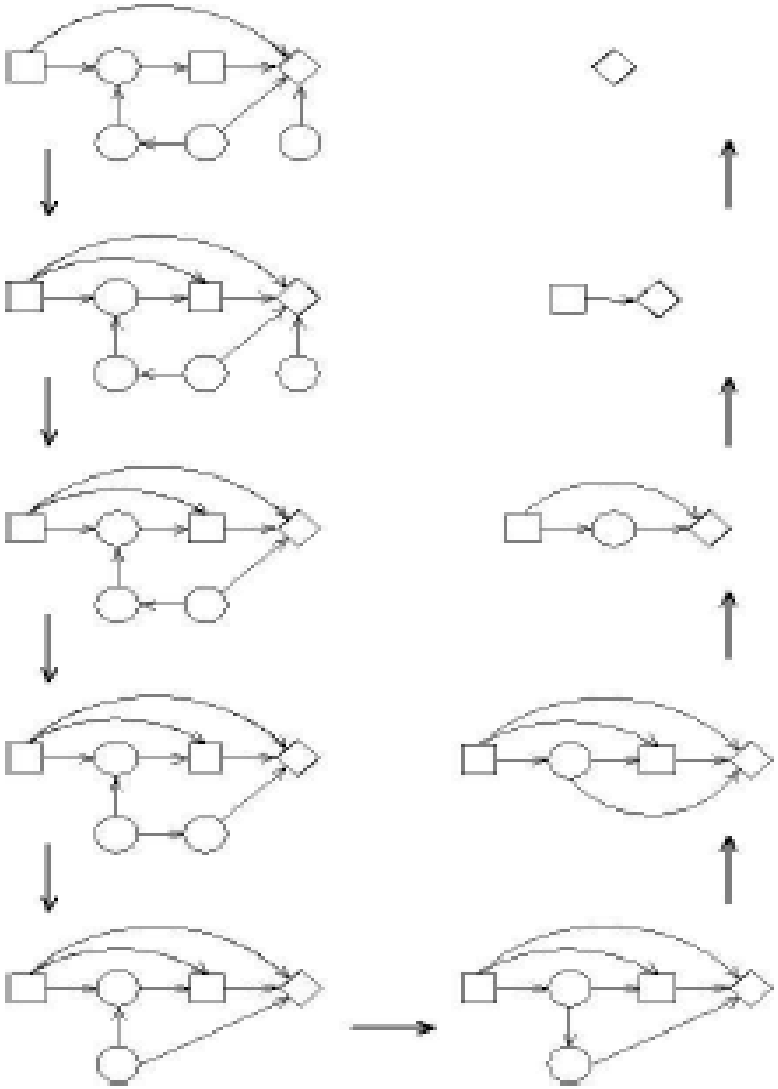

Game theoretic issues from a Bayesian perspective

Which is the best security resource allocation in a railway network?

Railway Network as stations, lines (&hotspots)

Threats: Pickpocketing, Fare evasion, Terrorism, …

Each element has a value

For each element, each threat, a predictive model of acts

Allocate security resources (constraints)

For each cell predict the impact of resource allocation

Optimal resource allocation

Which is the best security resource allocation in a railway network?

Railway Network as stations, lines (&hotspots)

Threats: Pickpocketing, Fare evasion, Terrorism, …

Each element has a value

For each element, each threat, a predictive model of acts

Allocate security resources (constraints)

For each cell predict the impact of resource allocation

Optimal resource allocation

NB1: Bad guys operate intelligent and organisedly!!!

Which is the best security resource allocation in a railway network?

Railway Network as stations, lines (&hotspots)

Threats: Pickpocketing, Fare evasion, Terrorism, …

Each element has a value

For each element, each threat, a predictive model of acts

Allocate security resources (constraints)

For each cell predict the impact of resource allocation

Optimal resource allocation

NB1: Bad guys operate intelligent and organisedly!!!

NB2: Different bad guys uncoordinated…

Adversarial risk analysis

- A framework to manage risks from actions of intelligent adversaries

- One-sided prescriptive support
  - Use a SEU model
  - Treat the adversary's decision as uncertainties

- Method to predict adversary's actions
  - We assume the adversary is a *expected utility maximizer*
    - Model his decision problem
    - Assess his probabilities and utilities
    - Find his action of maximum expected utility

  (But other *descriptive* models are possible)

- Uncertainty in the Attacker's decision stems from
  - *our* uncertainty about his probabilities and utilities
  - but this leads to a hierarchy of nested decision problems

  (random, noninformative, level-k, heuristic, mirroring argument,…) vs (common knowledge)

First Defender, afterwards Attacker

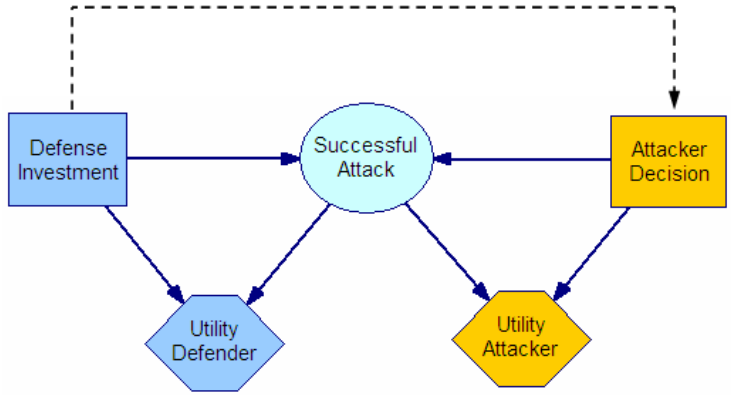

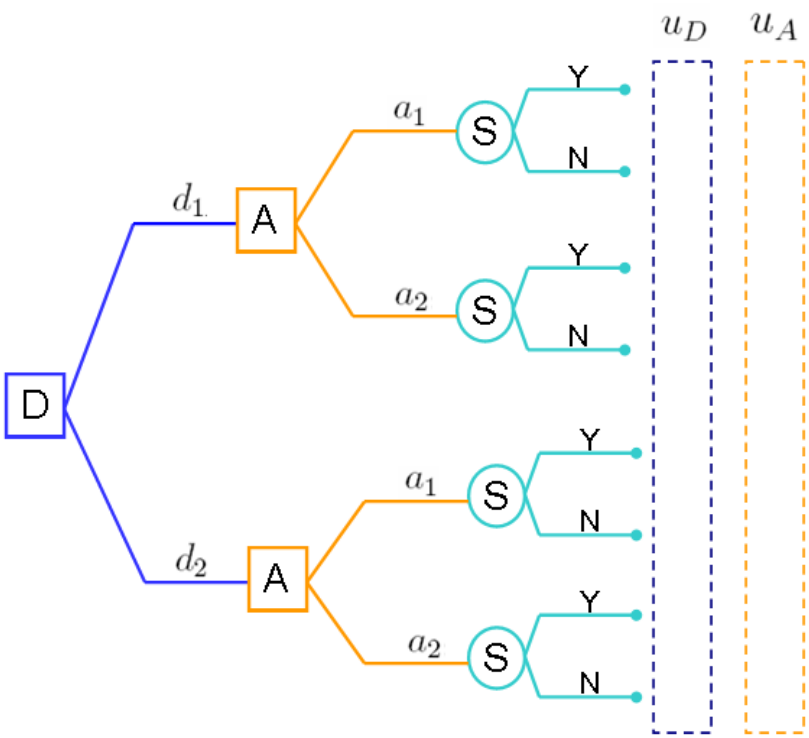

$$a^*(d) = \text{argmax}_{a \in \mathcal{A}} \psi_A(d, a), \forall d \in \mathcal{D}$$

$$d^* = \text{argmax}_{d \in \mathcal{D}} \psi_D(d, a^*(d))$$

Nash Solution, SPE: $(d^*, a^*(d^*))$

Standard
Game Theory Analysis

Supporting the Defender

Defender problem	Defender's solution
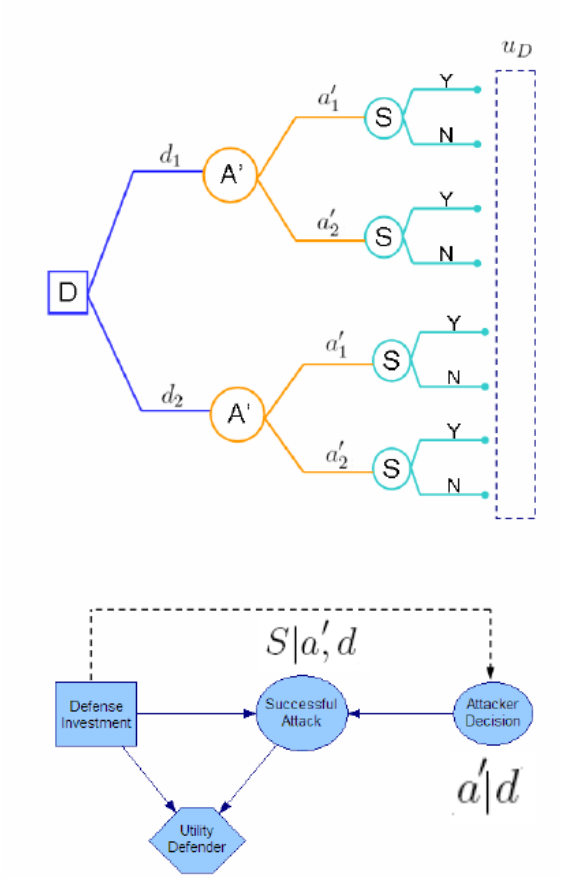	$\psi_D(d,a') = u_D(d,S=Y)\, p_D(S=Y \mid X_D=d, X'_A=a') + u_D(d,S=N)\, p_D(S=N \mid X_D=d, X'_A=a')$ $\psi_D(d) = \psi_D(d,a'_1)\, p_D(a'_1 \mid d) + \psi_D(d,a'_2)\, p_D(a'_2 \mid d)$ $d^* = \arg\max_{d \in X_D} \psi_D(d)$ Modeling input: $p_D(S \mid a', d)$ $p_D(a' \mid d)$??

Supporting the Defender: The assessment problem

Defender's view of Attacker problem	Elicitation of $p_D(a'\|d)$
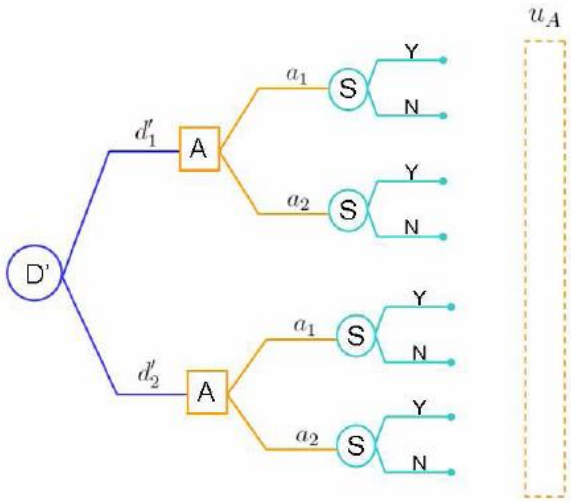 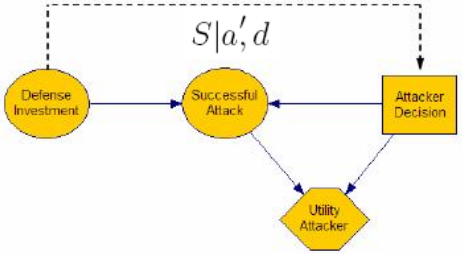	Assume A is a EU maximizer D's beliefs about $(\widehat{u}_A, \widehat{p}_A) \sim F$ $\hat{\psi}_A(d', a) = \hat{u}_A(a, S = Y)\, \hat{p}_A(S = Y \mid X'_D = d',\ X_A = a) + \hat{u}_A(a, S = N)\, \hat{p}_A(S = N \mid X'_D = d',\ X_A = a)$ $\hat{\psi}_A \sim \widehat{\Psi}_A$ $p_D(a'\|d) = Pr\Big[a' = \arg\max_{x \in X'_A} \widehat{\Psi}_A(d, x)\Big]$ <u>MC simulation</u> $\hat{p}_D(a\|d) \approx n^{-1} \sum_i \#\{a = \mathrm{argmax}_{x \in \mathcal{A}} \hat{\psi}_A^i(x, d)\}$ where $\hat{\psi}_A^i \sim \widehat{\Psi}_A,\ i = 1, \ldots, n$

Sequential D-A

1. Assess (p_D, u_D) from the Defender

2. Assess $F = (P_A, U_A)$, describing the Defender's uncertainty about (p_A, u_A)

3. For each d, simulate to assess $p_D(A|d)$ as follows:

   (a) Generate $(p_A^i, u_A^i) \sim F$, $i = 1, \ldots, n$

   Solve $a_i^*(d) = \text{argmax}_{a \in \mathcal{A}}\ \psi_A^i(d, a)$

   (b) Approximate $\hat{p}_D(A = a|d) = \#\{a = a_i^*(d)\}/n$

4. Solve the Defender's problem

$$d^* = \text{argmax}_{d \in \mathcal{D}}\ \psi_D(d, a_1)\ \hat{p}_D(A = a_1|d)\ +\ \psi_D(d, a_2)\ \hat{p}_D(A = a_2|d)$$

ARA templates

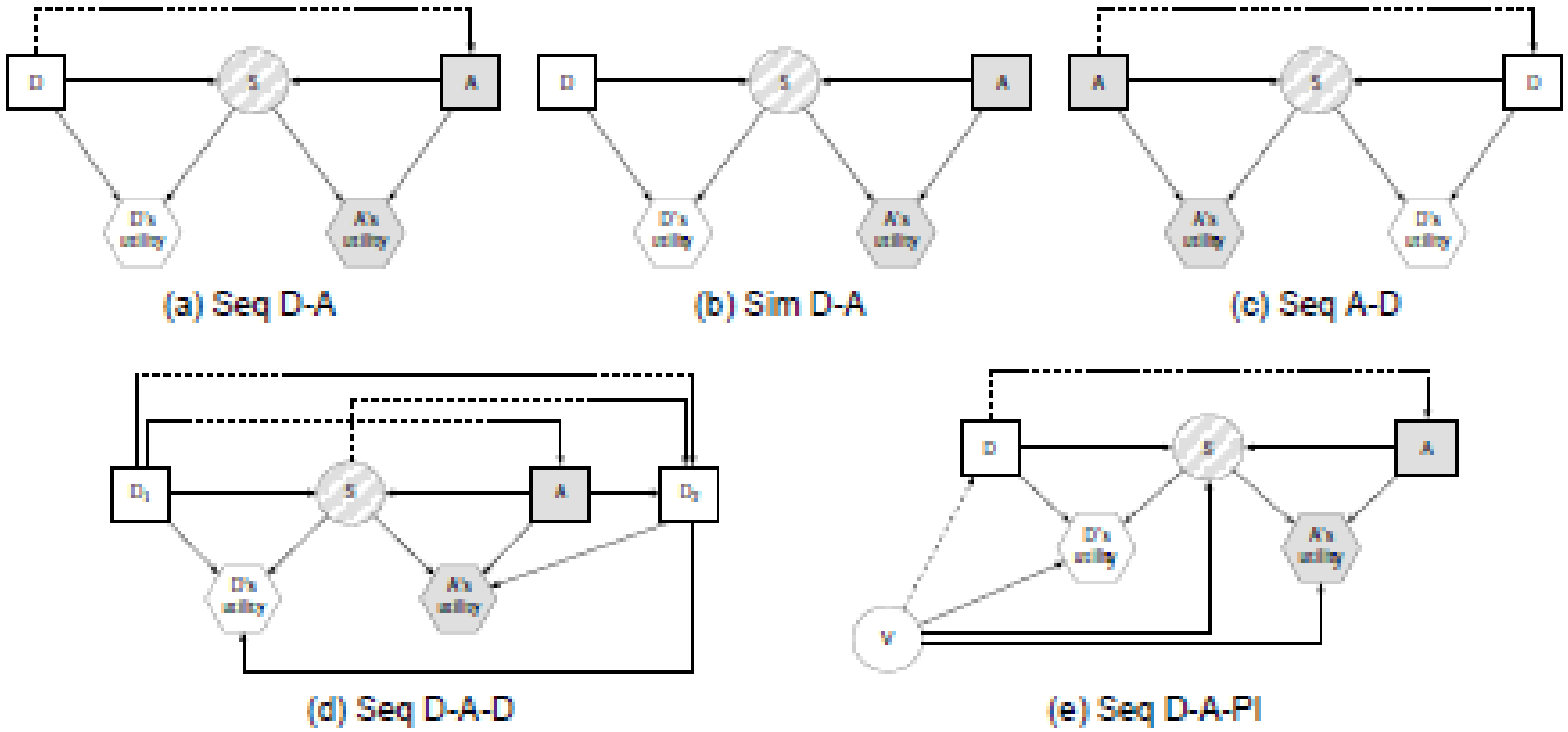

More general interactions

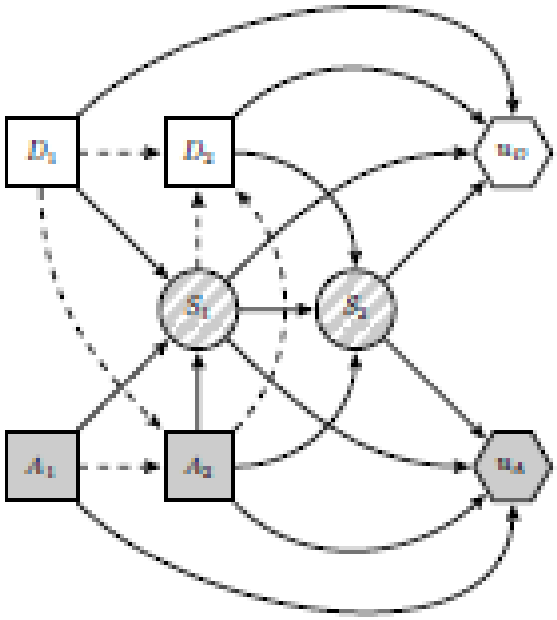

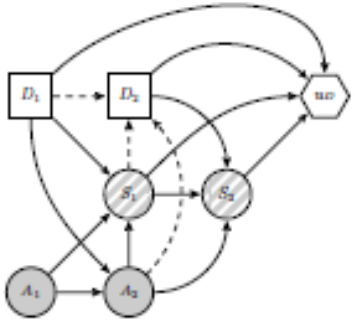

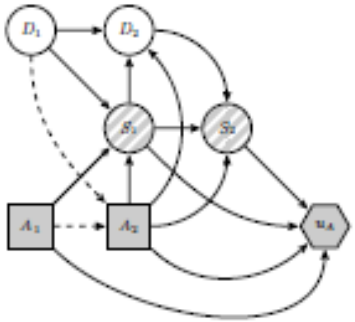

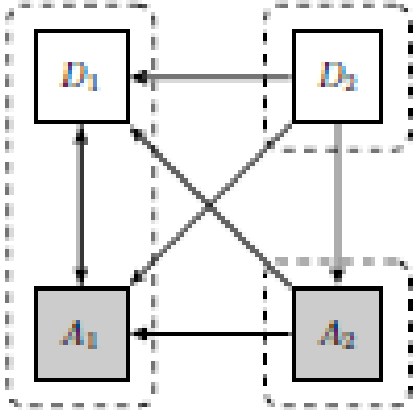

Final comments

- This has (almost) completed a (pretty fast) tour on key concepts in Bayesian Statistics
- The reasoning proposed is very robust and coherent, bringing many advantages to statistical and machine learning practice
- Fully and transparently integrable in policy decision making
- Computations are non-negligible but technology and science is progressing fast (too fast)
- In a world in which intelligent agents will be more and more present, these ideas will be increasingly relevant if we want to promote safe, secure and ethical AI systems

- The remaining lab contains a brief intro to Stan
- No adhoc lab for this chapter.
  - R contains no adhoc decision oriented packages (but you can manage with optimization routines linked with the type of tools we have seen in the labs)
  - We highly recommend GeNIe for decision analytic purposes (but it is not free for non-academic use)

References

Clemen, Reilly et al. Making Hard Decisions

French, DRI Statistical Decision Theory