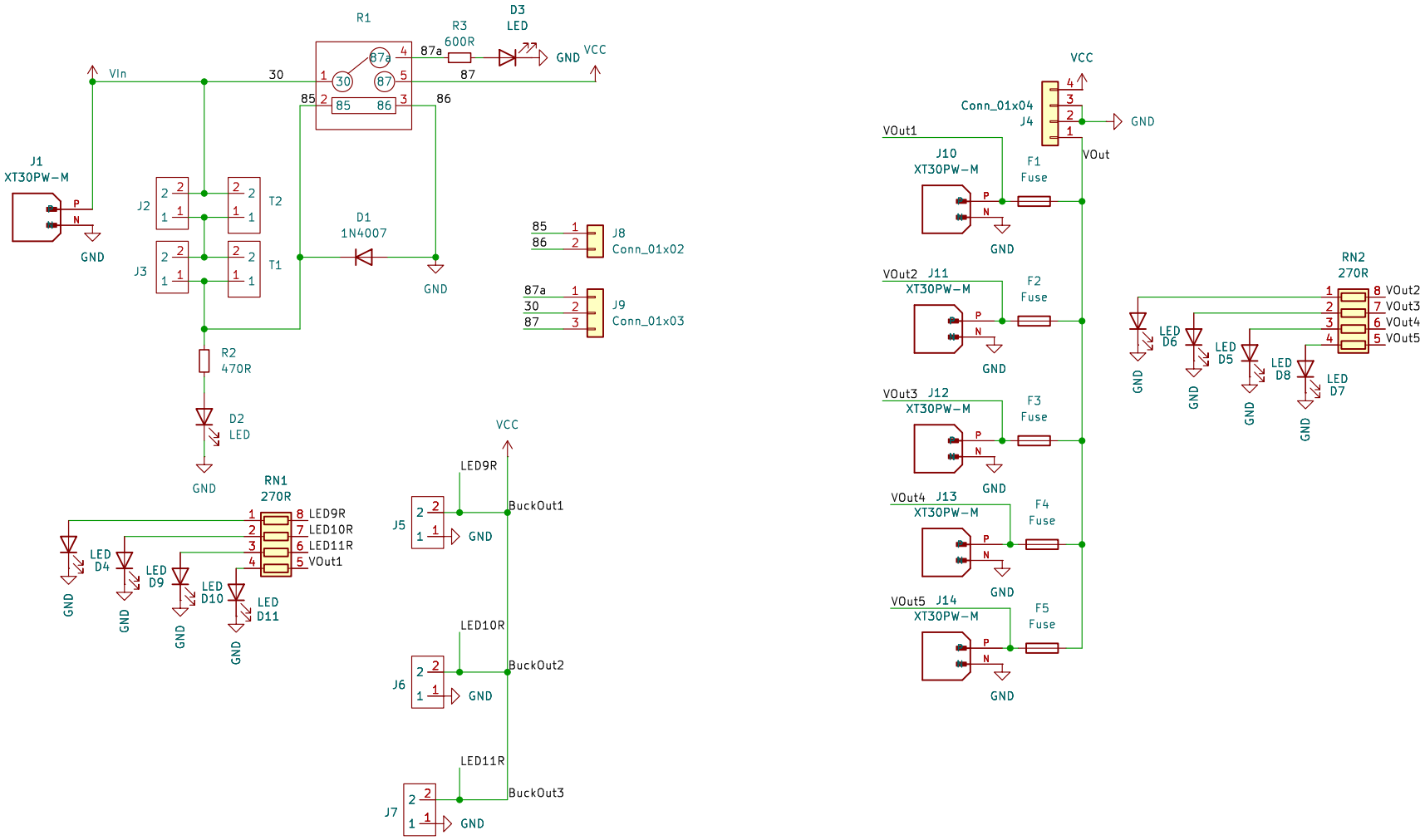

Imperial Planetary Robotics Lab

Sheet: /

File: CapyPower.kicad_sch

Title: Capybara Rover Power

Size: A4	Date: 2025-04-21	**Rev: 3.2**
KiCad E.D.A. 9.0.0		Id: 1/1