Grid-Connected Converters

Descripción

PONTIFICIA
UNIVERSIDAD
CATÓLICA
DE CHILE

POWER & ENERGY CONVERSION LABORATORY

Power and Energy Conversion Laboratory
Research in Power Electronics

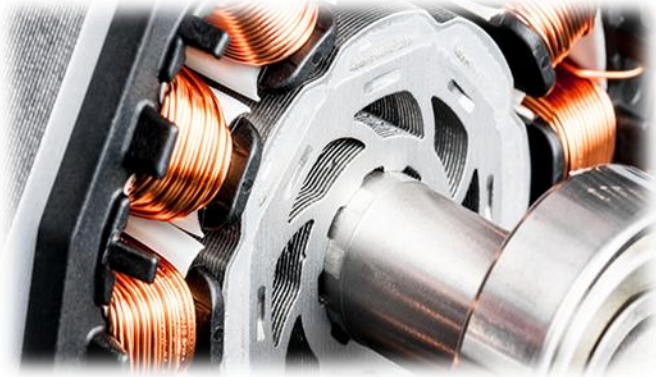

Lecture Sections Grid-Connected Converters

1. Grid Synchronization
2. Grid-Connected Converters
    1. Overview
    2. Grid Following
    3. Grid Forming
    4. Grid Supporting

PONTIFICIA UNIVERSIDAD CATÓLICA DE CHILE

Compilation of base papers

- Following a thorough search on the IEEE Xplore website, 8 prestigious papers studying Grid Synchronization and Grid Connected Converters in its various fields have been shortlisted.

- These papers are used both to present explicit information and to extract concepts and generate our own developments.

IEEE Xplore® Digital Library

1) 2006 Overview of Control and Grid Synchronization for Distributed Power Generation Systems
2) 2007 Decoupled Double Synchronous Reference Frame PLL for Power Converters Control
3) 2010 Power-Synchronization Control of Grid-Connected Voltage-Source Converters
4) 2011 Multiresonant Frequency-Locked Loop for Grid Synchronization of Power Converters Under Distorted Grid Conditions
5) 2011 A review on synchronization methods for grid-connected three-phase VSC under unbalanced and distorted conditions
6) 2012 Control of Power Converters in AC Microgrids
7) 2021 Grid-Forming Converters Control Approaches, Grid-Synchronization, and Future Trends—A Review
8) 2025 Grid-Supporting Renewable Energy Systems With Power Electronics Interfaces

Compilation of base papers

Key content covered in the selected papers:

[1] Overview of DPGS control and grid synchronization; review of PV/FC/WT converter topologies; comparison of dq, $\alpha\beta$, and abc control frames; importance of PLL robustness under unbalanced and distorted grids.

[2] Introduction of DDSRF-PLL for positive-sequence extraction; dual synchronous reference frames with decoupling to eliminate 2ω oscillations; fast and accurate synchronization in unbalanced/distorted grids.

[3] Power-synchronization control (PSC) for VSCs as an alternative to PLL; SM-like synchronization behavior; improved stability in weak grids; seamless switching with current-limiting control under faults.

[4] Introduction of MSOGI-FLL: multi-SOGI harmonic decoupling network enabling frequency-adaptive extraction of positive/negative sequences and multiple harmonics; robust synchronization under highly distorted/unbalanced grids with fast, accurate real-time implementation.

[5] Comprehensive review of VSC synchronization methods; classification of open-loop vs closed-loop and single- vs three-phase schemes; performance limits under harmonics, unbalance, and frequency variations.

[6] Unified framework for AC microgrid converter control: formal classification of grid-forming, grid-feeding, and grid-supporting converters; droop control with virtual impedance; hierarchical (primary–secondary–tertiary) control enabling islanded operation, power sharing, and ancillary services.

[7] Review of grid-forming converters (GFM); unified control architecture; comparison of droop, PSC, VSM, and VOC; synchronization without PLL; discussion of stability, current limitation, and future grid-code requirements.

[8] Review of RES grid-support functions; WT/PV/BSS ancillary services (voltage, frequency, LVRT); control strategies (droop, VSG, PR/MPC/SMC); coordination methods (decentralized, distributed, OPF-based).

Section 2: Grid-Connected Converters

Power Electronic Control Fundaments

PONTIFICIA
UNIVERSIDAD
CATÓLICA
DE CHILE

2.1: Grid-Connected Converters

Overview

Grid-Connected Converters: General connection and configurations

Concept

- A grid-connected power converter interfaces a DC or variable-frequency AC source with the electrical grid through a power electronic stage and an output filter.
- The connection point to the grid is defined as the Point of Common Coupling (PCC).

General configuration

- Power stage (VSC) connected to the grid through L / LC / LCL filter.
- Measurements of grid voltage and currents at PCC.
- Control system defines converter behavior (current-controlled or voltage-controlled).
- The diagram in the figure shows the possible configurations of converters connected to the grid, illustrating how different operating modes can be implemented based on the established synchronization method.

Key idea

- The physical hardware is similar, but the control strategy determines the converter role in the power system.

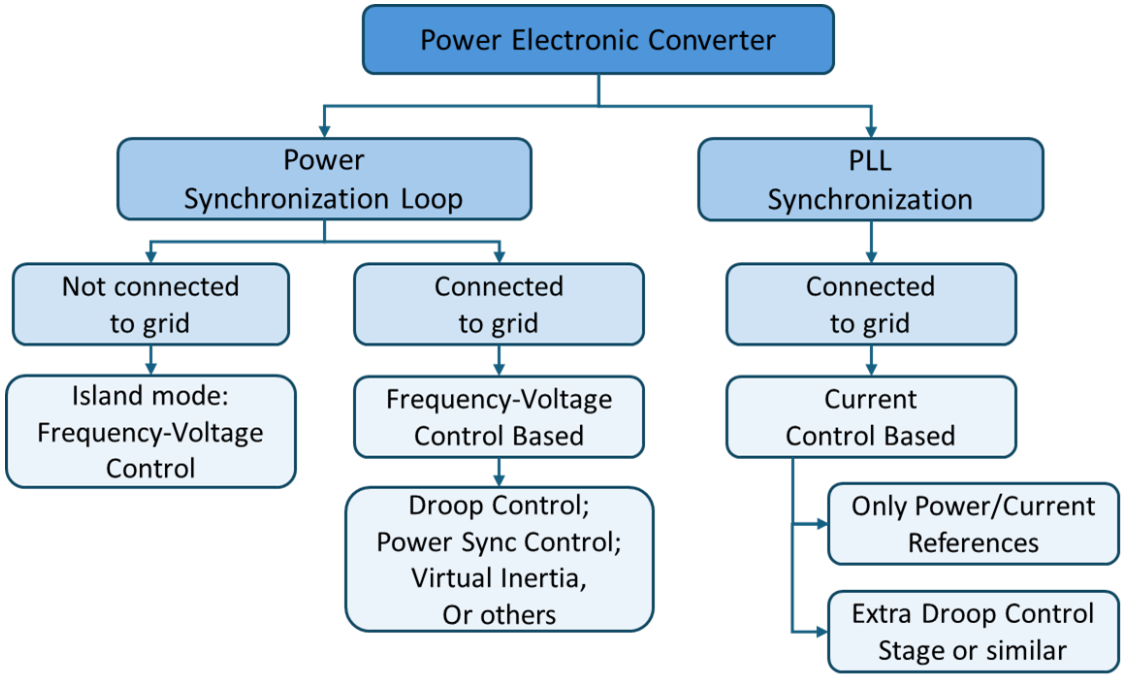

Figure 2.1. Converter connections and configurations posibilities

Grid-Connected Converter: Base Classifications on [6]

Based on [6], grid-connected converters are classified according to their control objective and interaction with the grid:

Grid-Forming (GFM)

- Controlled as an ideal voltage source with low output impedance.
- Sets voltage magnitude and frequency at the PCC.
- Enables islanded operation.

Grid-Feeding (Grid-Following, GFL)

- Controlled as an ideal current source with high output impedance.
- Injects prescribed active and reactive power into an energized grid.
- Requires external voltage and frequency reference.

Grid-Supporting (GSM)

- Hybrid behavior between GFM and GFL.
- Participates in voltage and frequency regulation via droop control.
- Can be implemented as current-source based or voltage-source based. This could be understood as Grid Forming + Support Function and Grid Following + Support Functions.

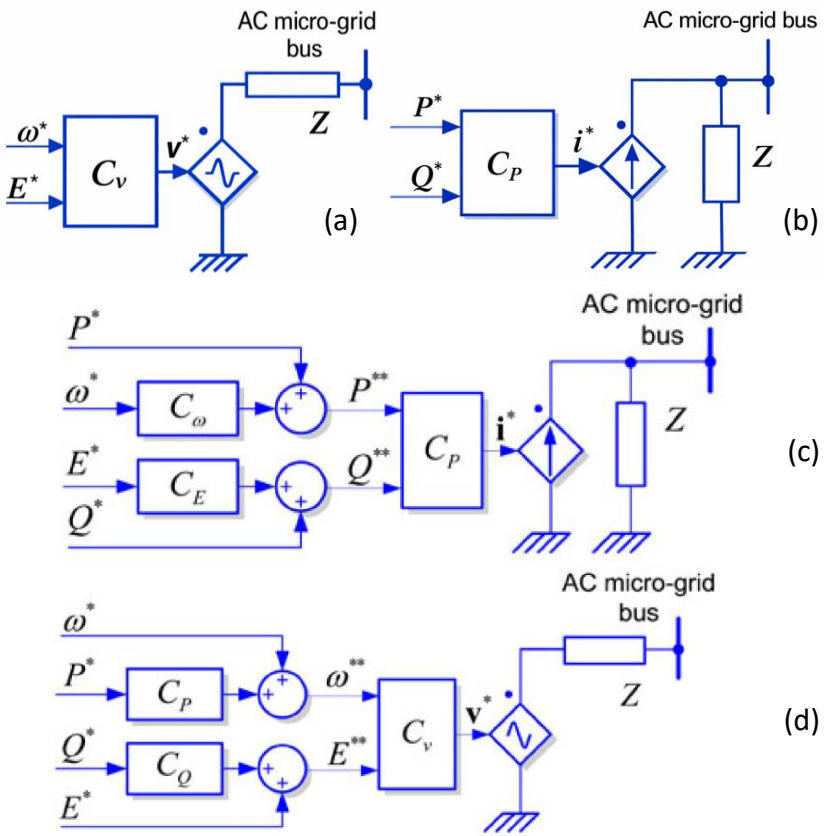

Figure 2.2. Simplified representation of grid-connected power converters. (a) grid-forming, (b) grid-feeding, (c) current-source-based grid-supporting, and (d) voltage-source-based grid-supporting. [6]

[6] J. Rocabert, A. Luna, F. Blaabjerg and P. Rodríguez, "Control of Power Converters in AC Microgrids," 2012

Classifications on [6] Identified in General Configurations

Identified configurations

- Grid-Forming → Voltage control based in island mode.
- Grid-Feeding → Current control based with only current/power reference.
- Grid-Supporting (current source) → Current control based + droop loops.
- Grid-Supporting (voltage source) → Voltage control based + droop loops.

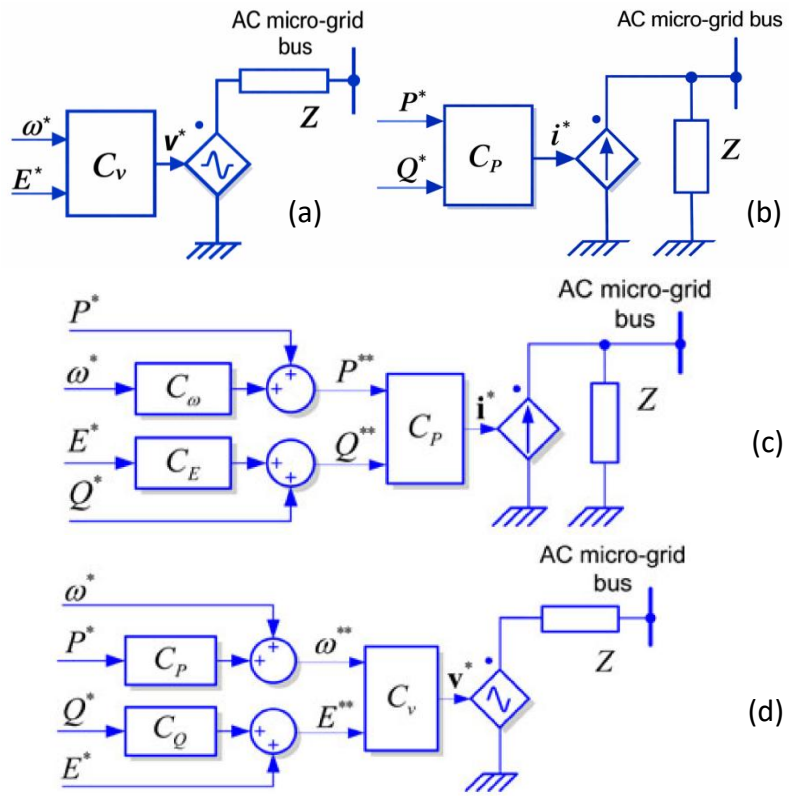

Figure 2.2. Simplified representation of grid-connected power converters. (a) grid-forming, (b) grid-feeding, (c) current-source-based grid-supporting, and (d) voltage-source-based grid-supporting. [6]

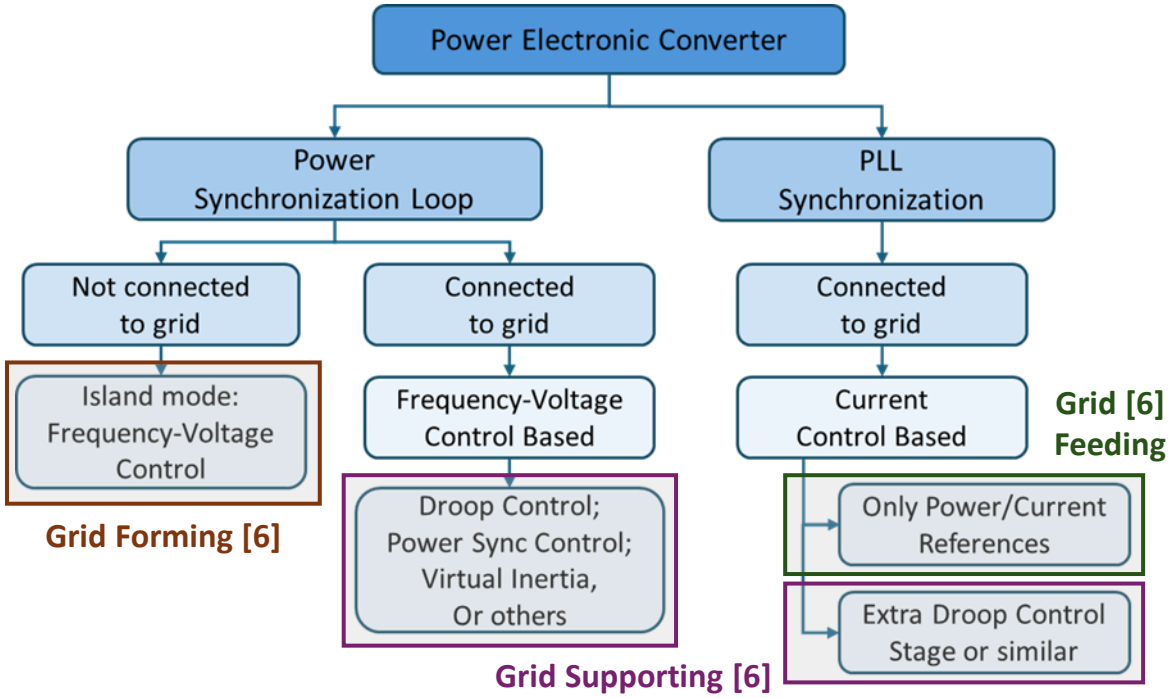

Figure 2.3. Converter connections and configurations mapping classification on [6]

Grid-Connected Converter: Classifications on [7]

Paper [7] reformulates the classification from a grid interaction perspective:

Grid-Following (GFL)

- Synchronizes to grid voltage using PLL.
- Tracks P/Q references via current control.
- Allow supporting capabilities (Power Control)
- Stability depends on grid strength (SCR).

Grid-Forming (GFM)

- Does not require PLL for steady-state operation.
- Directly controls voltage magnitude and frequency.
- Allow supporting capabilities (Power Control)
- Provides reference for other converters.

Key contribution

- Highlights limitations of GFL in weak grids.
- Motivates transition toward GFM operation in low-inertia systems.

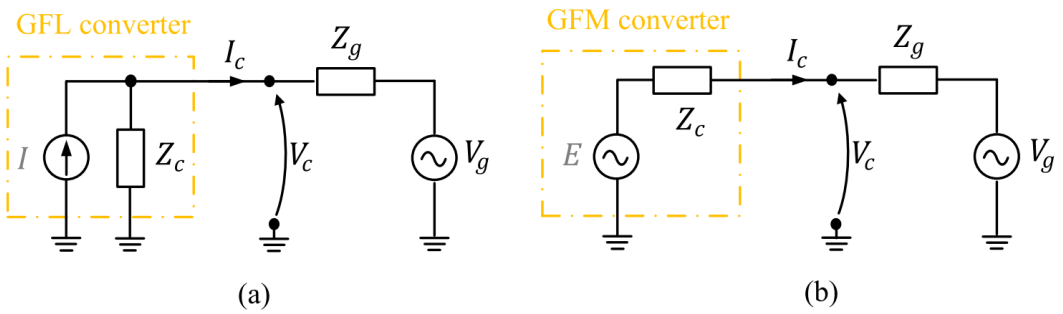

Figure 2.4. (a) Simplified representation of a GFL converter, (b) simplified representation of a GFM converter. [7]

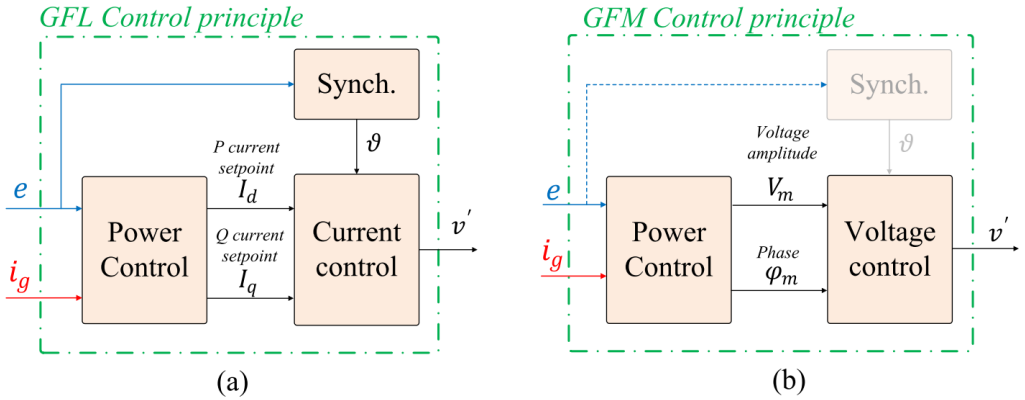

Figure 2.5. Simplified explanation of the control working principles: (a) GFL converter, (b) GFM converter. [7]

[7] R. Rosso, X. Wang, M. Liserre, X. Lu and S. Engelken, "Grid-Forming Converters: Control Approaches, Grid-Synchronization, and Future Trends—A Review," 2021

Grid-Connected Converter: Classifications on [8]

Paper [8] expands the classification toward grid-support and ancillary services:

Grid-Following (GFL)

- Power-controlled operation using inner current loop.
- Can be extended with droop or support functions.

Grid-Forming (GFM)

- Voltage-controlled operation.
- Includes multiple implementations:
  - Droop control,
  - Power-synchronization control,
  - Virtual synchronous generator (VSG),
  - Matching control.

Supporting Functions

Explicitly defined as Following or Forming converters providing:

- voltage support,
- frequency support,
- inertia-like response,
- LVRT/FRT services.

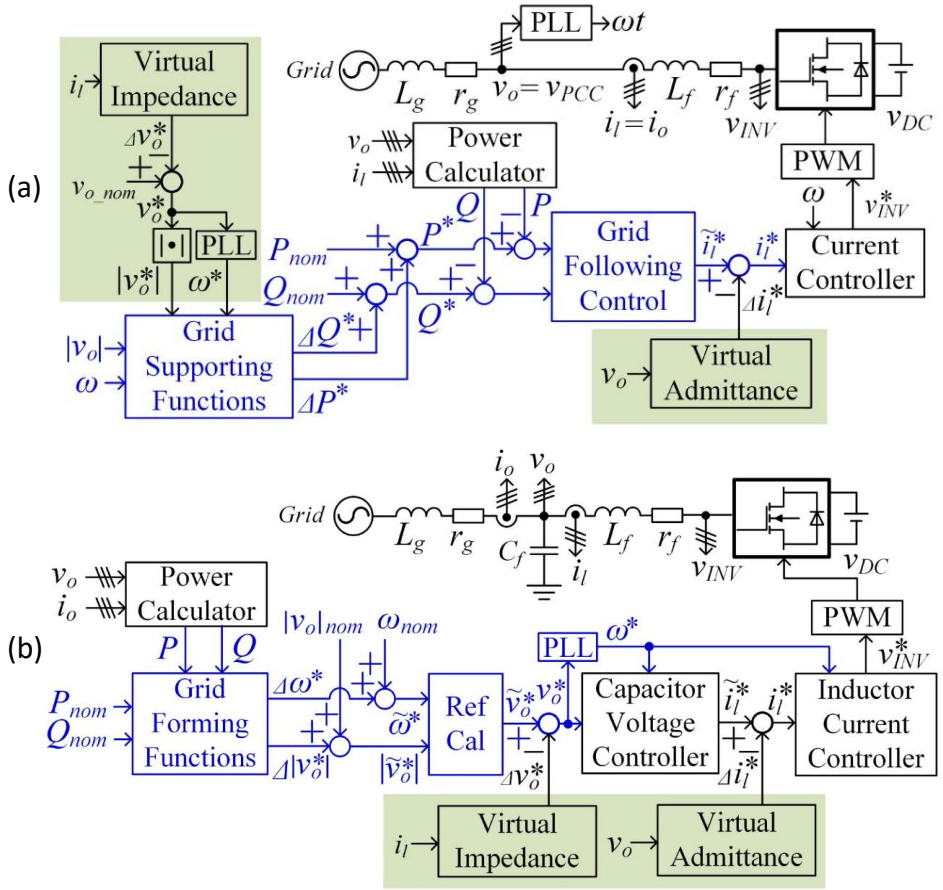

Figure 2.6. Control structure of grid following and grid forming converters. (a) The grid-following converter. (b) The grid-forming converter. [8]

[8] S. Yan, L. Meegahapola, Y. Yang and F. Blaabjerg, "Grid-Supporting Renewable Energy Systems With Power Electronics Interfaces," 2025

Classifications on [7] & [8] Identified in General Configurations

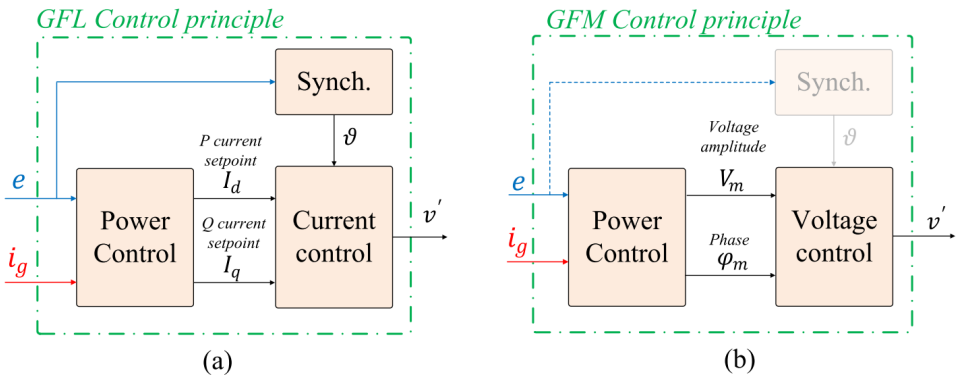

Figure 2.5.
Working principles Grid:
(a) Following,
(b) Forming. [7]

Identified configurations

- Grid-Forming → Voltage control based modes.
- Grid-Following → Current control based modes.

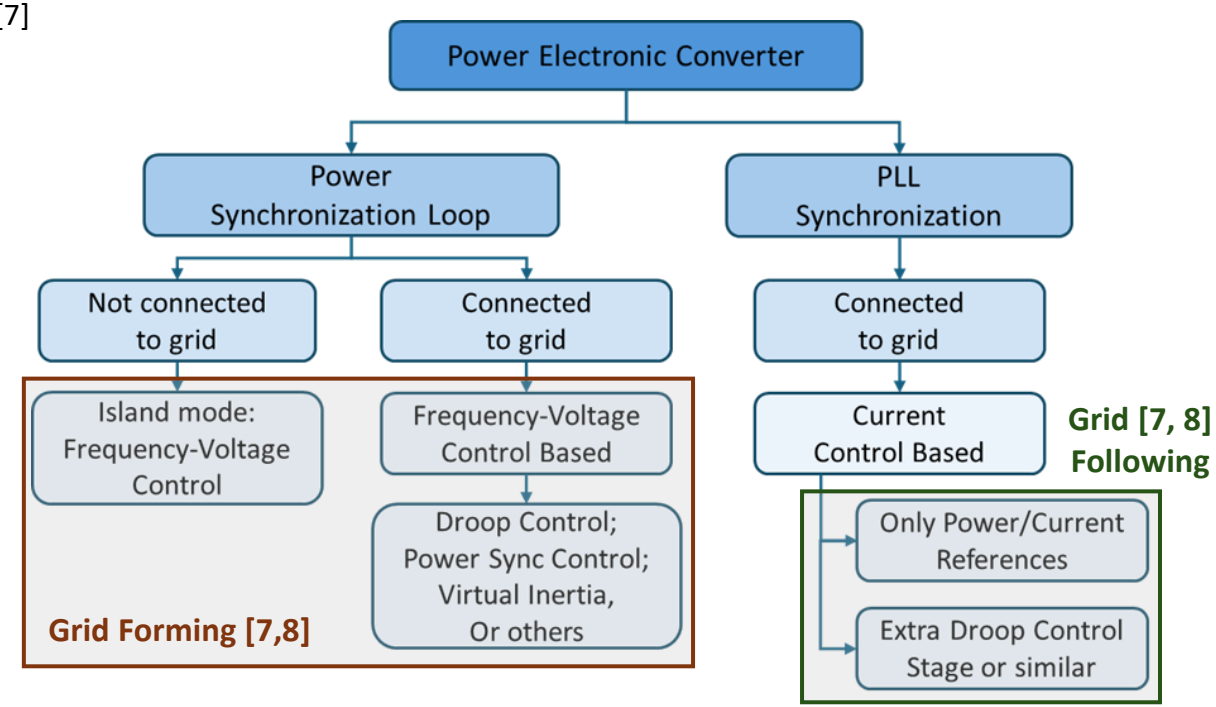

Figure 2.7. Converter connections and configurations identifying classifications on [7] and [8]

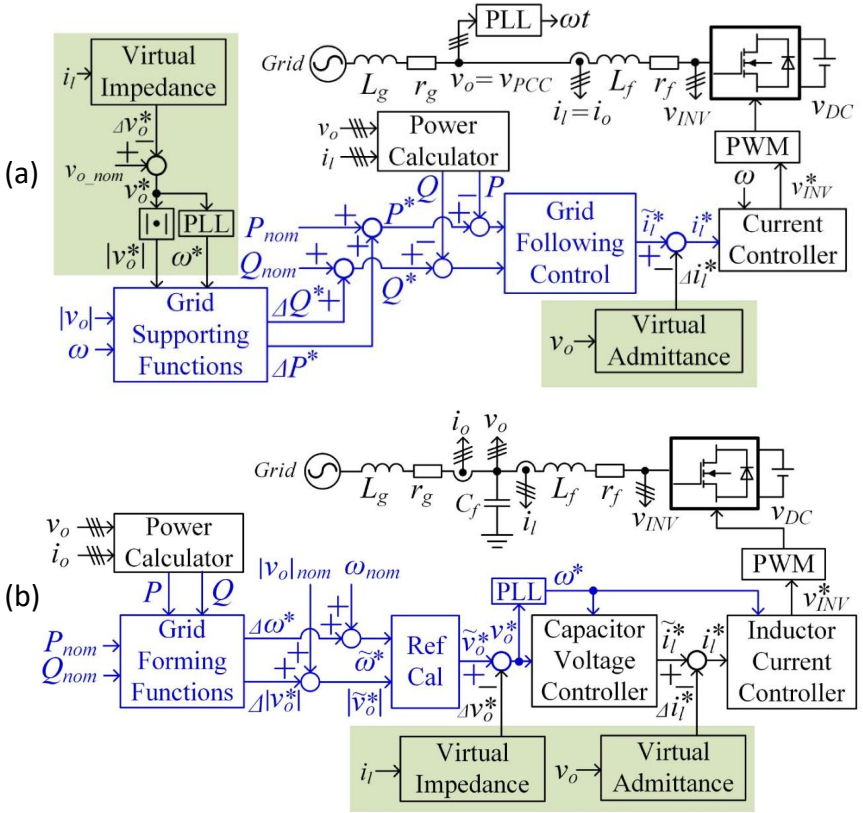

Figure 2.6. Control structure of converters Grid:
(a) Following,
(b) Forming. [8]

2.2: Grid-Connected Converters

Main Configurations

Grid Supporting with Floating DC-Link

Concept: Converter operates connected to an existing grid, injecting reactive power and/or harmonic compensation. [1]

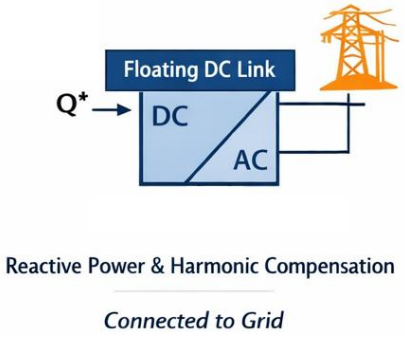

Key Features

- Exchanges reactive power (Q) with the grid for voltage regulation.
- Active power exchange is limited and mainly used to regulate DC-link voltage.
- Supports voltage regulation and power-quality improvement.

Control Structure

- DC-Link voltage control with floating DC-Link.
- Current-controlled in dq or $\alpha\beta$.
- May include harmonic resonant controllers (PR or selective harmonic compensators).

Applications: STATCOMs, active filters, voltage support in weak grids, industrial PQ correction.

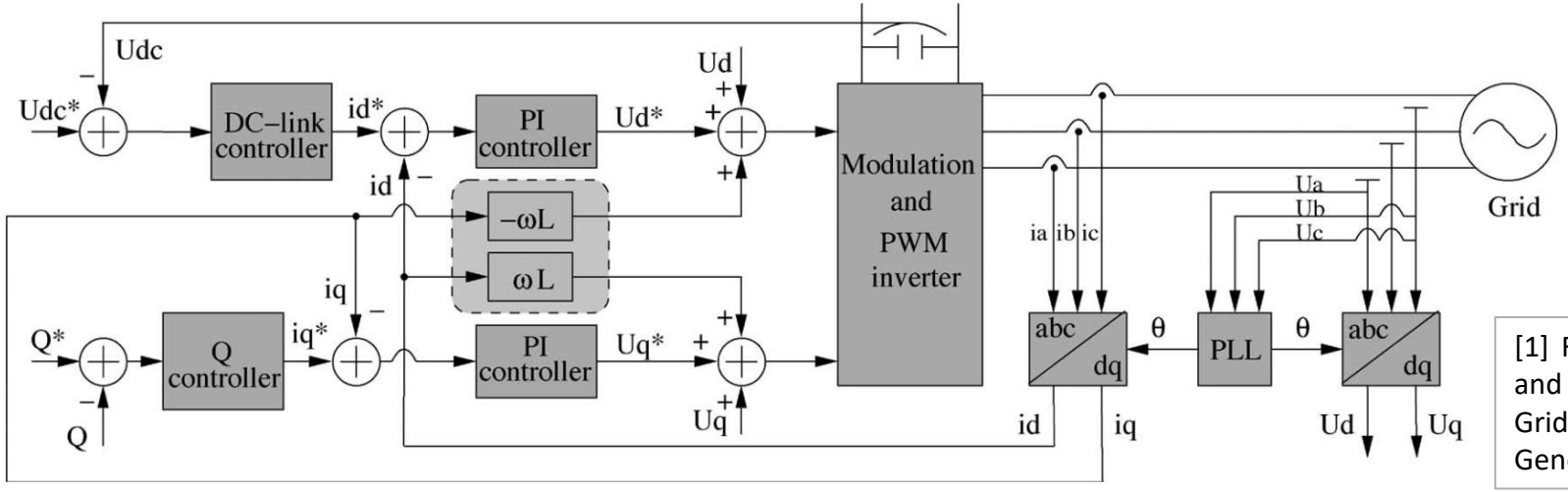

[1] F. Blaabjerg, R. Teodorescu, M. Liserre and A. V. Timbus, "Overview of Control and Grid Synchronization for Distributed Power Generation Systems," 2006

Figure 2.8. General Grid Supporting Control Scheme for PWM Inverter with Floating DC-Link. [1]

Grid-Connected Converter: *Dynamic Modelling in dq frame (1)*

1. AC-side electrical model in abc frame

Consider a grid-connected VSC with an L filter:

$$\mathbf{v}_{abc} = R\mathbf{i}_{abc} + L\frac{d\mathbf{i}_{abc}}{dt} + \mathbf{v}_{g,abc}$$

where $\mathbf{v}_{abc}$ are converter phase voltages, $\mathbf{i}_{abc}$ are grid currents, $\mathbf{v}_{g,abc}$ are grid phase voltages and R, L are filter parameters.

This model is time-varying due to the sinusoidal grid voltages.

2. Clarke transformation: $abc \rightarrow \alpha\beta$

Applying Clarke Transform, invariant in amplitude in this procedure:

$$\mathbf{v}_{\alpha\beta} = R\mathbf{i}_{\alpha\beta} + L\frac{d\mathbf{i}_{\alpha\beta}}{dt} + \mathbf{v}_{g,\alpha\beta}$$

This model is still sinusoidal, but now in a stationary orthogonal frame.

3. Park transformation: $\alpha\beta \rightarrow dq$ (rotating frame)

The Park transform rotates the reference frame at angular speed ω:

$$\begin{bmatrix} x_d \\ x_q \end{bmatrix} = \begin{bmatrix} \cos(\theta) & \sin(\theta) \\ -\sin(\theta) & \cos(\theta) \end{bmatrix} \begin{bmatrix} x_\alpha \\ x_\beta \end{bmatrix}, \text{ with } \frac{d\theta}{dt} = \dot{\theta} = \omega$$

Apply Park Transform to currents:

$$\mathbf{i}_{dq} = T(\theta)\,\mathbf{i}_{\alpha\beta}$$

4. Time derivative in a rotating frame

When differentiating $\mathbf{i}_{dq}$, derivative chain rule must be applied:

$$\frac{d\mathbf{i}_{dq}}{dt} = T(\theta)\frac{d\mathbf{i}_{\alpha\beta}}{dt} + \dot{T}(\theta)\mathbf{i}_{\alpha\beta}$$

where $\dot{\theta} = \omega$

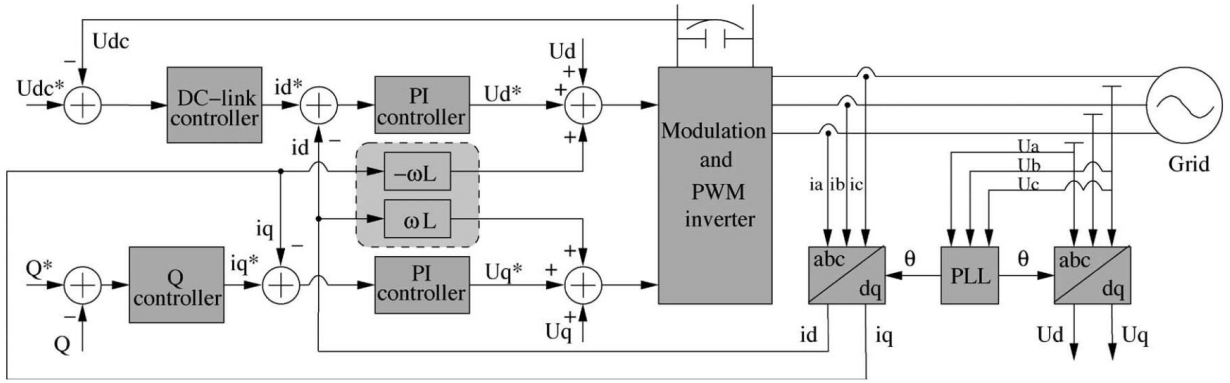

Figure 2.8. General Grid Supporting Control Scheme with Floating DC-Link. [1]

Grid-Connected Converter: *Dynamic Modelling in dq frame (2)*

Current in dq frame: $\mathbf{i}_{dq} = T(\theta)\,\mathbf{i}_{\alpha\beta}$

Differentiating $\mathbf{i}_{dq}$: $\dfrac{d\mathbf{i}_{dq}}{dt} = T(\theta)\dfrac{d\mathbf{i}_{\alpha\beta}}{dt} + \dot{T}(\theta)\mathbf{i}_{\alpha\beta}$

<u>Key step:</u> derivative of the rotation matrix (use $\dot{\theta} = \omega$)

$$\dot{T}(\theta) = \frac{d}{dt}\begin{bmatrix} \cos(\theta) & \sin(\theta) \\ -\sin(\theta) & \cos(\theta) \end{bmatrix} = \begin{bmatrix} -\sin(\theta) & \cos(\theta) \\ -\cos(\theta) & -\sin(\theta) \end{bmatrix}\omega$$

then is demonstrable:

$$\dot{T}(\theta) = \omega\begin{bmatrix} -\sin(\theta) & \cos(\theta) \\ -\cos(\theta) & -\sin(\theta) \end{bmatrix} = \omega\begin{bmatrix} 0 & 1 \\ -1 & 0 \end{bmatrix}T(\theta)$$

Substituting:

$$\frac{d\mathbf{i}_{dq}}{dt} = T(\theta)\frac{d\mathbf{i}_{\alpha\beta}}{dt} + \omega\begin{bmatrix} 0 & 1 \\ -1 & 0 \end{bmatrix}\mathbf{i}_{dq}$$

5. Final dynamic model in the dq frame using $\alpha\beta$ model:

$$\mathbf{v}_{dq} = R\mathbf{i}_{dq} + L\frac{d\mathbf{i}_{dq}}{dt} - \omega L\begin{bmatrix} 0 & -1 \\ 1 & 0 \end{bmatrix}\mathbf{i}_{dq} + \mathbf{v}_{g,dq}$$

Expanded:

$$v_d = Ri_d + L\frac{di_d}{dt} - \omega L i_q + v_{g,d}$$
$$v_q = Ri_q + L\frac{di_q}{dt} + \omega L i_d + v_{g,q}$$

6. Coupling terms meaning: $-\omega L i_q$ and $+\omega L i_d$

- These terms appear only because the reference frame is rotating.
- Represent the voltage required to "rotate" the current vector with the grid.

7. Decoupling in current control

To obtain independent i_d and i_q control, feed-forward compensation is used:

$$v_d^* = v_d^{PI} + \omega L i_q + v_{g,d}$$
$$v_q^* = v_q^{PI} - \omega L i_d + v_{g,q}$$

Substituting into the dq voltage equations gives:

$$L\frac{di_d}{dt} + Ri_d = v_d^{PI}$$
$$L\frac{di_q}{dt} + Ri_q = v_q^{PI}$$

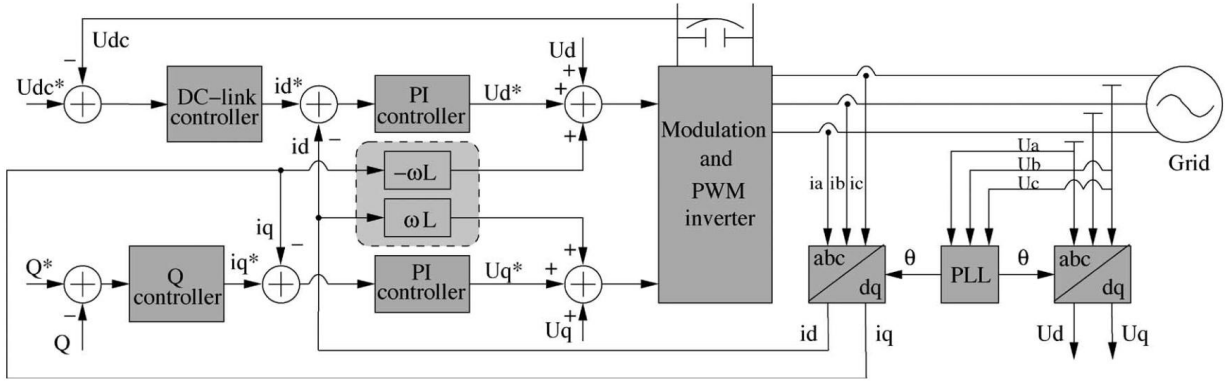

Figure 2.8. General Grid Supporting Control Scheme with Floating DC-Link. [1]

Grid-Connected Converter: *Dynamic Modelling in dq frame (3)*

8. Instantaneous power in the $\alpha\beta$ reference frame

For a balanced three-phase system (no zero sequence), the instantaneous active and reactive power expressed in $\alpha\beta$ frame from Clarke Transform power-invariant are defined as:

$$p = v_\alpha i_\alpha + v_\beta i_\beta$$
$$q = v_\beta i_\alpha - v_\alpha i_\beta$$

This formulation is exact and independent of any control assumptions.

9. Instantaneous power expressed in the dq frame

Applying Park Transform to voltages and current in $\alpha\beta$ frame, and substituting into power definition, it's obtained:

$$p = v_d i_d + v_q i_q$$
$$q = v_q i_d - v_d i_q$$

This result is still general: without any assumption.

10. Voltage-oriented reference frame (key assumption)

In grid-connected converters, the Park angle θ is chosen such that the d-axis is aligned with the grid voltage vector. Therefore:

$$\boldsymbol{v_{g,d}} = |\boldsymbol{v_g}| \quad , \quad \boldsymbol{v_{g,q}} = \mathbf{0}$$

11. Power equations under voltage orientation

- Active power: $\boldsymbol{p = v_d i_d}$
- Reactive power: $\boldsymbol{q = -v_q i_q}$
- This expressions has been obtained using Clarke Transform power invariant, but Clarke Transform amplitude invariant is also used.

- Expressions for active and reactive power with Clarke amplitude-invariant:
  - Active power: $\boldsymbol{p = \frac{3}{2} v_d i_d}$
  - Reactive power: $\boldsymbol{q = -\frac{3}{2} v_q i_q}$

Then, after compensation, decoupled control allow:
- d-axis → active power control / DC-Link control
- q-axis → reactive power control / voltage support

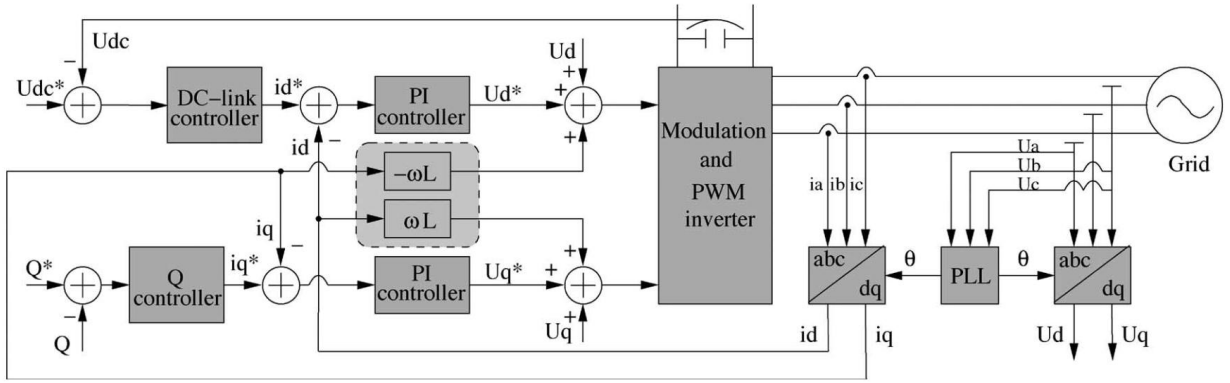

Figure 2.8. General Grid Supporting Control Scheme with Floating DC-Link. [1]

Grid Following Converters

Concept

- Converter behaves as a current-controlled source delivering commanded active and reactive power.

Key Features

- Uses PLL to synchronize with grid voltage phase and frequency.
- Injects P_{ref} and Q_{ref} trough power references with outer control loop or direct current references.
- Inner current loop ensures fast response and good dynamic performance.

Typical Control Structure

- Inner loop: dq-current PI or $\alpha\beta$-PR control.
- Outer loop: P/Q regulation.
- Modulation: SPWM / THIPWM / SVPWM.

Applications

- PV inverters, battery inverters operating grid-tied, EV chargers, industrial drives in grid-tie mode.

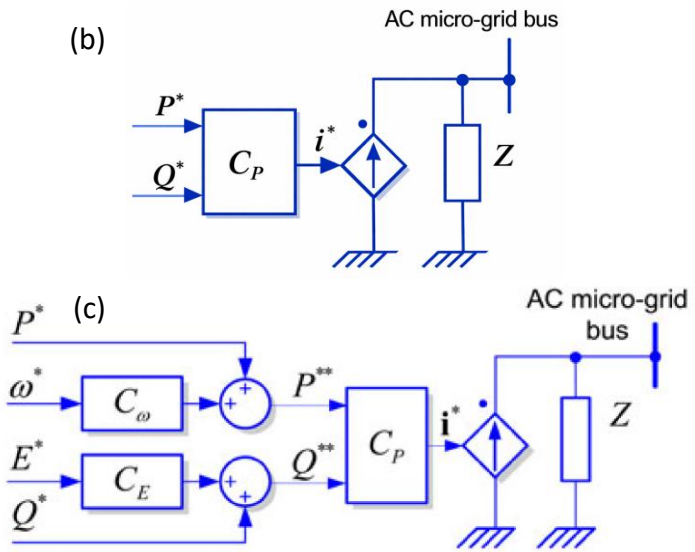

Figure 2.9. Simplified representation of grid-connected power converters. (b) grid-feeding, (c) current-source-based grid-supporting. [6]

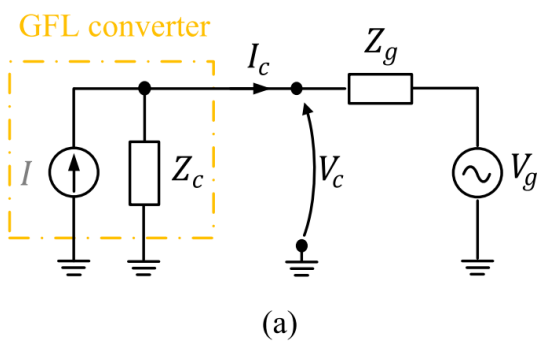

Figure 2.10. Simplified representation of a GFL converter. [7]

Grid Following: Only Power/Current References

Operating principle

- Converter tracks only power or current references.
- Grid voltage magnitude and frequency are assumed to be imposed by the grid.

Characteristics

- No participation in grid voltage or frequency regulation.
- Stability strongly dependent on:
  - PLL robustness,
  - grid strength (SCR).

Limitations

- Vulnerable in weak grids.
- PLL and current loop interactions may destabilize operation.
- Cannot operate in islanded mode.

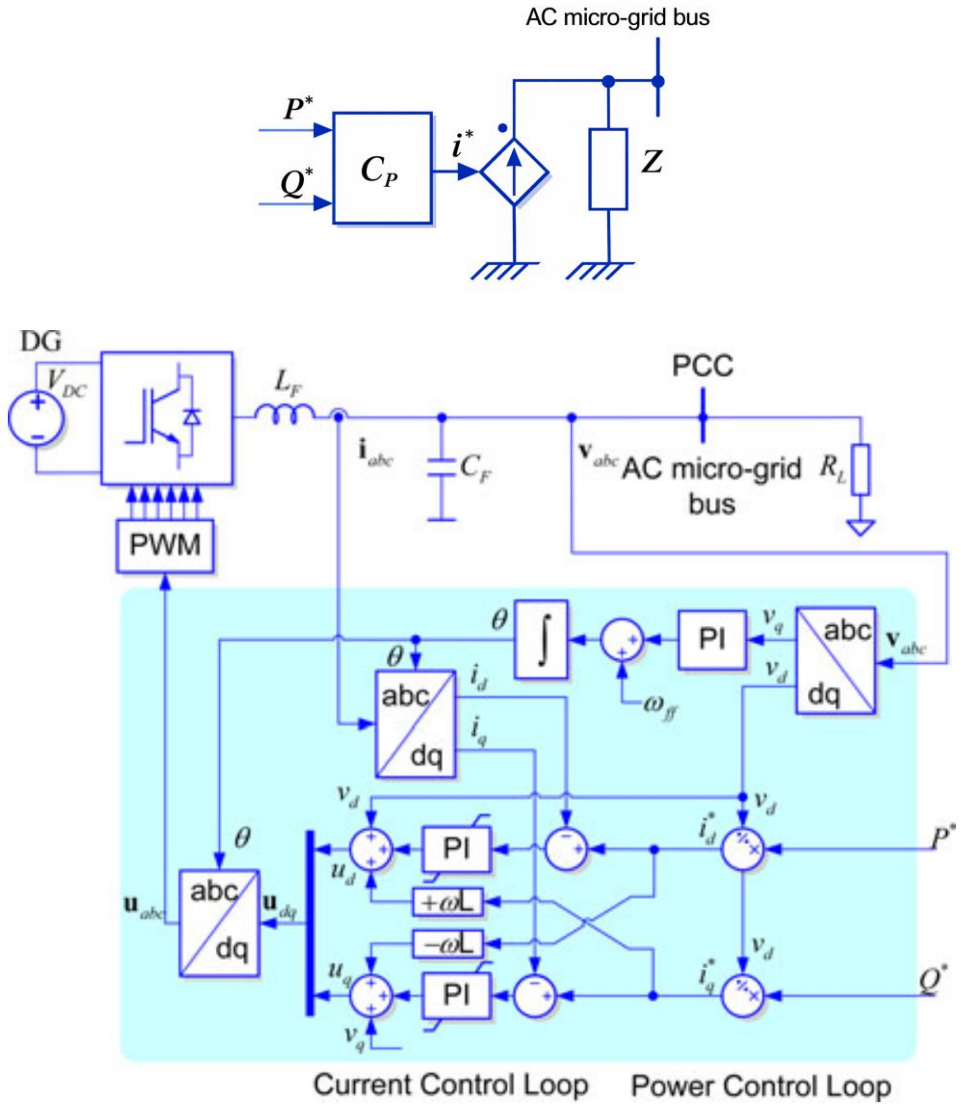

Figure 2.11. Basic control structure in a three-phase grid-feeding power converter. [6]

Grid Following-Supporting, on [6]

Concept

- Grid-feeding converter enhanced with grid-supporting capability.
- Still synchronized by PLL, but P/Q references are modified by grid conditions.

Key features

- Basic current-controlled structure preserved.
- Addition of:
  - P–f droop,
  - Q–V droop.
- Enables partial contribution to frequency and voltage regulation.

Interpretation

- Converter remains grid-dependent.
- Support is conditional, not forming.

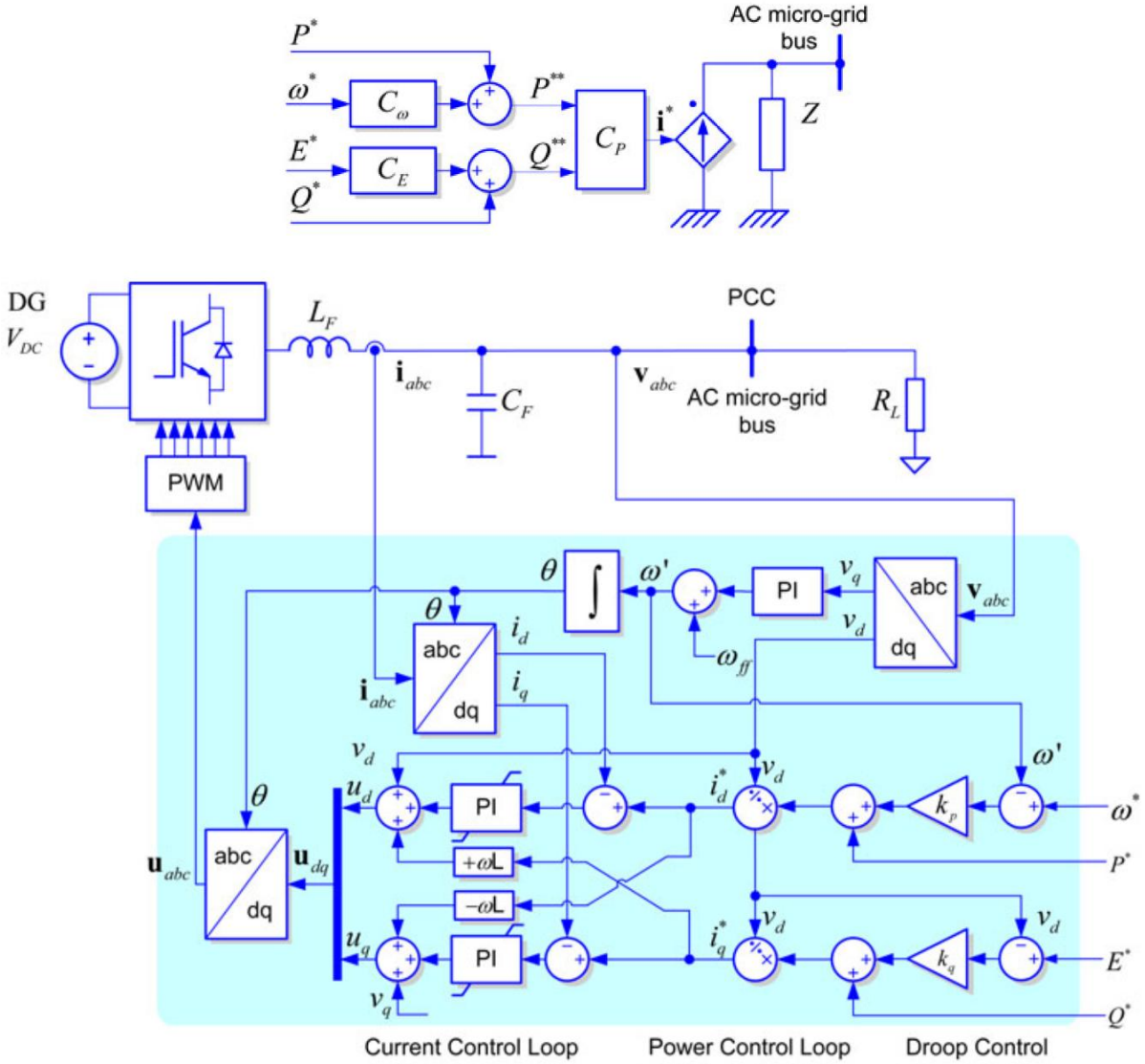

Figure 2.12. Basic control structure of Grid-supporting power converter operating as a current source. [6]

Grid Following-Supporting, on [8]

Extended view in [8]

- Grid-following converters can provide ancillary services while remaining synchronized to the grid.

Supported functions

- Frequency support via active power control.
- Voltage support via reactive power injection.
- LVRT/FRT reactive current injection during faults.

Control implementations

- Simple current based control.
- Droop-based power control.
- PI-based power regulation with support layers.

Key idea

- Grid-**supporting is a functional extension**, not a new hardware class.

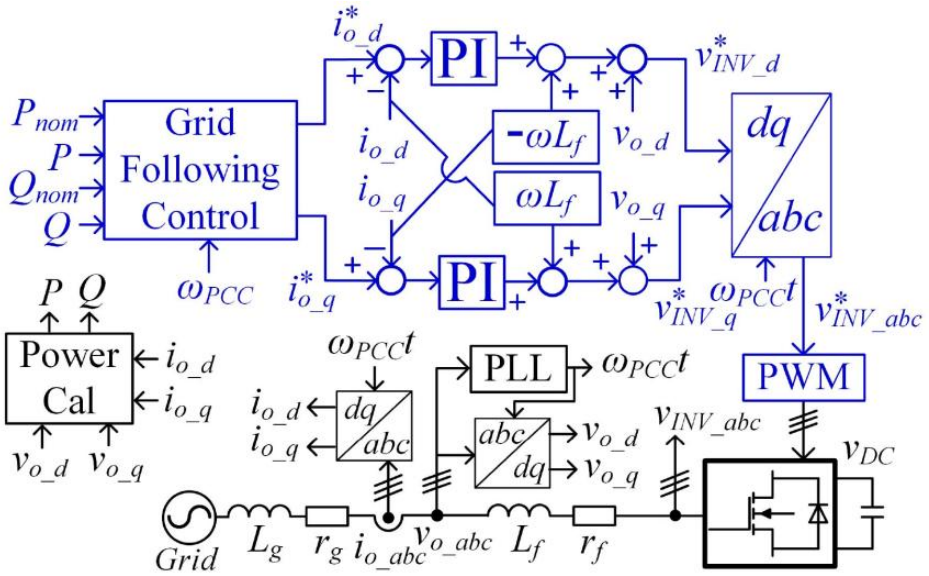

Figure 2.13. Typical Grid Following Control Scheme in dq frame[8]

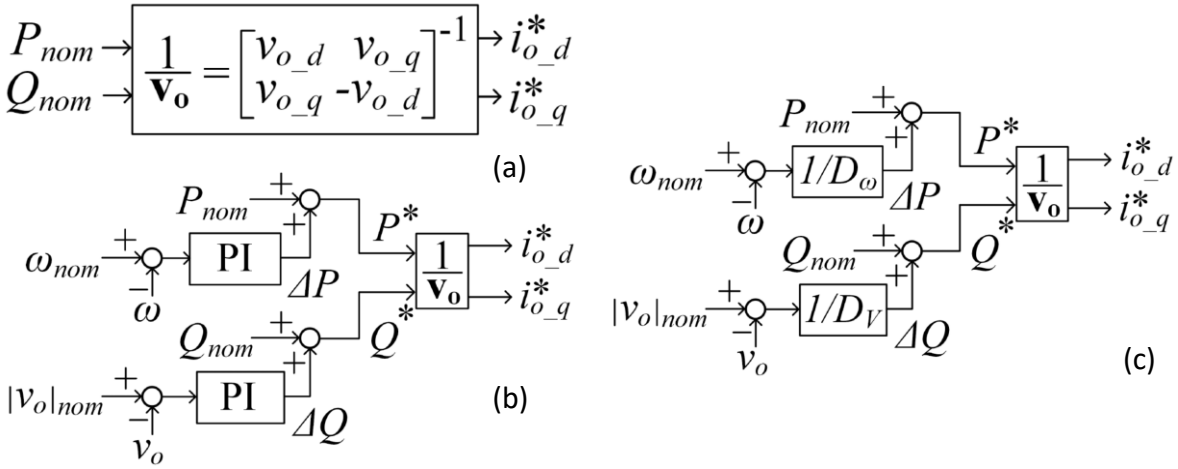

Figure 2.14. Typical grid integration control of GFLC (a) Simple power control. (b) Droop control. (c) PI-based power control. [8]

Comparison Following vs Following-Supporting

- Grid-following and grid-following-supporting control schemes (or grid-supporting as a current source) are identical in their current control stage and differ only in the inclusion of support functions, such as droop loops for frequency (P) and voltage (Q).
- Although both remain grid-dependent via a PLL, the support functions provide limited voltage and frequency support and improve stability margins in weak grids.

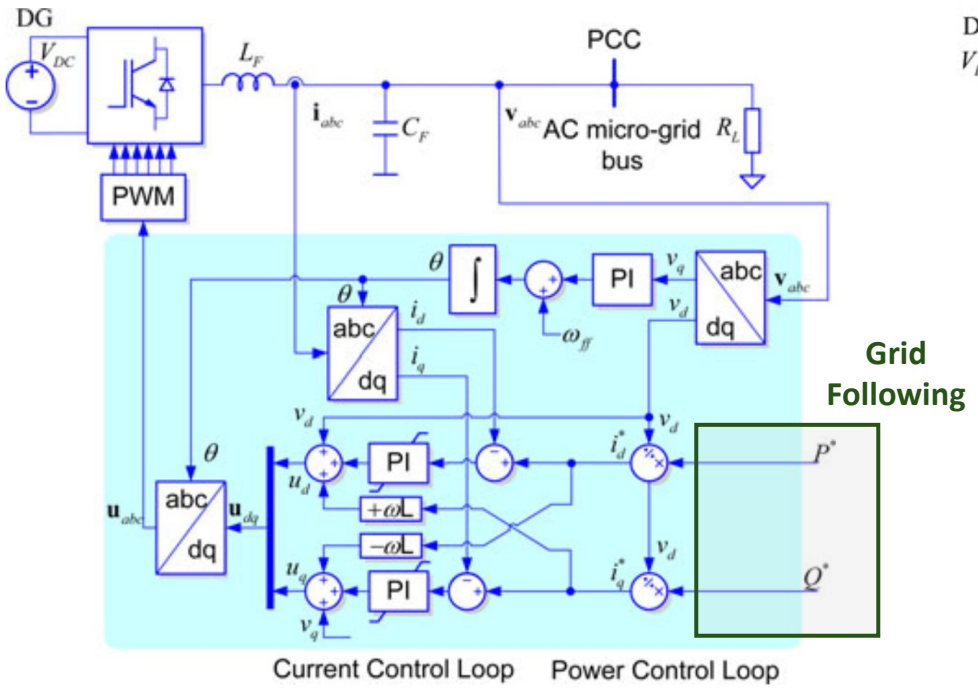

Figure 2.11. Basic control structure in a three-phase grid-feeding power converter. [6]

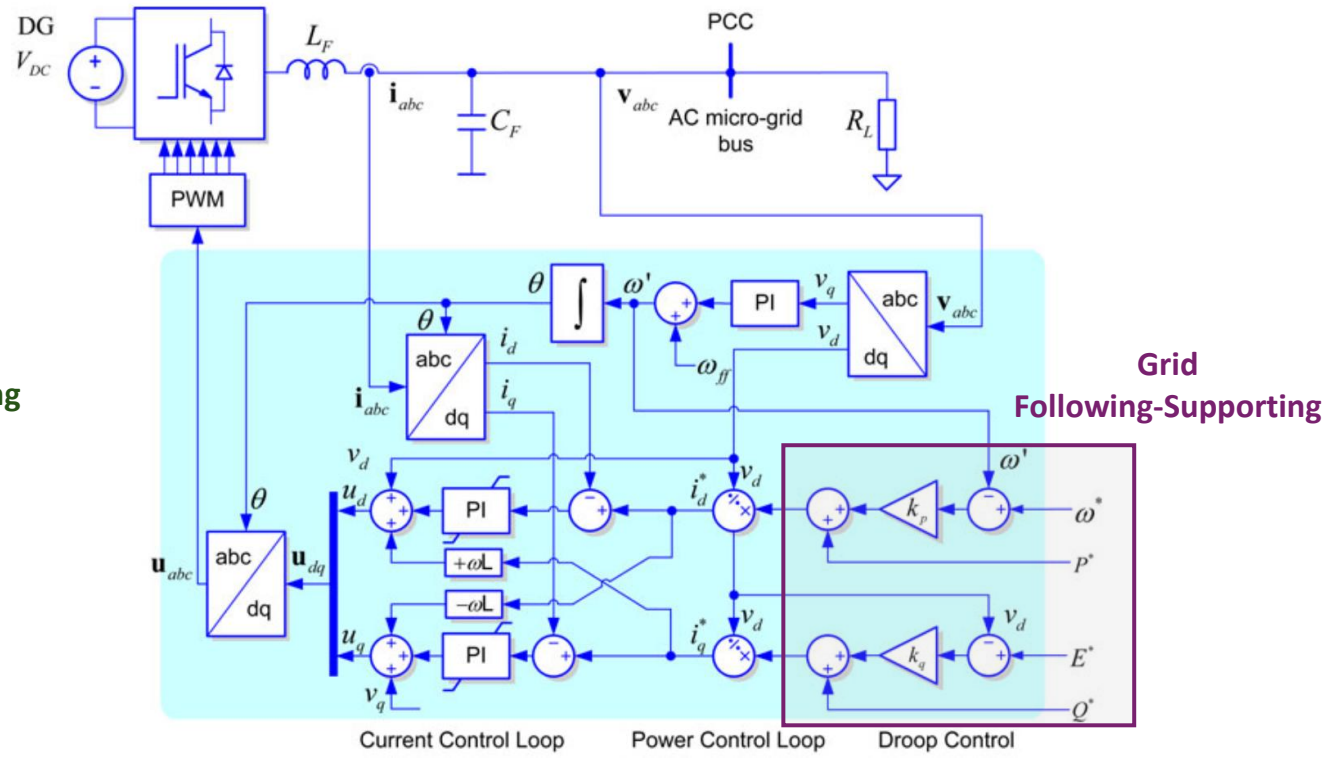

Figure 2.12. Basic control structure of Grid-supporting power converter operating as a current source. [6]

Grid Forming: Island Mode

Concept

- Converter acts as an independent voltage source, setting the local voltage and frequency.
- Provides reference for an islanded microgrid without relying on the main grid.

Key Features

- Establishes voltage and frequency autonomously.
- Handles load changes and disturbances with stable voltage behavior.
- Enables black-start and standalone operation

Control Structure

- Outer voltage control loop (forms the grid).
- Output filter capacitor is required to regulate the output voltage.
- Inner current loop for converter protection and shaping.

Applications

- Standalone microgrids and UPS systems.
- Black-start units for restoration.
- Battery energy storage systems acting as master unit.

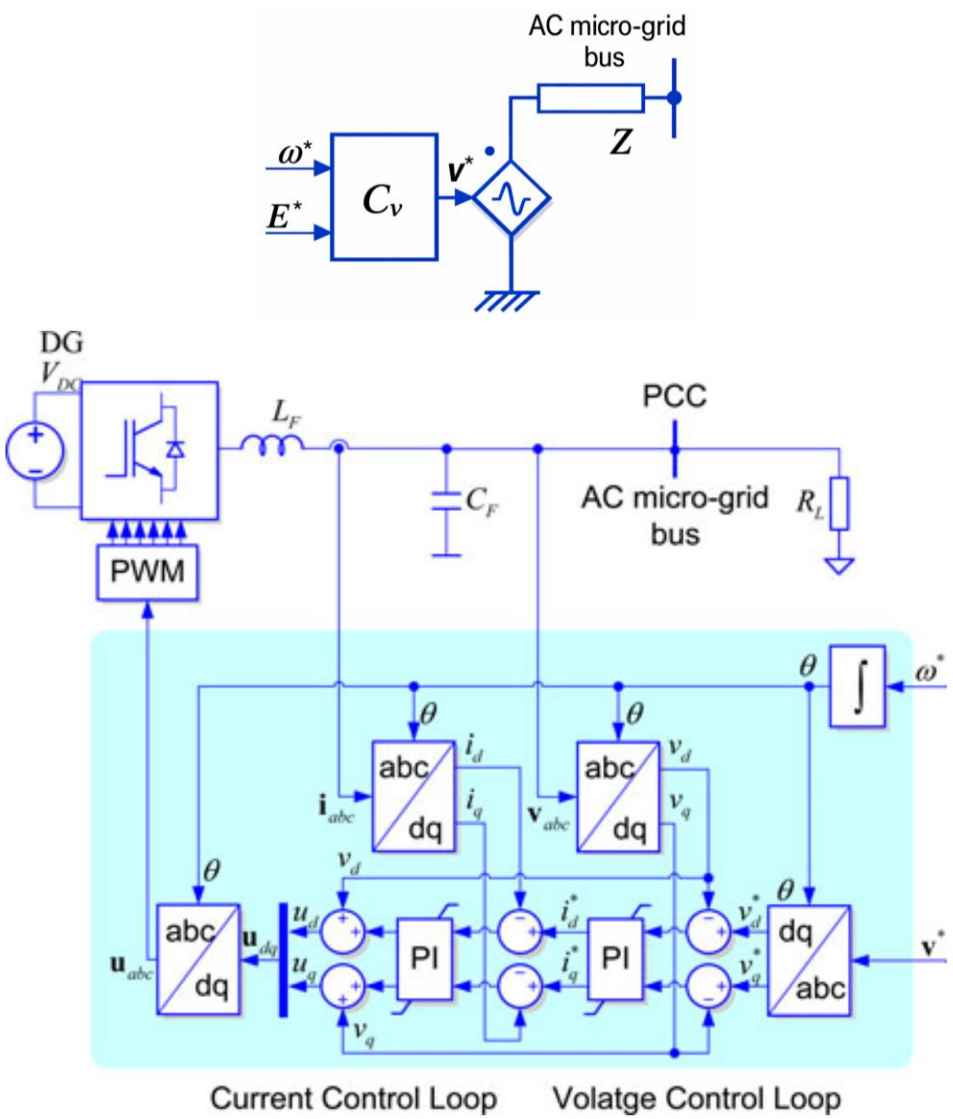

Figure 2.15. Basic control structure in a three-phase grid-forming voltage source inverter generating a sinusoidal voltage determined by a nominal voltage amplitude v^* and reference frequency ω^*. [6]

Grid Forming-Supporting

Concept

- GFM unit regulates voltage and frequency using droop loops while sharing load with other units.
- Can mimics synchronous generator behavior: frequency decreases with active power (P–f droop), voltage decreases with reactive power (Q–V droop).

Key Features

- Active power sharing via P–f droop; reactive sharing via Q–V droop. (PD)
- Synchronized with a Power Synchronization Loop. [3]
- Although a dedicated synchronization unit is not necessary for normal operation, a back-up PLL is employed for pre-synchronization purposes, as well as for operation during grid faults. [3]
- Supports decentralized coordination without communication.
- Supports multi-inverter microgrids.
- Works in islanded mode or in weak-grid-connected scenarios.

Control Structure

- Droop layer defines f* and V* based on P/Q deviations (or Psync)
- Voltage loop + optional current protection loop.
- Compatible with virtual inertia/damping enhancements.

Applications

- Multi-inverter microgrids with shared generation/storage.
- Hybrid RES + BESS requiring coordinated islanded operation.
- Weak grids needing forming capability.

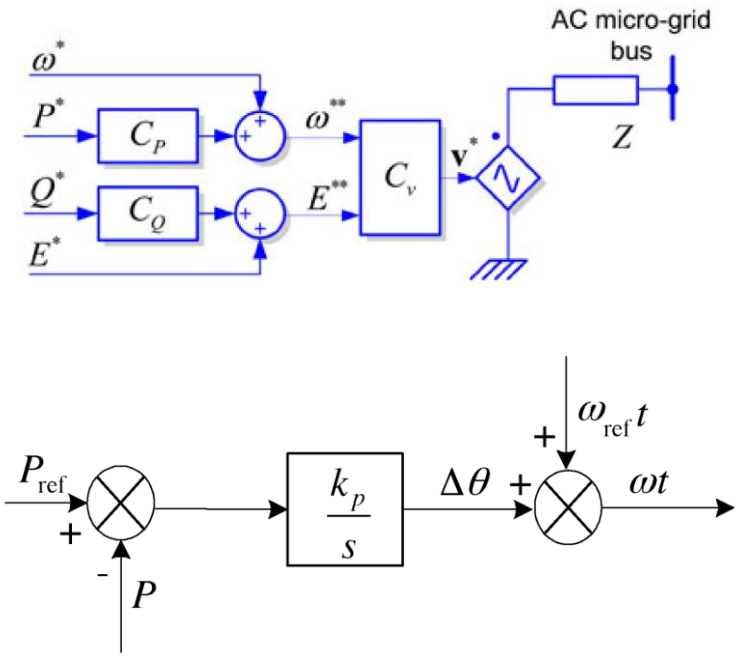

Figure 2.16. Power-synchronization loop. [3]

Grid Forming-Supporting, on [6]

Interpretation in [6]

- Grid-forming-supporting converters are implemented as voltage sources with output (real or virtual) impedance.
- Power sharing emerges naturally from voltage–frequency droop characteristics, without communication.

Key characteristics

- Voltage magnitude and frequency are controlled locally.
- Virtual impedance is introduced to shape power flow, improve stability and decouple control behavior from line impedance.
- Power sharing depends on droop coefficients and output impedance.

Control perspective

- Droop control (P–f, Q–V) forms the core of GFM-supporting.
- Synchronization with the main grid is required only during reconnection.
- Suitable for both islanded mode and grid-connected operation.

Main contribution of [6]: Establishes the foundational droop-based GFM-supporting model used in AC microgrids.

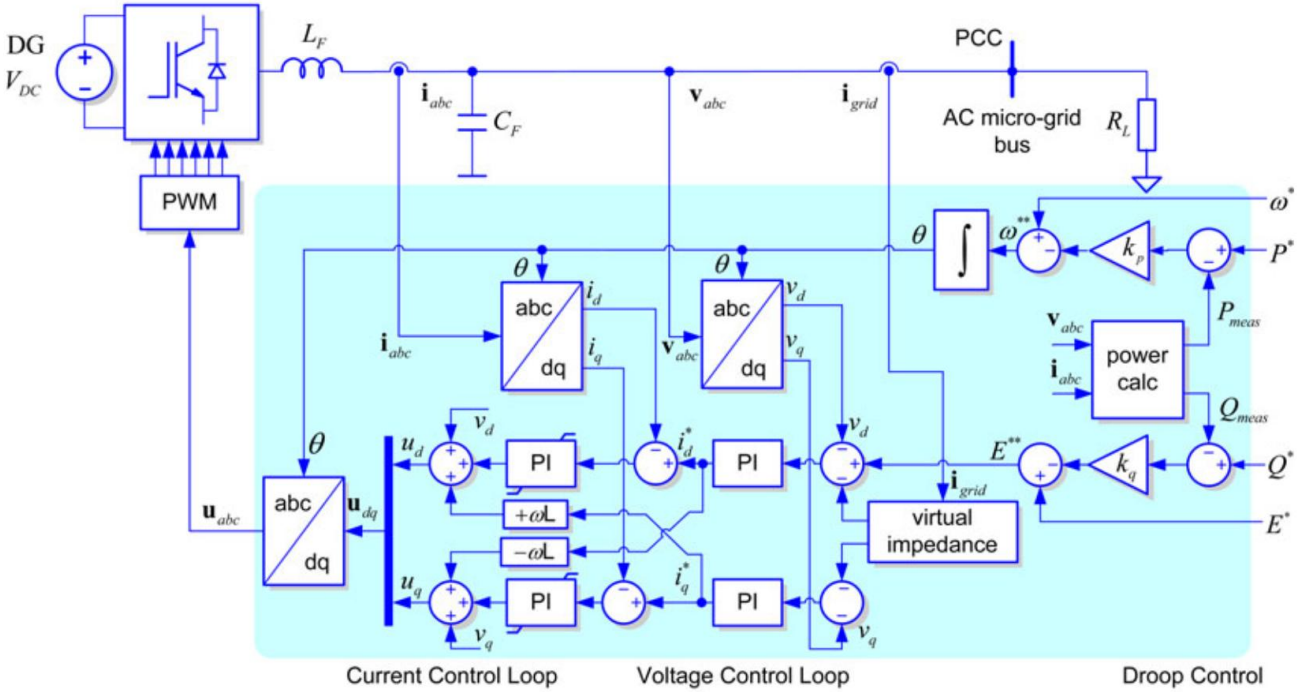

Figure 2.17. Basic control structure of Grid supporting power converter operating as a voltage source. [6]

Grid Forming-Supporting, on [7]

Control view

- Treats Grid-forming as a family of control approaches with grid supporting functions, not a single structure for grid-supporting converter.
- Outer Loop with Power Synchronization Loop and Voltage profile management.
- Inner Loop with Voltage Control and Current Control Loops.

Main GFM-Supporting variants without PLL required for normal operation

- Droop based GFM: Power sharing through steady-state P–f and Q–V relationships.
- Power Synchronization Control (PSC): power-angle relationship for synchronization.

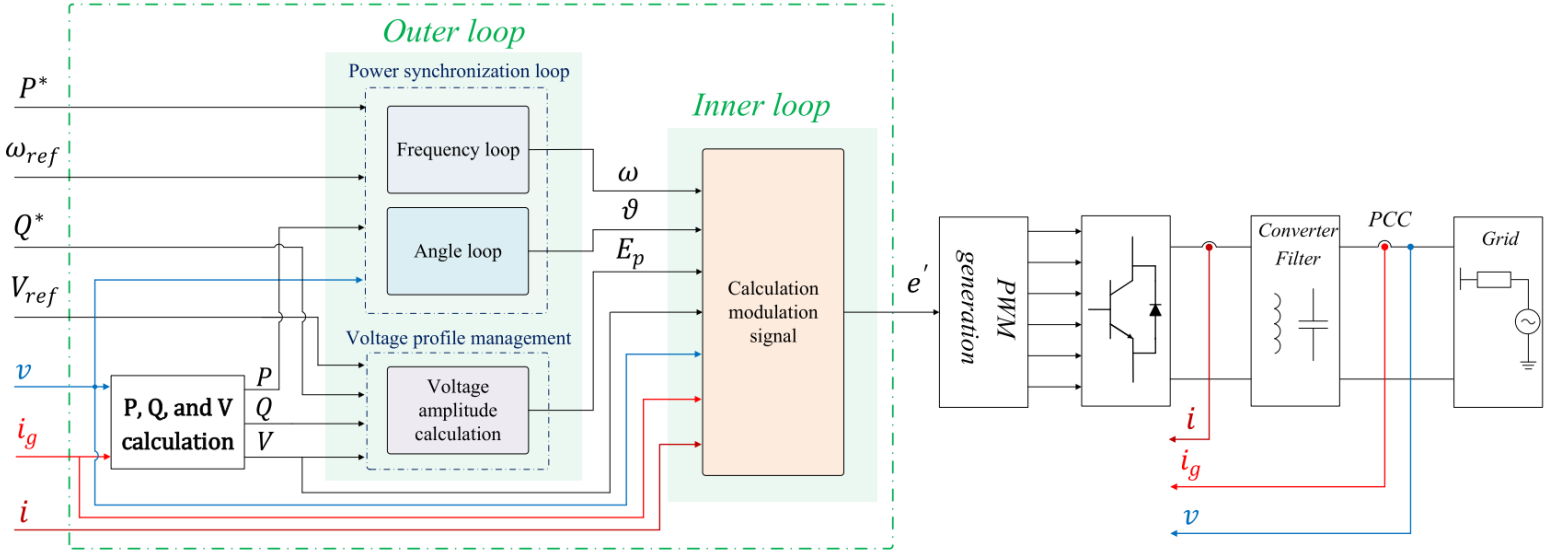

Figure 2.18. Generalized control structure of a GFM converter with Power Synchronization Loop. [7]

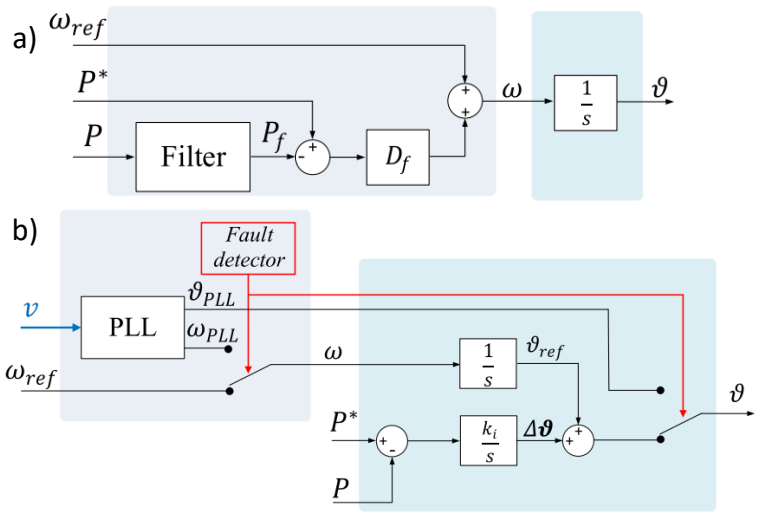

Figure 2.19. Typical power synchronization loops: a) **Frequency droop control**; b) power control. [7]

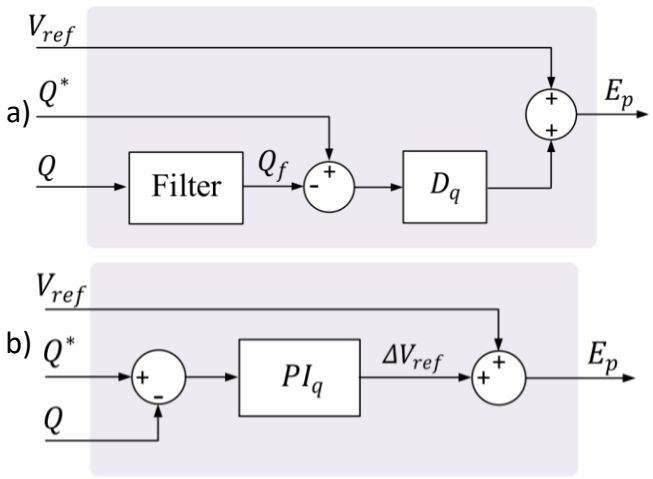

Figure 2.20. Typical voltage profile loops: a) Droop control; b) reactive power control. [7]

Grid Forming-Supporting, on [8]

Control view

- Similar [7], consider Grid-Forming Converter with supporting functions.
- Outer Loop with Grid Forming Control (GFMC)
- Inner Loop with Voltage Control and Current Control Loops.

Main GFM-Supporting variants without PLL required for normal operation

- <u>Droop based GFM:</u> P–f and Q–V droop relationships.
- <u>Power Synchronization Control (PSC):</u> power-angle relationship for synchronization.
- <u>Virtual synchronous generator</u>: emulates rotating machine power dynamic

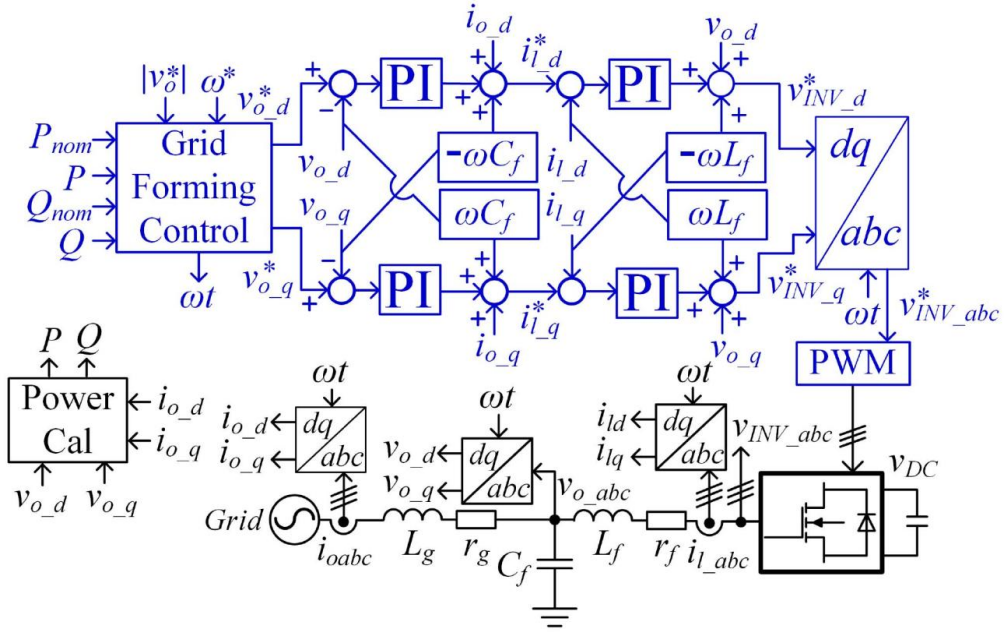

Figure 2.21. Typical converter control loops of Grid Forming Converter. [8]

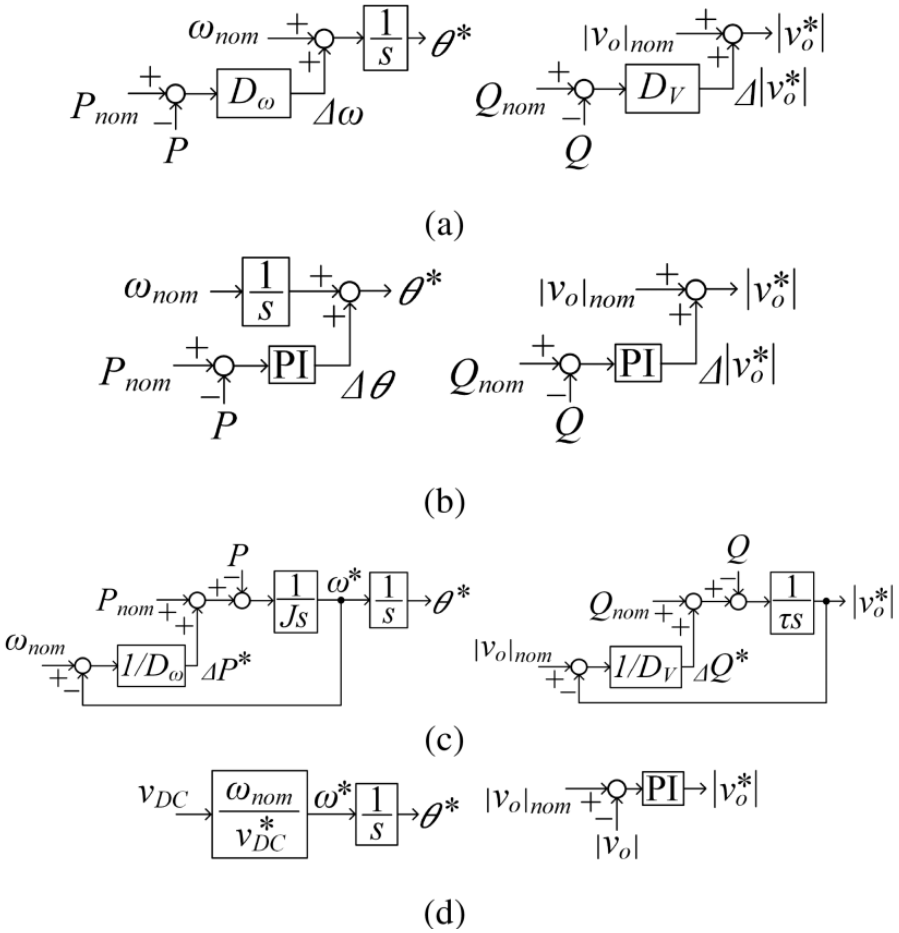

Figure 2.22. Typical grid integration controls of GFMC. **(a) Droop control**. (b) **Power synchronization control**. (c) Virtual synchronous generator control. (d) Matching control. [8]

Comparison Forming Island vs Forming-Supporting

- The control schemes for grid-forming island mode and grid-forming supporting mode are identical in their voltage control and current control stages. They differ in the outer loop stage: in island mode, the voltage and frequency reference is direct, whereas in grid-forming supporting mode, additional loops are included to implement the support functions.
- It is important to note that the grid-forming-supporting converter:
  - Does not require a PLL for normal operation, but it is required for pre synchronization and operation during grid faults.
  - With power synchronization loops, it can operate in island mode in the event of a grid disconnection.

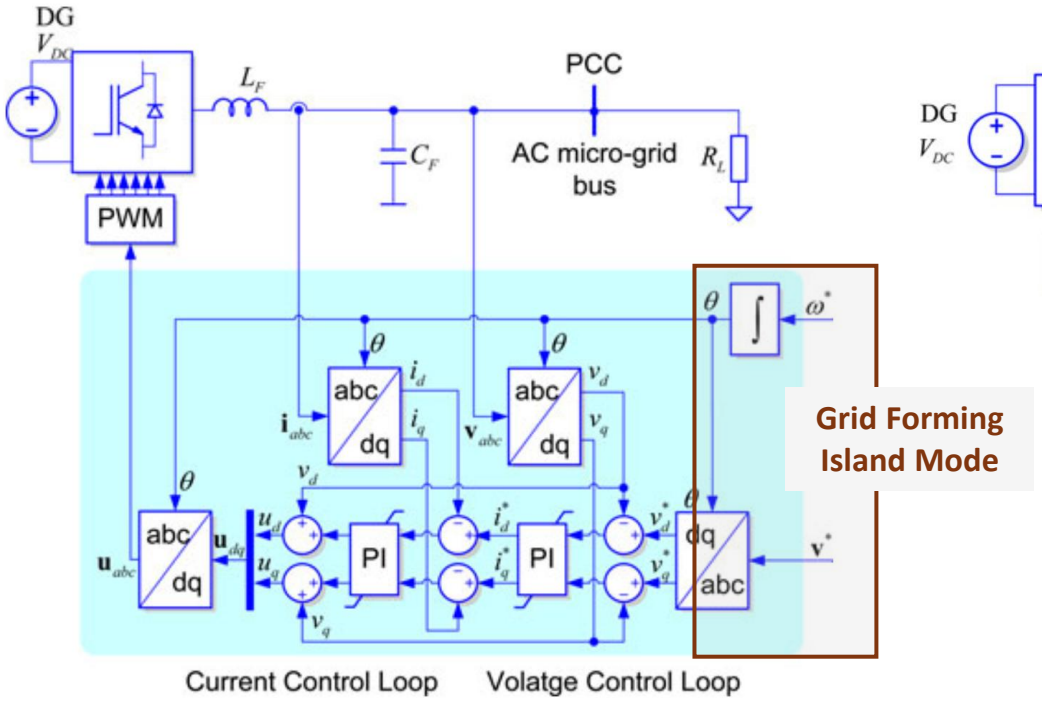

Figure 2.16. Basic control structure in a three-phase grid-forming voltage source inverter generating a sinusoidal voltage determined by a nominal voltage amplitude v^* and reference frequency ω^*. [6]

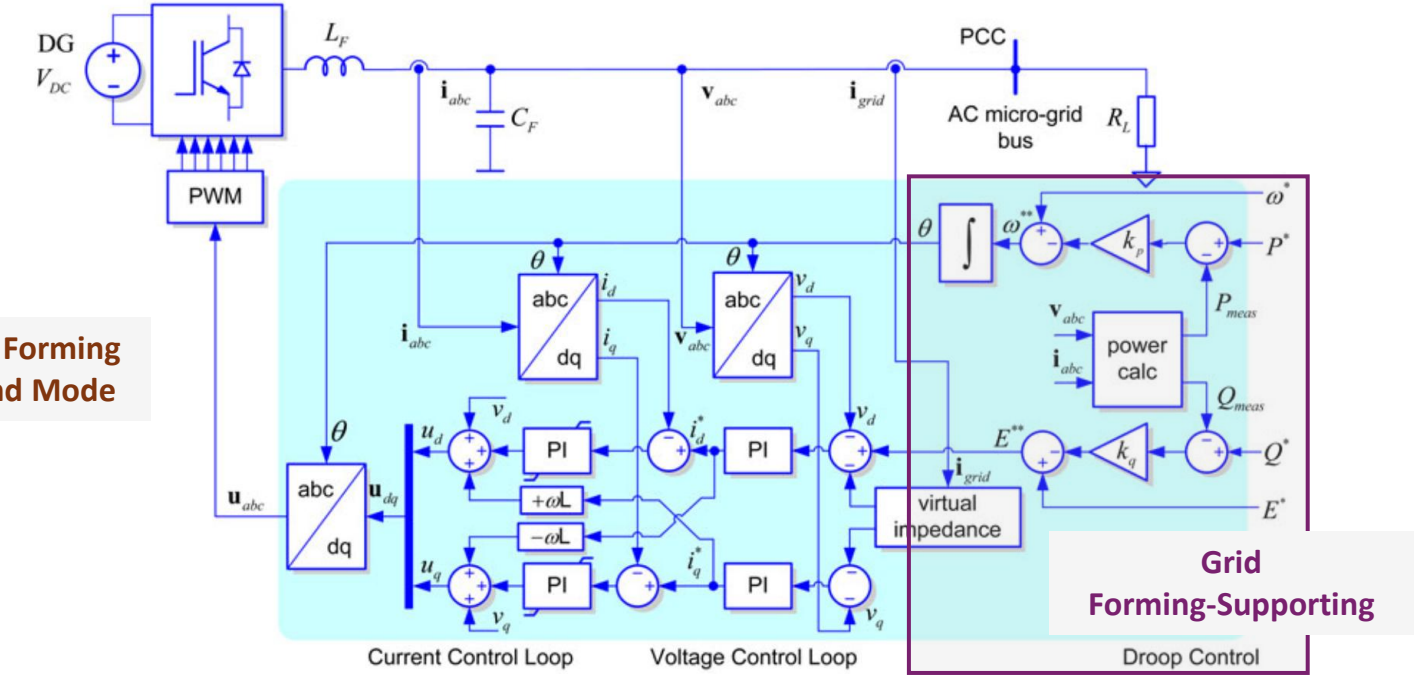

Figure 2.17. Basic control structure of Grid supporting power converter operating as a voltage source. [6]

Filter for Grid-Connected Converters

Why grid filters matter

- Reduce **switching ripple / EMI** at PCC and protect synchronizers from HF noise. [1,5,7]
- Avoid **control interaction**: resonance can couple with current loop & PLL/FLL; co-design bandwidths. [1,6,7,8]
- In general, three types of filters are implemented: L / LC / LCL

L filter: single inductor between inverter and grid.

- Pros: simple, robust; minimal resonance concerns.
- Cons: weaker HF attenuation → larger L, more voltage drop; slower dynamics.
- Use when: low power / relaxed EMI or as baseline topology.
- **Only for Grid Following Converters**

LC filter: series L with shunt C to ground/grid.

- Pros: better attenuation than L; moderate component sizes.
- Cons: introduces resonance, so needs passive or active damping.
- Use when: moderate attenuation required; controller can handle added pole/zero.

LCL filter: inverter-side L, grid-side L, shunt C in between.

- Pros: high attenuation with compact parts; industry standard in MV/LV VSCs.
- Cons: sharp resonant peak; requires damping branch or active damping.
- Use when: stringent EMI limits and tight footprint; plan damping and sampling carefully.

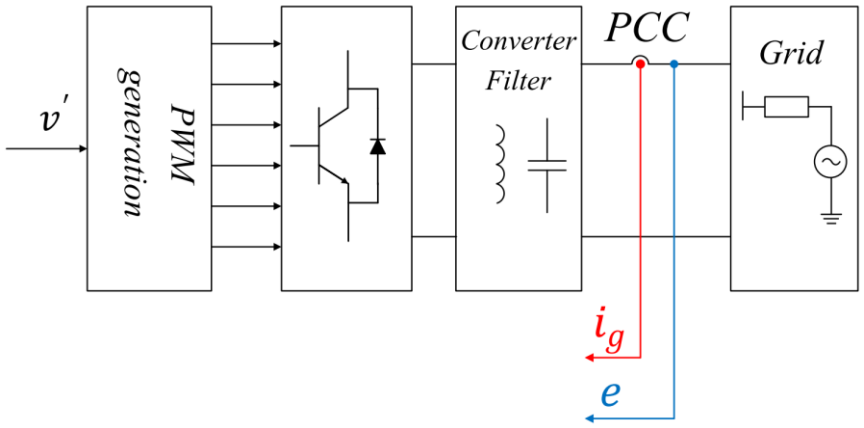

Figure 2.23. Simple grid-connected converter scheme. [7]

Presentation references

References

[1] F. Blaabjerg, R. Teodorescu, M. Liserre and A. V. Timbus, "Overview of Control and Grid Synchronization for Distributed Power Generation Systems," in IEEE Transactions on Industrial Electronics, vol. 53, no. 5, pp. 1398-1409, Oct. 2006, doi: 10.1109/TIE.2006.881997

[2] P. Rodriguez, J. Pou, J. Bergas, J. I. Candela, R. P. Burgos and D. Boroyevich, "Decoupled Double Synchronous Reference Frame PLL for Power Converters Control," in IEEE Transactions on Power Electronics, vol. 22, no. 2, pp. 584-592, March 2007, doi: 10.1109/TPEL.2006.890000

[3] L. Zhang, L. Harnefors and H. -P. Nee, "Power-Synchronization Control of Grid-Connected Voltage-Source Converters," in IEEE Transactions on Power Systems, vol. 25, no. 2, pp. 809-820, May 2010, doi: 10.1109/TPWRS.2009.2032231

[4] P. Rodríguez, A. Luna, I. Candela, R. Mujal, R. Teodorescu and F. Blaabjerg, "Multiresonant Frequency-Locked Loop for Grid Synchronization of Power Converters Under Distorted Grid Conditions," in IEEE Transactions on Industrial Electronics, vol. 58, no. 1, pp. 127-138, Jan. 2011, doi: 10.1109/TIE.2010.2042420

[5] M. Boyra and J. -L. Thomas, "A review on synchronization methods for grid-connected three-phase VSC under unbalanced and distorted conditions," Proceedings of the 2011 14th European Conference on Power Electronics and Applications, Birmingham, UK, 2011, pp. 1-10

[6] J. Rocabert, A. Luna, F. Blaabjerg and P. Rodríguez, "Control of Power Converters in AC Microgrids," in IEEE Transactions on Power Electronics, vol. 27, no. 11, pp. 4734-4749, Nov. 2012, doi: 10.1109/TPEL.2012.2199334.

[7] R. Rosso, X. Wang, M. Liserre, X. Lu and S. Engelken, "Grid-Forming Converters: Control Approaches, Grid-Synchronization, and Future Trends—A Review," in IEEE Open Journal of Industry Applications, vol. 2, pp. 93-109, 2021, doi: 10.1109/OJIA.2021.3074028

[8] S. Yan, L. Meegahapola, Y. Yang and F. Blaabjerg, "Grid-Supporting Renewable Energy Systems With Power Electronics Interfaces," in IEEE Open Journal of Power Electronics, vol. 6, pp. 1609-1640, 2025, doi: 10.1109/OJPEL.2025.3615123

…

References

[9] MathWorks, “Clarke Transform,” Motor Control Blockset Documentation. Available: https://www.mathworks.com/help/mcb/ref/clarketransform.html.

[10] MathWorks, “Clarke to Park Angle Transform,” Simscape Electrical / Mathematical Transforms Documentation. Available: https://la.mathworks.com/help/sps/ref/clarketoparkangletransform.html.

[11] MathWorks, “Symmetrical-Components Transform,” Simscape Electrical / Mathematical Transforms Documentation. Available: https://la.mathworks.com/help/sps/ref/symmetricalcomponentstransform.html

[12] A. Stampbach, “Grid synchronization methods,” imperix Technical Note TN107, Jun. 20, 2024. Available: https://imperix.com/doc/implementation/grid-synchronization-methods

[13] Imperix, “SOGI PLL,” Mar. 22, 2021. [Online]. Available: https://imperix.com/doc/implementation/sogi-pll

[14] Y. Yang, L. Hadjidemetriou, F. Blaabjerg and E. Kyriakides, "Benchmarking of phase locked loop based synchronization techniques for grid-connected inverter systems," 2015 9th International Conference on Power Electronics and ECCE Asia (ICPE-ECCE Asia), Seoul, Korea (South), 2015, pp. 2167-2174, doi: 10.1109/ICPE.2015.7168077.

[15] Imperix, “Synchronous Reference Frame (SRF) PLL,” Apr. 9, 2021. [Online]. Available: https://imperix.com/doc/implementation/synchronous-reference-frame-pll

[16] P. Rodríguez, R. Teodorescu, I. Candela, A. V. Timbus, M. Liserre and F. Blaabjerg, "New positive-sequence voltage detector for grid synchronization of power converters under faulty grid conditions," 2006 37th IEEE Power Electronics Specialists Conference, Jeju, Korea (South), 2006, pp. 1-7, doi: 10.1109/pesc.2006.1712059.

POWER & ENERGY CONVERSION LABORATORY

Department of Electrical Engineering
Pontificia Universidad Católica de Chile
peclab.ing.uc.cl