Control of Power Converters in AC Microgrids

Joan Rocabert, *Member, IEEE*, Alvaro Luna, *Member, IEEE*, Frede Blaabjerg, *Fellow, IEEE*, and Pedro Rodríguez, *Senior Member, IEEE*

(Invited Paper)

***Abstract*—The enabling of ac microgrids in distribution networks allows delivering distributed power and providing grid support services during regular operation of the grid, as well as powering isolated islands in case of faults and contingencies, thus increasing the performance and reliability of the electrical system. The high penetration of distributed generators, linked to the grid through highly controllable power processors based on power electronics, together with the incorporation of electrical energy storage systems, communication technologies, and controllable loads, opens new horizons to the effective expansion of microgrid applications integrated into electrical power systems. This paper carries out an overview about microgrid structures and control techniques at different hierarchical levels. At the power converter level, a detailed analysis of the main operation modes and control structures for power converters belonging to microgrids is carried out, focusing mainly on grid-forming, grid-feeding, and grid-supporting configurations. This analysis is extended as well toward the hierarchical control scheme of microgrids, which, based on the primary, secondary, and tertiary control layer division, is devoted to minimize the operation cost, coordinating support services, meanwhile maximizing the reliability and the controllability of microgrids. Finally, the main grid services that microgrids can offer to the main network, as well as the future trends in the development of their operation and control for the next future, are presented and discussed.**

***Index Terms*—Active and reactive power droop control, ancillary services, distributed energy resources, distributed generation (DG), grid converter control, grid synchronization, microgrids.**

I. Introduction

CENTRALIZED power generation, unidirectional power flow, passive electricity distribution, and demand-driven operation are concepts coined more than one century ago, when the first power systems were designed. In the last decades, modern solutions such as distributed generation (DG), mainly based on renewable energies, electrical energy storage (EES), flexible ac transmission systems, active demand management (ADM), microgrids, and smart control and management based on information and communication technologies (ICTs), have made it possible to plan new horizons for conventional power systems. However, not all the work for planning the future power systems is concluded yet, as an intensive research effort should be still conducted to make such advanced systems a reality today.

DG is a crucial issue for the development of modern power systems. However, technical constrains, mainly related to voltage stability and power flow limitations, raise questions about reliability of such a generation scheme as penetration of DG grows. This is partly due to the fact that such distributed generators had been classically considered as supplementary generation units, with low controllability from the transmission/distribution system operators (TSO/DSO), which results in predominantly passive and inflexible distribution networks, without the possibility of insolating given sections to work as microgrids when faults and contingencies occur in the main grid. Moreover, this lack of controllability does not allow an efficient exploitation of the DG capacity and makes necessary to maintain conventional power plants operational, working at their minimum operating point, as auxiliary reserves, thereby resulting in an overrated increase of the overall installed capacity as the penetration of DG grows. However, a high-level integration of DG systems can play in favor of a more efficient and flexible operation of the grid. The DG systems are normally connected at the distribution networks, thus closer to the end consumers if compared with large-scale power plants, something that permits reducing the overall transport losses. In addition, a proper control of DG plants, combined with the integration of EES, would permit providing a broad scope of ancillary services, as well as improving the continuity of supply, by enabling the creation of active islands, namely microgrids, supplied by local generation. Therefore, microgrids are foreseen to play an important role in the electrical grids of the future, mainly in low-voltage (LV) distribution networks, where the vast majority of DG systems are connected.

A microgrid is conceptually considered as a small-scale grid, formed by DG systems, EES devices, and loads that are electrically interconnected and hierarchically controlled, with the capability to operate either as a grid connected or as an intentionally islanded system [1], [2]. Among renewables, wind and photovoltaic (PV) power plants are specially suitable to be integrated as generators in microgrids, since they are smaller and more scalable than central power plants, meanwhile they can be potentially connected to any point of the power system [3]–[5]. Likewise, other nonrenewable-based power systems, such as diesel or gas fuelled generators, whose generation profile can be easily controlled, are also likely to be integrated into

Manuscript received December 8, 2011; revised March 11, 2012, April 23, 2012, and April 26, 2012; accepted May 7, 2012. Date of current version June 20, 2012. This work was supported in part by the Ministerio de Economía y Competitividad of Spain under Project ENE2011-29041-C02-01. Recommended for publication by Associate Editor L. Chang.

J. Rocabert and A. Luna are with the Department of Electrical Engineering, Technical University of Catalonia, 08222 Barcelona, Spain (e-mail: rocabert@ee.upc.edu; luna@ee.upc.edu).

F. Blaabjerg is with the Power Electronics Section, Green Power Laboratory, Institute of Energy Technology, Aalborg University, 9220 Aalborg, Denmark (e-mail: fbl@iet.aau.dk).

P. Rodríguez is with the Abengoa Research, 41014 Seville, Spain (e-mail: pedro.rodriguez@research.abengoa.com).

Color versions of one or more of the figures in this paper are available online at http://ieeexplore.ieee.org.

Digital Object Identifier 10.1109/TPEL.2012.2199334

0885-8993/$31.00 © 2012 IEEE
Authorized licensed use limited to: Pontificia Universidad Catolica de Chile. Downloaded on March 31,2026 at 16:48:07 UTC from IEEE Xplore. Restrictions apply.

microgrids. In addition to generators, the EES systems are claimed to be very important in microgrids as well, especially if renewable energy sources, which are characterized by having a stochastic and intermittent behavior [6], are the main energy sources in the microgrid.

At the present time, modern DG systems, which are one of the main actors in microgrids, present a higher controllability and operability degree than conventional generators. This feature will permit these systems to play a major and decisive role in maintaining the stability of the electrical networks in the future. This role has been already translated into changes in the grid codes that regulate the connection of DG to the grid. This is the case, for instance, of the regulations about the operation of DG under grid fault conditions. In the first DG units, the standards required their disconnection in the case of grid faults occurrence [7], [8]. However, this operation mode is no longer permitted in modern DG plants. For instance, in wind power systems, the low-voltage ride-through (LVRT) requirements demand wind power plants to remain connected to the grid and to provide specific grid support services during grid faults [9]. In some countries, these requirements have been also extended to PV systems [10].

As a difference with LVRT requirements, which are mandatory almost worldwide, in most of the countries, it is not currently allowed to form energized islands when the main electrical network experiences an outage, in order to avoid any risk in the maintenance operations as well as for protecting electrical systems against prospective damages. As a consequence of this requirement, and in spite of the obvious advantages that would provide the capability of feeding isolated parts of the grid, microgrids are forced to shut down during blackouts, thus interrupting the energy supply to consumers that could be in fact fed by local generators. However, the advances in the control of microgrids and DG systems, the integration of communication technologies in DG plants and loads, as well as the higher interaction between generation and demand, permits us to foresee that the intentional islanding will not be much longer a restriction, but a mandatory requirement, among others, in near future grid codes, [11], [12]. In this scenario, the implementation of hierarchical control schemes for microgrids enables us to perform a coordinated interaction with management and control operations of the main grid, whereby the interoperability of microgrids with the main grid is improved, as well as their effective integration.

In this framework, this paper carries out an overview about microgrids structures and control techniques, at different hierarchical levels, for the operation of grid-connected power converters forming ac microgrids. This work starts with a discussion about the classification of power converters according to their role in a microgrid. Their main operation features and the detailed control schemes in each case will be introduced and discussed. After that, and due to its high influence in the performance of a microgrid control, a short glance to the ac synchronization techniques used in this kind of applications will be given. Finally, the common low- and high-level control structures for the power converters forming a microgrid will be reviewed and the hierarchical control structure of the microgrid will be discussed in detail. This paper will end up with a presentation of the main grid services that microgrids can offer to the main network, as well as the future trends in the development of microgrids operation and control for the next future.

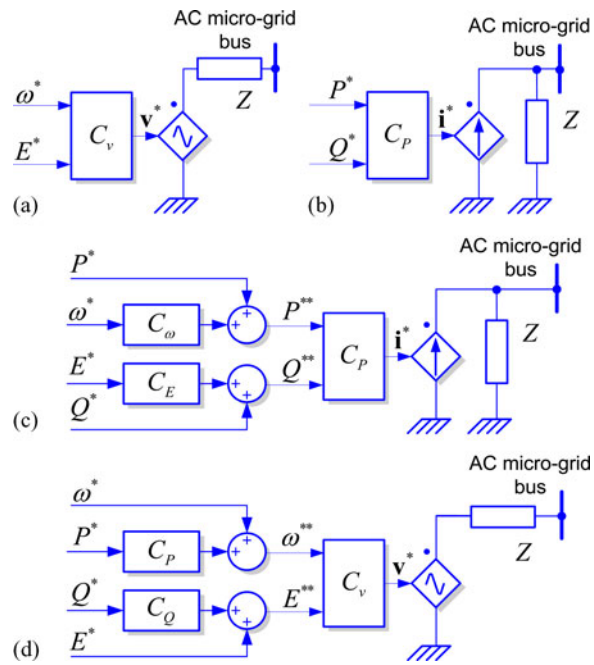

Fig. 1. Simplified representation of grid-connected power converters. (a) grid-forming, (b) grid-feeding, (c) current-source-based grid-supporting, and (d) voltage-source-based grid-supporting.

II. Classification of Power Converters in AC Microgrids

Depending on their operation in an ac microgrid, power converters can be classified into grid-feeding, grid-supporting, and grid-forming power converters [13], [14].

The grid-forming converters can be represented as an ideal ac voltage source with a low-output impedance, setting the voltage amplitude E^* and frequency ω^* of the local grid by using a proper control loop, as illustrated in Fig. 1(a).

On the other hand, the grid-feeding power converters are mainly designed to deliver power to an energized grid. They can be represented as an ideal current source connected to the grid in parallel with high impedance. The simplified scheme of the grid-feeding power converter is depicted in Fig. 1(b), where P^* and Q^* represent the active and the reactive powers to be delivered, respectively. In this application, it is important to outline that this current source should be perfectly synchronized with the ac voltage at the connection point, in order to regulate accurately the active and reactive power exchanged with the grid.

Finally, the grid-supporting converters can be represented either as an ideal ac-controlled current source in parallel with a shunt impedance, or as an ideal ac voltage source in series with a link impedance, as shown in Fig. 1(c) and (d), respectively. These converters regulate their output current/voltage to keep the value of the grid frequency and voltage amplitude close

Authorized licensed use limited to: Pontificia Universidad Catolica de Chile. Downloaded on March 31,2026 at 16:48:07 UTC from IEEE Xplore. Restrictions apply.

to their rated values. In case of controlling a grid-supporting converter as a voltage source, the effect of the link impedance is usually emulated by the internal control loop.

A grid-feeding power converter, controlled as a current source, needs a generator or a power converter to form the grid voltage in order to be able to operate. Therefore, this kind of converter cannot operate independently in island mode. On the contrary, a grid-forming power converter usually operates specifically in islanded mode, since in the main grid the ac voltage is conventionally formed by synchronous generators [2]. A grid-supporting power converter is in between a grid-feeding and a grid-forming power converter, being its main objective to deliver proper values of active and reactive power to contribute to the regulation of the grid frequency and the voltage. In case of implementing it as current source, as shown in Fig. 1(c), it needs at least one grid former to operate. However, if it is controlled as a voltage source with link impedance, as detailed in Fig. 1(d), it can operate in both grid-connected and island mode, as a synchronous generators does in a conventional grid.

A. Grid-Forming Power Converters

The grid-forming power converters are controlled in closed loop to work as ideal ac voltage sources with a given amplitude E^* and frequency ω^*. As voltage sources, they present a low-output impedance, so they need an extremely accurate synchronization system to operate in parallel with other grid-forming converters. Power sharing among grid-forming converters connected in parallel is a function of the value of their output impedances. A practical example of a grid-forming power converter can be a standby UPS. This system remains disconnected from the main grid when the operating conditions are within certain limits. In the case of a grid failure, the power converter of the UPS forms the grid voltage. In a microgrid, the ac voltage generated by the grid-forming power converter will be used as a reference for the rest of grid-feeding power converters connected to it.

Fig. 2 shows an example of a controller for a grid-forming power converter, which is implemented by using two cascaded synchronous controllers working on the *dq* reference frame. The inputs to the control system are the amplitude E^* and the frequency ω^* of the voltage to be formed by the power converter at the point of common coupling (PCC). The external loop controls the grid voltage to match its reference value, while the internal control loop regulates the current supplied by the converter. Therefore, the controlled current flowing though the inductor L_F charges the capacitor C_F to keep the output voltage close to the reference provided to the voltage control loop. Usually, in industrial applications, these power converters are fed by stable dc voltage sources driven by batteries, fuel cells, or another primary source.

B. Grid-Feeding Power Converter

Grid-feeding power converters are controlled as current sources, presenting high parallel output impedance. These power converters are suitable to operate in parallel with other grid-feeding power converters in grid-connected mode. Actually, most of the power converters belonging to DG systems operate in grid-feeding mode, like in PV or wind power systems [15]. These converters can participate in the control of the microgrid ac voltage amplitude and frequency by adjusting, at a higher level control layer, the references of active and reactive powers, P^* and Q^*, to be delivered [16], [17]. Grid-feeding power converters cannot operate in island mode if there is no grid-forming or grid-supporting power converter, or a local synchronous generator, setting the voltage amplitude and frequency of the ac microgrid. Fig. 3 shows a typical control structure for an ac grid-feeding power converter. The operation of the grid-feeding converters is often regulated by a high-level controller, like a maximum power point tracking (MPPT) controller or a power plant controller, which sets reference values for P^* and Q^*.

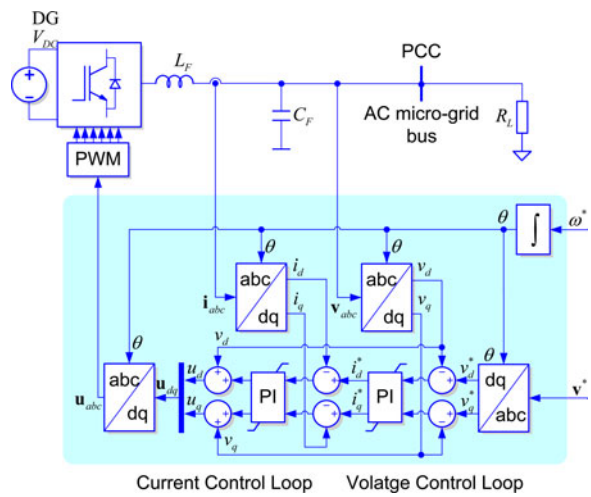

Fig. 2. Basic control structure in a three-phase grid-forming voltage source inverter generating a sinusoidal voltage determined by a nominal voltage amplitude v^* and reference frequency ω^*.

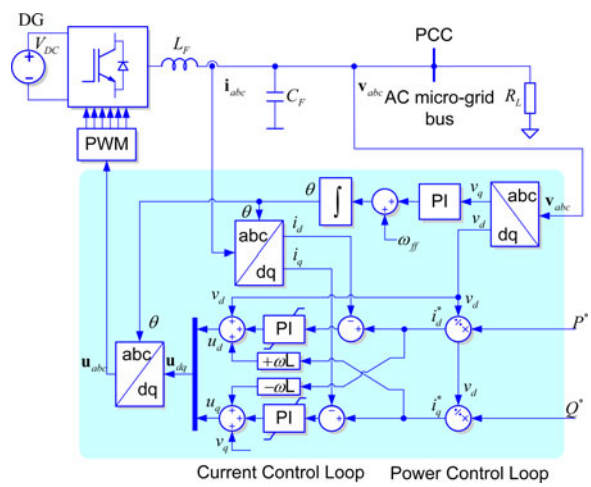

Fig. 3. Basic control structure in a three-phase grid-feeding power converter.

C. Grid-Supporting Power Converter

A grid-supporting power converter is controlled as a voltage source with a link impedance, as shown in Fig. 1(d), or

Authorized licensed use limited to: Pontificia Universidad Catolica de Chile. Downloaded on March 31,2026 at 16:48:07 UTC from IEEE Xplore. Restrictions apply.

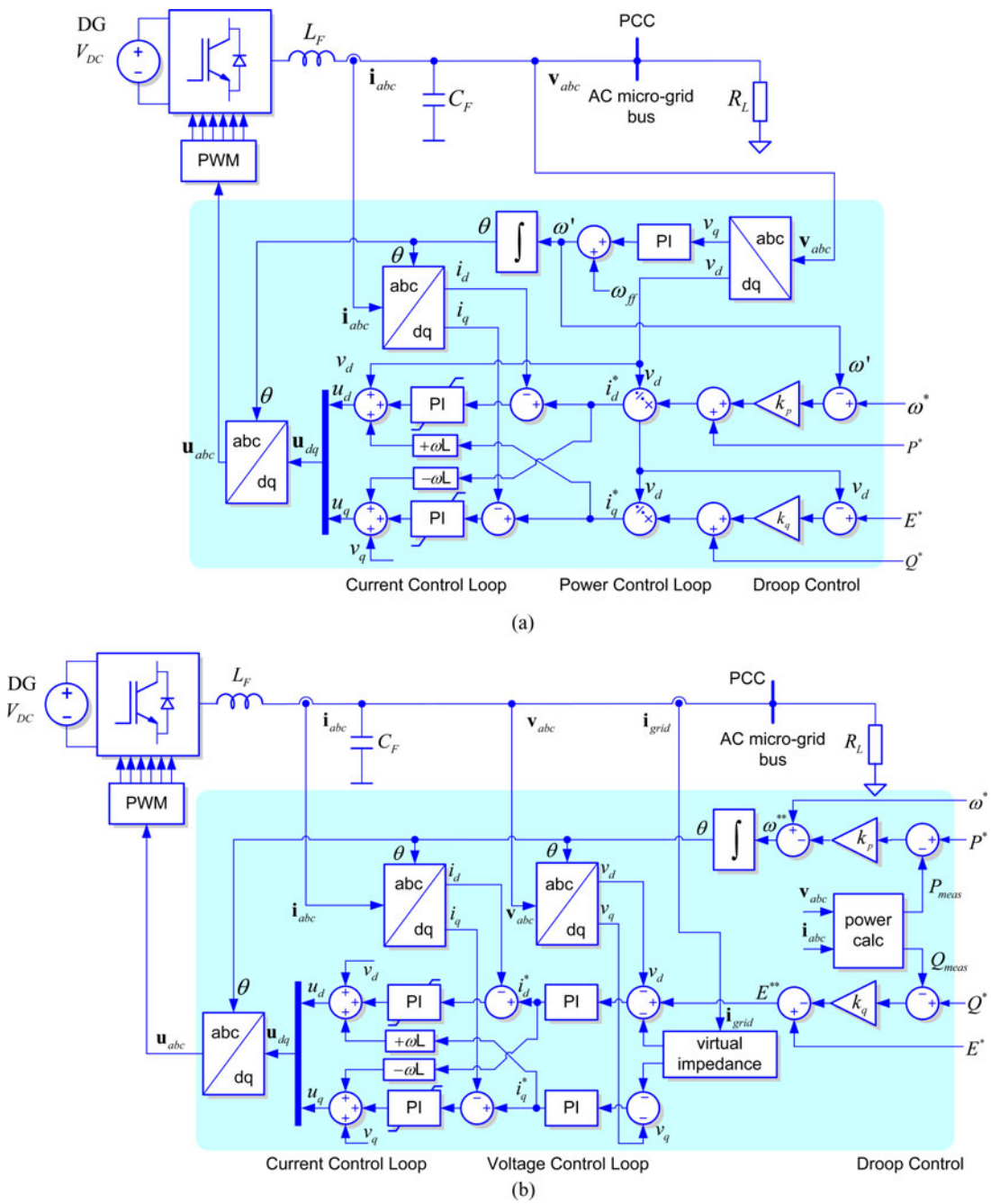

Fig. 4. Basic control structure of three-phase grid-supporting power converters. (a) Grid-supporting power converter operating as a current source. (b) Grid-supporting power converter operating as a voltage source.

alternatively, as a current source with a parallel impedance, as shown in Fig. 1(c). In any case, its main objective is to participate in the regulation of the ac grid voltage amplitude E^* and frequency ω^* by controlling the active and reactive power delivered to the grid [18].

Two main types of power converters can be found within the grid-supporting group.

1) The power converter is controlled as a current source, as in Fig. 4(a), in which the main objective is not only to supply the load connected to the microgrid, but it should additionally be adjusted to contribute to regulate the voltage amplitude and frequency of both the ac grid and the microgrid. For example, the grid codes regulating the grid connection of wind turbines [19] are defined so that they should be designed to provide a given amount of power to the grid for regulatory purposes. The effect of the delivered power on the regulation of the grid frequency and voltage amplitude is explained in detail in Section IV.
2) The power converter is controlled emulating the behavior of an ac voltage source, as shown in Fig. 4(b), which is

Authorized licensed use limited to: Pontificia Universidad Catolica de Chile. Downloaded on March 31,2026 at 16:48:07 UTC from IEEE Xplore. Restrictions apply.

connected to the grid through a link impedance, like in the simplified scheme of a synchronous generator [20]. In such a control scheme, the active and reactive power delivered by the power converter is a function of the ac grid voltage, the ac voltage of the emulated voltage source, and the link impedance, as explained in [21]. The link impedance in this power converter can be either a physical device connected between the VSI and the grid, or a virtual component, emulated within the current control loop. This kind of converters can participate in regulating the amplitude and the frequency of the grid voltage in both grid-connected and island modes, with no need of connecting any grid-forming converter in the microgrid. An example of grid-supporting power converters can be found in line-interactive UPS systems. Such power converters can operate in parallel in a microgrid, regulating power sharing without using any communication line, by implementing droop and virtual output impedance controllers, which dynamically modify their operating parameters according to the microgrid conditions [22].

III. Synchronization of Power Converters in AC Microgrids

The accuracy in the estimation of the ac grid voltage parameters has a strong influence in the overall performance of grid-connected power converters. A precise synchronization algorithm is needed to estimate the grid voltage parameters, i.e., voltage amplitude, frequency, and phase angle, as these values are needed for conducting an accurate control of the active and the reactive power delivered to the grid. In addition, a precise monitoring of the grid conditions is mandatory in order to determine the most suitable operation mode of the converters, as well as for supporting properly the connection and disconnection maneuvers. Due to the importance of the control of microgrids under generic grid conditions, the synchronization system should be able to ensure a proper behavior under unbalanced and distorted voltage conditions.

In the case of grid-forming power converters, the synchronization system should be able to work on both grid-connected and island modes. In the transition between these two operation modes, the synchronization unit should provide precise synchronization signals that allow the grid-forming power converter to establish a stable voltage in the microgrid. In the island mode, the synchronization system works as an oscillator at a fixed frequency ω^*. In the reconnection transient, the voltage generated by the grid-forming power converter should be resynchronized with the restored grid voltage. The synchronization system slowly varies the phase angle and frequency of the island's voltage to resynchronize with the grid voltage. All the grid-feeding power converters connected to such microgrid would be subjected to the reconnection frequency and phase-angle transients, so that this maneuver has to be made in a stable and secure way.

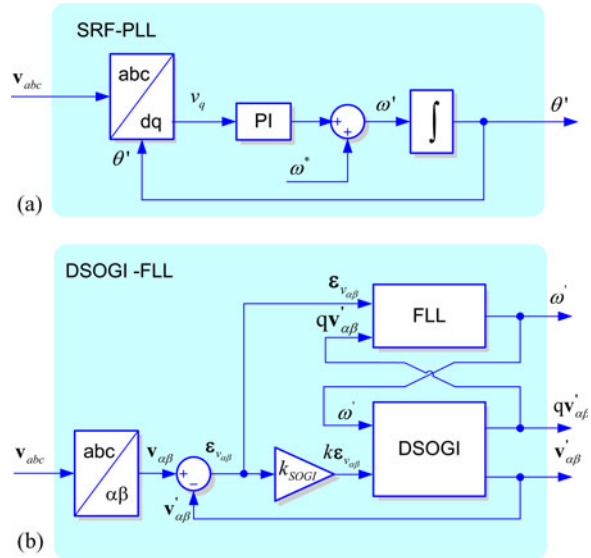

Fig. 5. (a) SRF-PLL and (b) DSOGI-FLL block diagrams.

A. Synchronous Reference Frame Phase-Locked Loop

The phase-locked loop technology has extensively been used to synchronize grid-connected power converters with the grid voltage. In three-phase systems, the synchronous reference frame phase-locked loop (SRF-PLL) has been broadly used for this purpose. The structure of the SRF-PLL is depicted in Fig. 5(a). The SRF-PLL translates the three-phase instantaneous voltage waveforms from the *abc* reference frame into the rotating *dq* reference frame, by means of the Park transformation. The angular position of this *dq* reference frame is controlled through a feedback control loop which drives the v_q component to zero. In this synchronization structure, the estimated grid frequency is ω'. As depicted in Fig. 5(a), the value of the rated frequency is normally included as a feed forward ω^* in order to improve the dynamics of the phase estimation θ', which is obtained by integrating ω' [23]–[26].

In spite of the good behavior of the SRF-PLL under balanced grid conditions, its performance is deteriorated when the three-phase input signal becomes unbalanced or distorted [27], [28]. To overcome this drawback, some advanced grid synchronization techniques have been proposed in the literature. This is for instance the case of the decoupled double-synchronous reference frame PLL, which is an enhanced PLL that stems from the same operation principle as the SRF-PLL, but improves its phase-angle and magnitude estimation under unbalanced conditions [29], [30].

B. Stationary Reference Frame Frequency-Locked Loop

As an alternative to PLL-based synchronization structures, other implementations based on a frequency-locked loop (FLL) can be used. Among different proposals, the synchronization structures based on the implementation of a second-order generalized integrator (SOGI) and an FLL to detect the grid voltage components, $\mathbf{v}'_{\alpha\beta}$ and $q\mathbf{v}'_{\alpha\beta}$, as well as the grid frequency ω' [31], as is presented in Fig. 5(b), have proven to be effective

Authorized licensed use limited to: Pontificia Universidad Catolica de Chile. Downloaded on March 31,2026 at 16:48:07 UTC from IEEE Xplore. Restrictions apply.

and accurate under generic conditions. The SOGI is implemented in both $\alpha\beta$ axis, giving rise to a dual-SOGI (DSOGI) structure, which is an adaptive bandpass filter that provides the filtered version of the input voltage vector $\mathbf{v}'_{\alpha\beta}$, as well as its quadrature component $q\mathbf{v}'_{\alpha\beta}$. The resonance frequency of the DSOGI is the grid frequency estimated by the FLL.

One of the main advantages of using an FLL lays on the fact that this structure is less sensitive than the PLL to phase-angle jumps that may occur in the grid voltage during transient grid faults, thus improving its performance under abnormal grid conditions [32]. This interesting feature of the FLL provides a fast dynamic response with low overshooting, thus allowing a fast and a smooth transition between the grid-connected and the islanded operating modes of the microgrid.

IV. Control Schemes of Power Converters in AC Microgrids

In a microgrid, different DG technologies, based on different primary resources (oil, gas, wind, sun, water, etc.) and with a broad variety of objectives and roles (grid-feeding, grid-forming, energy storage, etc.), may be interconnected. Therefore, microgrids require a set of structured controllers to ensure a proper system operation under generic operating conditions, such as different operation modes or grid-fault handling. In this section, the local controllers used in different types of power converters in a microgrid will be described.

Low-level voltage and current controllers are responsible of regulating locally the power converter output variables. These controllers should have a high bandwidth and performance in order to guarantee a fast time response under generic operating conditions. At a higher control level, primary controllers take care of the stability of the microgrid. These controllers manage the power sharing among the DGs in a microgrid by implementing droop controller equations and, optionally, emulating virtual impedances at the output of the power converters. Primary controllers do not require any communication among the power converters of the microgrid.

A. Grid-Feeding Power Converter

The inner controller of grid-feeding power converters lays on fast current control loops that regulate the current injected into the grid [33]. Another external controller sets the reference current to regulate the power delivered to the grid [34], [35]. This reference current is usually provided as a feed-forward signal calculated as a function of the reference powers, P^* and Q^* [36], [37].

The most broadly used solutions for implementing linear current controllers in three-phase systems are those based on regular PI controllers working on *dq* synchronous reference frames, or the ones based on the implementation of resonant controllers working on a $\alpha\beta$ stationary reference frame [33]. In addition to these proposals, others based on nonlinear control structures, such as those based on hysteresis, sliding, or predictive controllers, can be also used for tracking sinusoidal reference currents in a fast and robust way [37].

1) Current Control Based on the dq Synchronous Reference Frame: The implementation of current controllers based on the *dq* synchronous reference frame has been broadly used in the control of ac currents in three-phase systems. By means of the Park transformation, the sinusoidal currents under control can be represented as dc values in an orthogonal *dq* frame, rotating synchronously at the detected grid fundamental frequency. In this reference frame, two independent control loops are in charge of regulating the direct and quadrature current components. In the case of grid-feeding converters, the reference currents $[i_d^*, i_q^*]$ are usually provided by a power controller that regulates the active and reactive power delivered to the grid. The instantaneous active and reactive power components are calculated by

$$p = v_d i_d + v_q i_q; \quad q = v_d i_q - v_q i_d. \tag{1}$$

Fig. 3 shows the structure of a *dq*-based synchronous current control, including the grid voltage feed-forward and the decoupling network used to improve the performance of the controller [37]. However, in this standard structure, the PI controllers are unable to regulate the oscillations that appear in the *dq* signals under unbalanced grid conditions. In order to overcome this drawback, two *dq* synchronous controllers may be implemented in order to regulate independently both the positive- and the negative-sequence current components of the injected current [38]. Likewise, multiple reference frames, rotating at multiples of the fundamental frequency, should be implemented to properly control the harmonic currents injected into the ac grid.

2) Current Control Based on a Resonant Controller in a Stationary Reference Frame: This kind of controllers work with ac variables expressed on the $\alpha\beta$ stationary reference frame [39]. In this case, the PI controllers are replaced by proportional resonant (PR) controllers, whose resonance frequency is tuned at the fundamental grid frequency detected by the grid synchronization system [40], [41]. The transfer function of a PR controller can be written as

$$G_{\mathrm{PR}}^{\alpha\beta}(s) = k_P + \frac{k_R s}{s^2 + \omega_o^2} + \sum_{h=2}^{n} \frac{k_{ih} s}{s^2 + (h\omega_o)^2} \tag{2}$$

where k_P is the proportional gain, k_R is the resonant gain at the grid frequency, k_{ih} is the resonant gain at the h-harmonic to be controlled, and ω_o is the detected fundamental frequency [33]. Like in the case of *dq* synchronous controllers, the reference currents in the $\alpha\beta$ stationary reference frame are calculated by the power controller in charge of regulating the power exchanged with the grid. The instantaneous active and reactive power components in the $\alpha\beta$ stationary reference frame are calculated by

$$p = v_\alpha i_\alpha + v_\beta i_\beta, \quad q = v_\beta i_\alpha - v_\alpha i_\beta. \tag{3}$$

There is a significant advantage in the implementation of PR controllers in a stationary reference frame compared to the use of PI controllers working in a *dq* synchronous reference frame, when controlling unbalanced sinusoidal currents is intended. In such case, the applications based on PR controllers do not require the implementation of decoupling networks, neither independent sequence controls, as such controllers are able to control both positive and negative sequence components with a

Authorized licensed use limited to: Pontificia Universidad Catolica de Chile. Downloaded on March 31,2026 at 16:48:07 UTC from IEEE Xplore. Restrictions apply.

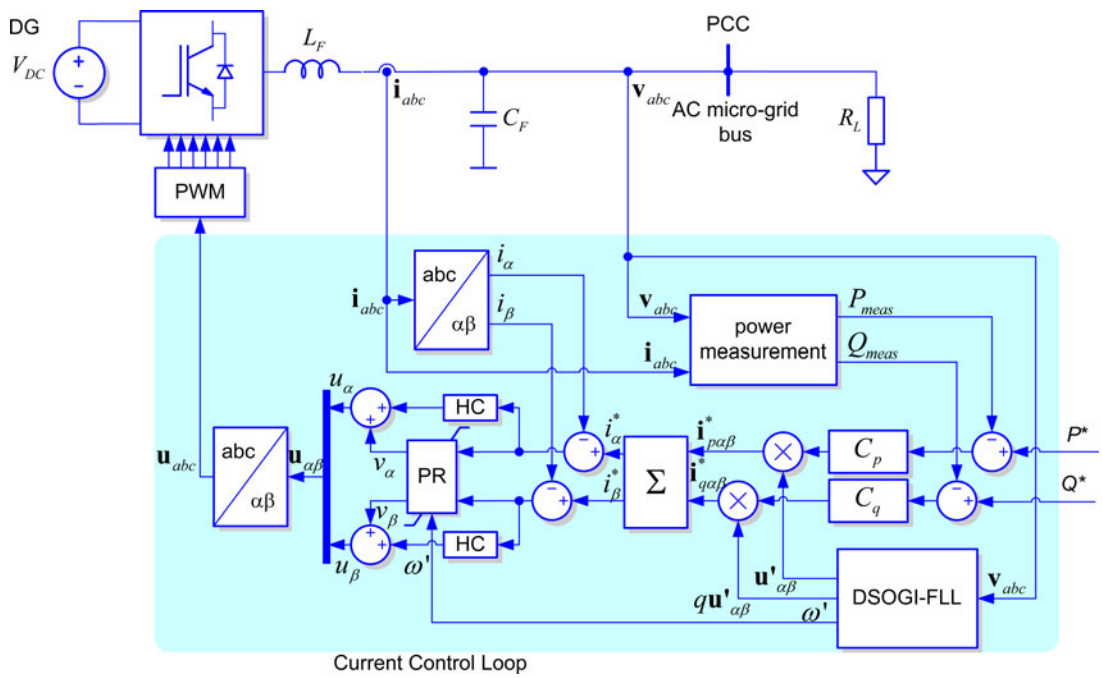

Fig. 6. Basic structure of the grid-feeding converter implemented in stationary reference frame control, with PR controller (PR) and HC.

single PR block. These features make the PR controllers a very convenient candidate to be applied to the regulation of the current injected by grid-feeding converters under generic grid conditions, even under grid faults. Moreover, additional harmonic compensators (HC), working in parallel, can be implemented straightforward, by means of tuning multiple PR controllers at the desired harmonic frequencies ($h{\cdot}\omega'$). The control structure of a grid-feeding converter using resonant controllers is shown in Fig. 6.

B. Grid-Forming Power Converter: Voltage and Current Control Loop

Grid-forming power converters are in charge of setting the voltage that will be supplied to loads, the main control structure of a grid-forming power converter consists of two cascaded loops, as depicted in Fig. 2. The external loop is in charge of regulating the output voltage. In this loop, the error between the reference and the measured voltage is the input to a controller whose output establishes the current reference i^* to be injected by the converter. It should be pointed out that the voltage control loop of the grid-forming power converter will be enabled only when the microgrid is disconnected from the main network and works in the island mode. On the other hand, the inner current loop regulates the current supplied by the power converter, tracking the reference current provided by the outer voltage loop.

The voltage quality in a microgrid voltage does not exclusively depend on the performance of the grid-forming converter, since the connection of loads and other DG sources to the microgrid distribution lines, usually weak LV lines, can modify substantially the voltage profile along the line. The presence of grid-supporting converters contributes positively to improve the voltage quality along the microgrid line, in both grid-connected and island modes.

The grid-forming power converters can be controlled in both the dq synchronous and the $\alpha\beta$ stationary reference frames [4], [42].

C. Grid-Supporting Power Converter: Active and Reactive Power Control Loop

Techniques for controlling power sharing in microgrids have previously been used in applications dealing with paralleled UPS. Different current sharing strategies have been proposed for small rated paralleled inverters, such as centralized controllers, master–slave, average-load sharing, or circular-chain controls [43]. However, these solutions are conceived for paralleling systems which are close to each other and interconnected through high-bandwidth communication channels used for control purposes. These communication-based solutions are not the most suitable choice for controlling microgrids, since distributed generators and loads in microgrids may be separated several kilometers. To overcome this problem, droop control algorithms are used to control the power sharing in microgrids without using communication channels, thereby eliminating the limits imposed by the physical location and improving the microgrid performance [44]. The droop regulation techniques are implemented in grid-supporting power converters to regulate the exchange of active and reactive powers with the grid, in order to keep the grid voltage frequency and amplitude under control. The main idea to support the droop control comes from mimic the self-regulation capability of the synchronous generator in grid-connection mode, decreasing the delivered active power

Authorized licensed use limited to: Pontificia Universidad Catolica de Chile. Downloaded on March 31,2026 at 16:48:07 UTC from IEEE Xplore. Restrictions apply.

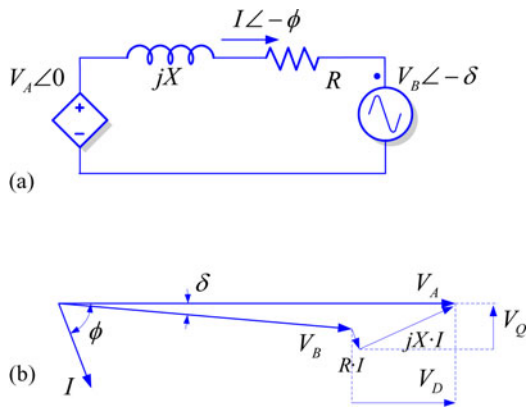

Fig. 7. Simplified modeling of power converter connection to a distribution network. (a) Equivalent circuit. (b) Phasor diagram.

TABLE I
TYPICAL LINE IMPEDANCES VALUES

Type of Line	R (Ω/km)	X (Ω/km)	R/X (p.u.)
Low Voltage Line	0.642	0.083	7.7
Medium Voltage Line	0.161	0.190	0.85
High Voltage Line	0.06	0.191	0.31

when the grid frequency increases and decreasing the injected reactive power when the grid voltage amplitude increases.

1) Grid Impedance Influence on Droop Control: Considering the power converter as an ideal controllable voltage source that is connected to the mains through a given line impedance, as shown in Fig. 7(a), the active and reactive powers that it will deliver to the grid can be written as:

$$P_A = \frac{V_A}{R^2 + X^2}\left[R\left(V_A - V_B\cos\delta\right) + XV_B\sin\delta\right] \quad (4)$$

$$Q_A = \frac{V_A}{R^2 + X^2}\left[-RV_B\sin\delta + X\left(V_A - V_B\cos\delta\right)\right]. \quad (5)$$

where P_A and Q_A are the active and reactive powers, respectively, flowing from the source A (power converter) to the B (grid), V_A and V_B are the voltage values of these sources, δ corresponds to the phase-angle difference between the two voltages, $Z = R + jX$ is the interconnection line impedance and θ is the impedance angle. As $R = Z{\cdot}\cos(\theta)$ and $X = Z{\cdot}\sin(\theta)$, the performance of this simplified electrical system can be depicted by its vector representation, as shown in Fig. 7(b) [45].

a) Inductive grid: The inductive component of the line impedances in HV and MV networks is typically much higher than the resistive one, as shown in Table I [46].

Therefore, the resistive part can be neglected without making any significant error. In addition, the power angle δ in such lines is small, so it can be assumed that $\sin(\delta) \approx \delta$ and $\cos(\delta) \approx 1$ [47]. Therefore, (4) and (5) can be rewritten as:

$$P_A \approx \frac{V_A}{X}\left(V_B\sin\delta\right) \Rightarrow \delta \approx \frac{XP_A}{V_AV_B} \quad (6)$$

$$Q_A \approx \frac{V_A}{X}\left(V_A - V_B\cos\delta\right) \Rightarrow V_A - V_B \approx \frac{XQ_A}{V_A}. \quad (7)$$

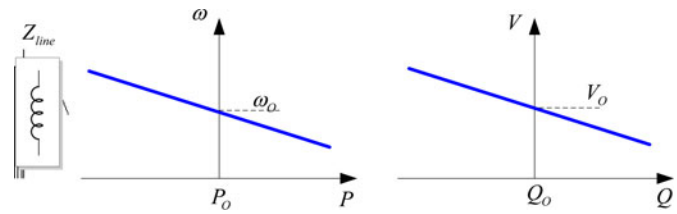

Fig. 8. Frequency and voltage droop characteristics in grids with dominant inductive behavior.

Expressions (6) and (7) show a direct relationship between the power angle δ and the active power P, as well as between the voltage difference $V_A - V_B$ and the reactive power Q. These relationships permit regulating the grid frequency and voltage at the point of connection of the power converter, by controlling the value of the active and reactive powers delivered to the grid. Therefore, the following droop control expressions can be written for inductive lines:

$$f - f_O = -k_p\left(P - P_O\right) \quad (8)$$

$$V - V_O = -k_q\left(Q - Q_O\right) \quad (9)$$

where $f - f_O$ and $V - V_O$ represent the grid frequency and the voltage deviations, respectively, from their rated values, and $P - P_O$ and $Q - Q_O$ are the variations in the active and reactive powers delivered by the power converter to compensate such deviations. These relationships can be graphically represented by the droop characteristics shown in Fig. 8, where, as stated in (8) and (9), the gain of the control action in each case, i.e., the slope of the frequency and voltage droop characteristic, is set by the k_P and k_Q parameters, respectively. Therefore, as depicted in Fig. 8, each of the grid-supporting power converters operating in a microgrid will adjust its active and reactive power reference according to its *P/f* and *Q/V* droop characteristic to participate in the regulation of the microgrid frequency and voltage, respectively.

b) Resistive grid: On the contrary to the case of HV networks, the grid impedance in LV networks is mainly resistive, as it is shown in Table I [46], and thus, the inductive part can be neglected. As a consequence, and maintaining the assumption that the power angle δ has a small value, (4) and (5) give rise to:

$$P_A \approx \frac{V_A}{R}\left(V_A - V_B\cos\delta\right) \Rightarrow V_A - V_B \approx \frac{RP_A}{V_A} \quad (10)$$

$$Q_A = -\frac{V_A \cdot V_B}{R}\sin\delta \Rightarrow \delta \approx -\frac{RQ_A}{V_AV_B}. \quad (11)$$

Therefore, the voltage amplitude in LV networks depends mainly on the active power flow, while their frequency is mainly affected by the reactive power injection. From (10) and (11), the following droop control expressions can be written for resistive lines:

$$V - V_O = -k_p\left(P - P_O\right) \quad (12)$$

$$f - f_O = k_q\left(Q - Q_O\right) \quad (13)$$

Authorized licensed use limited to: Pontificia Universidad Catolica de Chile. Downloaded on March 31,2026 at 16:48:07 UTC from IEEE Xplore. Restrictions apply.

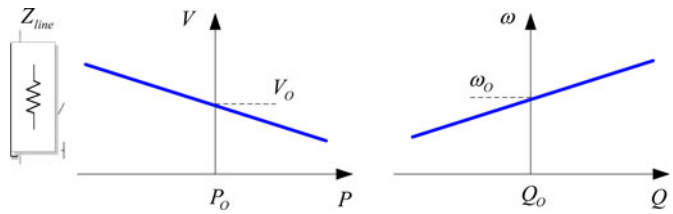

Fig. 9. Voltage and frequency droop characteristics in mainly resistive grids, generally in LV systems.

being their droop characteristics represented in Fig. 9 [48], [49], which depicts the *P/V* and the *Q/f* droop control actions to be taken in resistive networks for regulating the grid voltage and frequency.

c) General case: In the general case, the combined effect of the resistive and inductive line impedance components should be taken into account in the droop control equations [14]. To do that, a rotation matrix **T** is used to transform the active and reactive powers, *P* and *Q*, into the rotational power components, P' and Q', as detailed in the following:

$$\begin{bmatrix} P' \\ Q' \end{bmatrix} = [\mathbf{T}] \cdot \begin{bmatrix} P \\ Q \end{bmatrix} = \begin{bmatrix} \cos\phi & -\sin\phi \\ \sin\phi & \cos\phi \end{bmatrix} \cdot \begin{bmatrix} P \\ Q \end{bmatrix} = \begin{bmatrix} X/Z & -R/Z \\ R/Z & X/Z \end{bmatrix} \cdot \begin{bmatrix} P \\ Q \end{bmatrix} \tag{14}$$

where $\varphi = \pi/2 - \theta = \arctan(R/X)$, φ is the rotation angle of the matrix **T** and θ is the angle of the line impedance, $Z = Z \angle \theta$.

Provided that δ takes a small value, the application of the **T** rotation matrix to (4) and (5) results in the following simplified equations:

$$P'_A \approx \frac{V_A}{Z}(V_B \sin\delta) \Rightarrow \delta \approx \frac{ZP'_A}{V_A V_B} \tag{15}$$

$$Q'_A \approx \frac{V_A}{X}(V_A - V_B \cos\delta) \Rightarrow V_A - V_B \approx \frac{ZQ'_A}{V_A} \tag{16}$$

where P'_A and Q'_A are the rotated components of P_A and Q_A according to (10).

From (15) and (16), it can be concluded that the power angle δ can be controlled by regulating the rotating active power P'_A, while the voltage difference $V_A - V_B$ can be changed by regulating the rotating reactive power Q'_A. Therefore, in a general case, the droop control equations can be written as:

$$\begin{aligned} f - f_0 &= -k_p(P' - P'_0) \\ &= -k_p \frac{X}{Z}(P - P_0) + k_q \frac{R}{Z}(Q - Q_0) \end{aligned} \tag{17}$$

$$\begin{aligned} V - V_0 &= -k_q(Q' - Q'_0) \\ &= -k_p \frac{R}{Z}(P - P_0) - k_q \frac{X}{Z}(Q - Q_0). \end{aligned} \tag{18}$$

According to (17) and (18), the contribution in the compensation of the frequency and the voltage amplitude variations by each grid-supporting power converter in a microgrid can be adjusted by changing the values k_p and k_q.

D. Virtual Impedance Control

Conventional *P/f* and *Q/V* droop controls have been proven to be an effective solution for regulating the voltage magnitude and frequency in MV networks, where the lines have a predominant inductive behavior. However, as shown previously, the performance of this kind of controls is highly dependent on the *R/X* ratio of the line [50]. Due to this feature, this method cannot be directly applied in all kind of networks, unless sophisticated grid impedance estimation algorithms are implemented in order to calculate the rotated powers indicated in (14). This issue is even more important when the droop control is applied to LV microgrids, as stated in [44], [49], and [51]. In such a case, a small mismatching in the grid impedance estimation results in an inefficient power sharing among the droop controlled distributed generators.

As an intuitive solution to solve these drawbacks, resulting from the strong dependence of the conventional droop controller performance on the line impedance value, large inductors could be used to link the power converter to the ac bus and thereby the line impedance would be predominantly inductive. However, this is not an efficient solution since, in addition to the increase in the size and the costs, the dc-bus voltage level should be significantly increased to compensate the high voltage drop across these inductors, thus reducing the overall efficiency. A more effective solution consists on introducing virtually the effect of this link impedance, adapting the control loop of the power converter in order to include its effect.

This concept was successfully implemented in [52] and [53] where an adjustable virtual output impedance was used for regulating the power sharing among parallelized inverters and limiting overcurrents under grid disturbances [54]. It is worth to remark that the value of the virtual impedance should be larger than the actual line impedance; otherwise, it will not have a predominant effect in the power flow equations.

The virtual impedance modifies the power converter output voltage reference as indicated in (19), where the modified voltage reference $\mathbf{v}_{\mathrm{ref}}$ is obtained by subtracting the virtual voltage drop across the virtual impedance $Z_V \cdot \boldsymbol{i}_{\mathrm{grid}}$ from the reference value originally provided by the droop equations, $\mathbf{v}^*_{\mathrm{ref}}$ [43].

$$\boldsymbol{v}_{\mathrm{ref}} = \boldsymbol{v}^*_{\mathrm{ref}} - Z_V \cdot \boldsymbol{i}_{\mathrm{grid}}. \tag{19}$$

The value of Z_V sets the dynamic of the controller; hence, it must be considered as a control variable and should be selected according to the nominal power of the converter. An example of the implementation of the virtual impedance concept in a grid-connected power converter is shown in Fig. 10.

V. Hierarchical Control of AC Microgrids

In a microgrid, where different power generation systems based on different technologies and power ratings are interconnected, it is necessary to implement a hierarchical control structure oriented to minimize the operation cost, while maximizing efficiency, reliability, and controllability.

Authorized licensed use limited to: Pontificia Universidad Catolica de Chile. Downloaded on March 31,2026 at 16:48:07 UTC from IEEE Xplore. Restrictions apply.

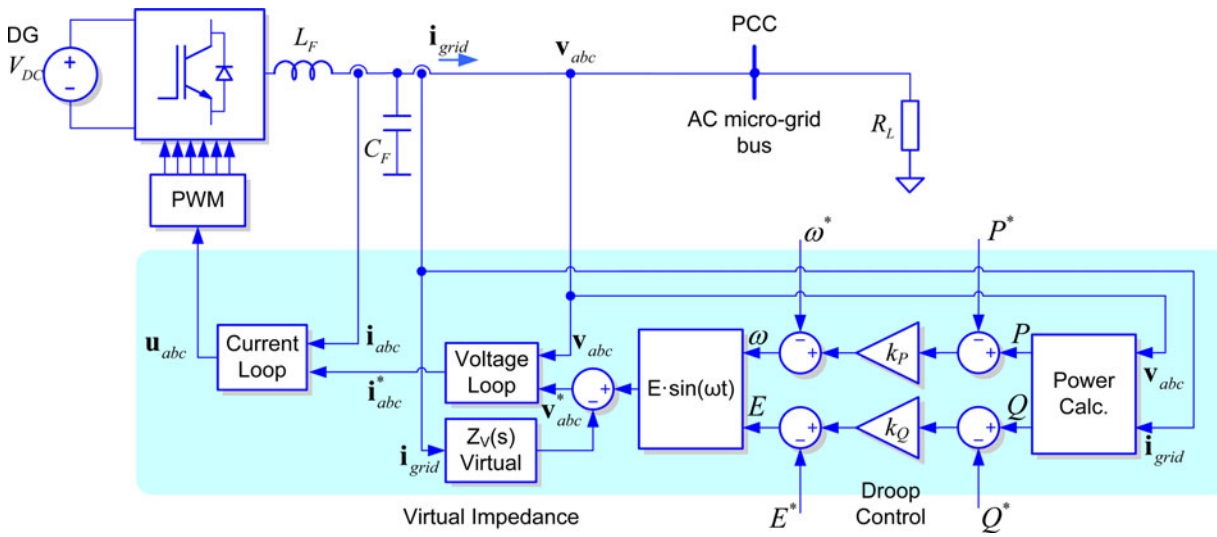

Fig. 10. Block diagram of the virtual output impedance loop working with P and Q droop method in the grid power converter.

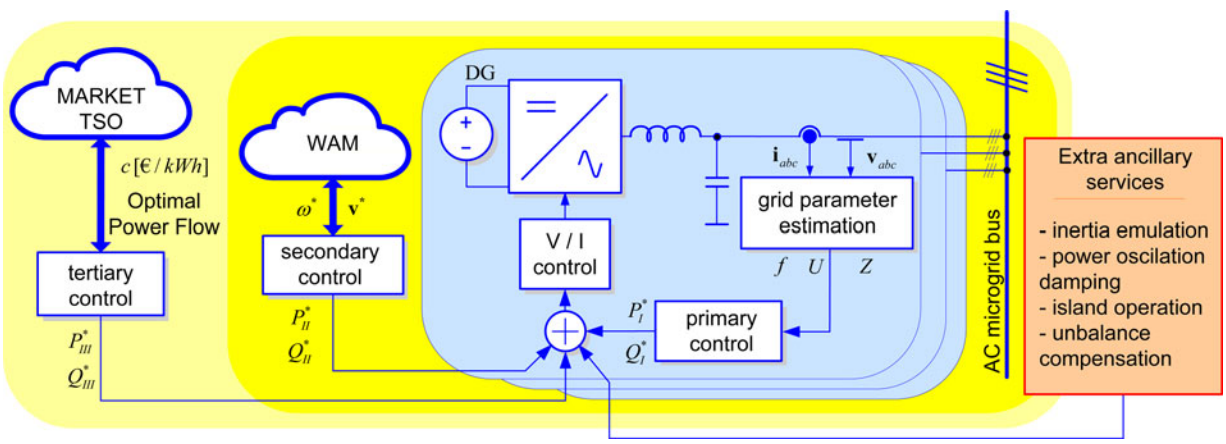

Fig. 11. Block diagram of primary, secondary, and tertiary microgrid control.

Power ratings, distribution of loads and generation systems, electrical market prices, generation costs, and energy availability from stochastic primary sources are the main issues to be considered when determining the optimum operation point of a microgrid [51]–[55]. Therefore, to guarantee a proper regulation of the operation set point, the hierarchical control of microgrids can be organized into three main layers, i.e., primary, secondary, and tertiary control, as presented in Fig. 11. Some extra ancillary services, many of them implemented locally in the generation units, have been included in Fig. 11 as well. The objective of these services is discussed in Section VI.

The primary control, the so-called local control, is devoted to control local variables, such as frequency and voltage, as well as current injection. In addition to other low-level controls, these local controllers deal with implementing droop and virtual impedance control techniques in each of the distributed power converters connected to the microgrid.

The secondary control works as a centralized automatic generation controller and compensates the steady-state errors in the microgrid voltage and frequency, restoring their values to the nominal ones. In addition, the secondary control is responsible for controlling the voltage profile along the ac buses in order to keep it within its operational limits at any point of the microgrid structure. The secondary control makes use of communications and wide-area monitoring systems to coordinate the action of all the generation units within a given area, being its time response in the range of minutes, thus having a slow dynamic if compared with the primary control.

Finally, the tertiary control level is responsible for optimizing the microgrid operation and setting its interaction with the distribution network by controlling the active and reactive power references for each DG unit. This optimization is usually based on economic criteria, which considers the relationship between the demand and the energy supply balance, together with the marginal generation cost of each DG unit. The estimation in the short-term load changes, the generation forecast, and energy storage capability, as well as the specific demands set by the TSO/DSO and the prize signals provided by the electrical

Authorized licensed use limited to: Pontificia Universidad Catolica de Chile. Downloaded on March 31,2026 at 16:48:07 UTC from IEEE Xplore. Restrictions apply.

market, are taken into account in the microgrid operation analysis [56]. The tertiary control level is also in charge of restoring the secondary control reserve, managing eventual congestions, and giving support to the secondary control if necessary.

The secondary and tertiary control levels are coordinately used in grid-feeding and in grid-supporting inverters to control the microgrid operation point. In the grid-connected mode, the DG units supply a specified power, usually set by such high-level control layers. On the other hand, when the microgrid works in stand-alone mode, the main duty for DG sources is to keep the voltage and frequency value within operational limits, also during disconnection and reconnection transients [57], [58]. Therefore, grid-forming inverters will be in charge of locally controlling the voltage and frequency of the ac waveforms provided to the microgrid in stand-alone mode [59], [60] and grid-supporting inverters will contribute to guarantee a proper voltage profile along the microgrid extension.

A. Grid-Feeding Power Converters

The local control of grid-feeding power converters can set the active and reactive power references to maximize the energy yield according to a given MPPT algorithm [61], either in grid-connected or stand-alone conditions. However, grid-feeding converters can also deliver given active and reactive power levels, P_I^* and Q_I^*, set as references by the secondary control. In such a case, the secondary control layer sets the operation point of each inverter, as a function of its capacity and prime mover technology, with the objective of minimizing the voltage and the frequency deviations. In island operation, the secondary controller acts on the grid-feeding DG inverters establishing a set of power references, P_{II}^* and Q_{II}^*, that intends to properly share the power generation in the microgrid.

The tertiary control level of grid-feeding power converters sets the optimal operation of the system from an economical point of view, taking into account different criteria, such as: prime mover generation cost, prime mover availability, cost of purchasing energy, and profit objectives.

B. Grid-Supporting Power Converters

In grid-supporting power converters, the primary control loop, combined with the virtual impedance technique, sets the amplitude, frequency, and phase angle of the reference voltage in the inner control loops, as it has been discussed in the previous sections. This $\mathbf{v}^*$ is constantly updated according to the difference between the actual and the nominal values of the voltage and the frequency at the point of connection. This primary control level allows multiple grid-supporting power converters to work together with the aim of maintaining the voltage and the frequency stability in the microgrid. The secondary control level in the grid-supporting converters adjusts the droop characteristic coefficients, k_P and k_Q in (17) and (18), to restore the microgrid voltage and the frequency to their target values by changing P_I^* and Q_I^* references.

The frequency deviations will be the same for all the elements belonging to the microgrid. However, different voltage deviations will occur as a function of the grid impedance values and connected sources. These voltage and frequency deviations are translated into changes in P_I^* and Q_I^* references for each inverter through the primary droop control action. The objective of the primary control in this case is to balance the power injected into the microgrid by each DG unit. Under any voltage or frequency deviation, a secondary control action is applied to multiple DG units in the microgrid to restore their nominal values. If compared with conventional generators, the secondary control in modern grid-supporting power converters is able to provide a faster response; however, these control actions are limited by some factors such as the battery capacity or the primary renewable resource availability.

The tertiary control, acts over the secondary control level with the objective to restore the secondary control reserve, as well as to set the microgrid voltage and frequency to their nominal values in case the secondary reserve, is not effective enough.

C. Grid-Forming Power Converter

When a microgrid works in the island operation mode, its grid-forming power converters set the microgrid nominal voltage and frequency by adjusting their internal voltages and virtual impedances. Thus, the secondary control, or the microgrid central controller, will only act in the transition between the island and the grid-connected operation modes. Under such operating conditions, the microgrid voltage and frequency reference values, E^* and ω^*, will experience small and slow variations, δE and $\delta\omega$, to resynchronize in phase angle, frequency, and amplitude with the main network voltage before reconnecting.

VI. Grid Services Provided by Microgrids

The distributed generators forming a microgrid can be controlled in a coordinated way to provide some ancillary services oriented to enhance the performance of the main network [62]. According to the IEEE Standard 1547.2-2008 [63], among the ancillary services that distributed power generation systems may offer to the electrical power systems, generation scheduling optimization, enhanced system control and dispatch services, reactive power supply and voltage and frequency control regulation, black-start restoration, energy imbalance compensation, and spinning reserve operation can be highlighted as the most representatives. Moreover, these services can be further extended if EES systems are integrated in the microgrid. In such a case, functionalities like the extension of the operational reserve capability, frequency regulation, peak shaving, backup of intentional electrical islands, and optimized management of daily wind/solar cycles [64], [65] might be implemented as well.

Among the services offered by microgrids, the capability for safely operating in island mode is of special interest, as it increases the operability of the electrical network while improves the continuity of the electricity supply into the local network in case of contingencies. Nevertheless, this operation mode is not yet permitted by the majority of TSO/DSO. The prospective risk in the repair operations of lines that can be partially powered, the liability for damage of end-user equipment in case of deviations of the grid frequency and voltage respect to their rated values and difficulties for reclosing the electrical circuit onto an

Authorized licensed use limited to: Pontificia Universidad Catolica de Chile. Downloaded on March 31,2026 at 16:48:07 UTC from IEEE Xplore. Restrictions apply.

unsynchronized active island are some of the main reasons why TSO/DSO are concerned about islanding operation. Nevertheless, it is foreseen that mandatory disconnection and shutting down of active islands in the electrical grid will be gradually relaxed, as the control techniques for the management of DG systems, in both operation modes, are continuously improving [66]–[68]. Recent Standards, IEEE 1547.4 [12], work to give a guideline for microgrids with stand-alone capability to guarantee the safe connection and disconnection from the grid.

The capability for providing ancillary services by a microgrid depends mainly on the capability of its grid-connected power converters to accurately control the active and reactive power flow in the system, in a coordinated manner, under generic operating conditions [69].

Microgrid power converters can competently participate in regulating the grid voltage profile, mainly in LV grids, by means of controlling the active and reactive power delivery through droop control algorithms [47], [60], [70]. This regulation capability can be further improved if ES systems are also integrated in the microgrid, as the control capability becomes less dependent on the availability of the primary energy resource. In addition, the microgrid hierarchical control permits to carry out a distributed control of the voltage in different points of the microgrid according to the load and generation conditions, and the grid layout and *X/R* characteristics [69]. The high-level control of a microgrid should be coordinated within the secondary and tertiary control schemes of the TSO/DSO, which allows optimizing power flow sharing among all the DG facilities forming the grid.

In addition to the grid voltage and the frequency regulation, new grid-supporting power converters in a microgrid should be able to contribute to damp power oscillations, either in grid-connected or island mode [10], [71]. Power oscillations deteriorate power quality in a microgrid and can even give rise to serious problems regarding the stability of the system. The occurrence of active power oscillations in microgrids are not only due to the inherent intermittent nature of the primary renewable energy sources used in distributed generators, but they are also produced as a consequence of the characteristic electromechanical response of conventional synchronous generators when a sudden load variation happens [72]. The coordinated control of the power converters forming a microgrid allows optimizing the attenuation of the power oscillations generated by distributed generators and setting the most effective power damping strategy according to the grid layout and operating conditions. It should be outlined here that the installation of EES systems in microgrids benefits the damping of active power oscillations.

Modern microgrids can provide backup and black-start services, being this the last procedure for recovering from total or partial shutdown of electrical supplies in a network area [69]. The grid-forming and grid-supporting power converters in microgrids can provide backup and black-start functionalities since they present the capability of setting active islands in the electrical network during contingencies. Energizing and synchronization of electrical areas from these active islands after a blackout can be performed by coordinating the operational control layers of the microgrids and the TSO/DSO centralized controllers, in order to properly restore the grid by connecting generation units and loads. In the microgrid restoration and grid connection, the synchronization should be accurate enough in order to avoid hazardous voltage and frequency excursions. The microgrid blackout restoration procedure is analyzed in [73], where it is discussed how the coordinated action of multimicrogrids improve the global performance in two main steps: building the grid by synchronizing small islands and integrating generation and loads. This restoration process from a black-start can be enhanced by integrating EES systems into microgrids.

Finally, it is worth to point out that microgrids can offer other coordinated services related to power quality improvement, in both grid-connected and island modes. Harmonics and unbalance compensation, flicker reduction, transient voltage support during grid-faults, or reactive power compensation are actually common functionalities in modern DG systems [69]. The hierarchical control of microgrids allows sharing power quality conditioning functionalities among the elements of the microgrid in such a way that an optimal use of the microgrid power conversion capacity for attenuating disturbances can be achieved.

VII. Trends in the Control of Microgrids

Advances in the control of microgrids have improved their potential to be integrated into the conventional electrical systems, not only improving their connection and disconnection procedures in the aim of limiting negative effects in the network in its neighborhood, but also providing grid support functionalities oriented to enhance the global operation of the network under generic conditions. Even though microgrids are not extensively exploited nowadays, being its installation mostly restricted to demonstrative projects, these control advances should positively contribute to increase its participation in electrical networks boosting thus its presence and competitiveness in future electrical markets [10].

Regarding the current development of microgrids and its future role in the new electrical networks, the route map of the new developments in microgrids can be grouped into three main areas, which are closely linked to each other: 1) grid integration of EES systems in microgrids and power generation facilities, 2) active management of the demand, and 3) improvement of the microgrid controllability and monitoring.

The integration of EES technologies is a key issue in the development of the future smart electrical networks [74], as the capability for storing energy permits the development of control strategies that shall permit solving many of the drawbacks that nowadays hinder the high-scale integration of DG systems. As a straightforward application, the integration of EES systems would permit damping the power variations in the generation facilities whose energy resource is stochastic, like in PV and wind power plants. The implementation of EES is providing promising results already in WT applications [75], [76] and PV [77], where such systems enhance the peak power response as well as firming energy production. Likewise, EES systems will also be used to smooth the load profile [78], offering load-leveling and load-tracking functionalities. The load-leveling service is used to smooth the load profile, while the load-tracking services

Authorized licensed use limited to: Pontificia Universidad Catolica de Chile. Downloaded on March 31,2026 at 16:48:07 UTC from IEEE Xplore. Restrictions apply.

regulate power in response to the frequency variations originated by load fluctuations.

It is important to point out that the participation of EES in microgrids should not only take into account generation facilities, but also some external systems which are not linked directly to the generation technologies, but whose role can be decisive in the next future. This is the case of the vast amounts of EES which are foreseen to be present in the future electrical grids in the form of millions of electric vehicles (EV) [79]. In such grids, the EV are not understood as passive loads but also as active elements being able to support grid services and guarantee supply continuity [79], [80], and thereby the vehicle-to-grid concept being stated.

The second area where relevant contributions are expected to arise in the next future is related to the active management of demand and supply, i.e., the active coordination of distributed consumers and generators to optimize the energy use and power flows [81]. The ADM is based on regulating the user electricity consumption in response to the power system operating conditions. The demand response should help us to compensate fluctuations in the electrical power generated from renewable energies and uses economic incentives to increase the participation from consumers.

One of the tools used in the ADM is the load shedding, whose objective is to reduce the voltage amplitude and frequency excursions in the presence of severe grid disturbances. The load-shedding capability is a reserve itself, which allows the frequency to return to its rated value in a fast mode.

Finally, the third area, which is focused on improving the microgrid controllability and monitoring, collects all trends related with the integration of ICTs in the microgrid management to optimize the capability for predicting its performance, increasing the information flow and improving its controllability. As an example, one of these improvements deals with the incorporation of the probability of availability concept for limiting risks in smart grids dispatching [81].

ICT is essential to improve the demand response and prediction, to apply generation predictability and almost in all the new functionalities to be implemented in microgrids. Advanced two-way communication systems and smart meters improve the ability of electricity suppliers and consumers facilitate the adoption of optimal decisions about how and when energy should be produced and consumed. The efficient monitoring, management, and control of all the units composing distributed power systems and microgrids require ICT as enabling technologies. Intelligent measurement systems (smart meters and communications) and diagnosis can reduce the power reserve, maintaining a low uncertainty level in a microgrid power generation scheme.

VIII. Conclusion

This paper has conducted an overview of different aspects related to the control of ac microgrids. The control techniques of the power converters forming the microgrid have been presented according to the power converter role, thereby the low-level control loops for grid-feeding, grid-forming, and grid-supporting have been described for both grid-connected and islanded operation modes. The droop control schemes for inductive, resistive, and generic lines have been presented as an effective solution to support the amplitude and frequency of the voltage in ac microgrids. Likewise, the virtual impedance concept has been introduced and its suitability to control power sharing in paralleled power converters has been pointed out.

The hierarchical control structure on microgrids has been presented as well and the functionality of each layer has been discussed, being highlighted the importance of high-level control layers for optimizing efficiency and performances, meanwhile generation costs are reduced. The grid services provided by microgrids have been reviewed as well and their requirements on the control scheme layers have been pointed out. By the same token, it has been stressed that the integration of decentralized EES systems facilitates the energy balance in the microgrids, improves the grid stability, and improves the performance of active electrical islands. Finally, new trends in the control of microgrids have been reviewed, highlighting the importance of the role that ICT will play in the grid integration and active management of future microgrids.

References

[1] G. Pepermans, J. Driesen, D. Haeseldonckx, R. Belmans, and W. D'haeseleer, "Distributed generation: Definition, benefits and issues," *Energy Policy*, vol. 33, no. 6, pp. 787–798, 2005.

[2] T. C. Green and M. Prodanovic, "Control of inverter-based micro-grids," *Electr. Power Syst. Res. Distrib. Generation*, vol. 77, no. 9, pp. 1204–1213, 2007.

[3] B. Kroposki, R. Lasseter, T. Ise, S. Morozumi, S. Papatlianassiou, and N. Hatziargyriou, "Making microgrids work," *IEEE Power Energy Mag.*, vol. 6, no. 3, pp. 40–53, May/Jun. 2008.

[4] F. Katiraei, R. Iravani, N. Hatziargyriou, and A. Dimeas, "Microgrids management," *IEEE Power Energy Mag.*, vol. 6, no. 3, pp. 54–65, May/Jun. 2008.

[5] F. Katiraei and M. R. Iravani, "Power management strategies for a microgrid with multiple distributed generation units," *IEEE Trans. Power Syst.*, vol. 21, no. 4, pp. 1821–1831, Nov. 2006.

[6] J. Arai, K. Iba, T. Funabashi, Y. Nakanishi, K. Koyanagi, and R. Yokoyama, "Power electronics and its applications to renewable energy in Japan," *IEEE Circuits Syst. Mag.*, vol. 8, no. 3, pp. 52–66, Third Quarter 2008.

[7] Z. Ye, A. Kolwalkar, Y. Zhang, P. Du, and R. Walling, "Evaluation of anti-islanding schemes based on nondetection zone concept," *IEEE Trans. Power Electron.*, vol. 19, no. 5, pp. 1171–1176, Sep. 2004.

[8] M. Liserre, A. Pigazo, A. Dell'Aquila, and V. M. Moreno, "An anti-islanding method for single-phase inverters based on a grid voltage sensorless control," *IEEE Trans. Ind. Electron.*, vol. 53, no. 5, pp. 1418–1426, Oct. 2006.

[9] J. Matevosyan, C. Jauch, T. Ackermann, and S. M. Bolik, "International comparison of requirements for connection of wind turbines to power systems," *Wind Energy Journal*, vol. 8, no. 3, pp. 295–306, 2005.

[10] (2008). *Offprint from the O. P. 12.2 outline. Technical requirements for wind power and photovoltaic installations and any generating facilities whose technology does not consist on a synchronous generator directly connected to the grid.* [Online]. Available: www.aeeolica.es.

[11] *IEEE Standard Conformance Test Procedures for Equipment Interconnecting Distributed Resources With Electric Power Systems,* IEEE Std 1547.1-2005, 2005.

[12] *IEEE Guide for Design, Operation, and Integration of Distributed Resource Island Systems with Electric Power Systems,* IEEE Standard 1547.4-2011, 2011.

[13] A. Engler, "Control of inverters in isolated and in grid tied operation with regard to expandability in tutorial: Power Electronics for Regenerative Energy," presented at the Proc. IEEE Power Electron. Spec. Conf., Aachen, Germany, 2004.

Authorized licensed use limited to: Pontificia Universidad Catolica de Chile. Downloaded on March 31,2026 at 16:48:07 UTC from IEEE Xplore. Restrictions apply.

[14] K. De Brabandere, B. Bolsens, J. Van den Keybus, A. Woyte, J. Driesen, and R. Belmans, "A voltage and frequency droop control method for parallel inverters," *IEEE Trans. Power Electron.*, vol. 22, no. 4, pp. 1107–1115, Jul. 2007.

[15] J. T. Bialasiewicz, "Renewable energy systems with photovoltaic power generators: Operation and modeling," *IEEE Trans. Ind. Electron.*, vol. 55, no. 7, pp. 2752–2758, Jul. 2008.

[16] H. H. Zeineldin, "A Q-f droop curve for facilitating islanding detection of inverter-based distributed generation," *IEEE Trans. Power Electron.*, vol. 24, no. 3, pp. 665–673, Mar. 2009.

[17] H. H. Zeineldin, E. F. El-Saadany, and M. M. A. Salama, "Distributed generation micro-grid operation: Control and protection," in *Proc. Power Syst. Conf.: Adv. Metering, Protection, Control, Commun., Distrib. Res.*, 2006, pp. 105–111.

[18] J. C. Vasquez, J. M. Guerrero, A. Luna, P. Rodriguez, and R. Teodorescu, "Adaptive droop control applied to voltage-source inverters operating in grid-connected and islanded modes," *IEEE Trans. Ind. Electron.*, vol. 56, no. 10, pp. 4088–4096, Oct. 2009.

[19] N. R. Ullah, T. Thiringer, and D. Karlsson, "Voltage and transient stability support by wind farms complying with the E.ON netz grid code," *IEEE Trans. Power Syst.*, vol. 22, no. 4, pp. 1647–1656, Nov. 2007.

[20] J. Driesen and K. Visscher, "Virtual synchronous generators," in *Proc. IEEE Power Energy Soc. General Meet. Convers. Delivery Electr. Energy 21st Century*, 2008, pp. 1–3.

[21] P. Kundur, *Power System Stability and Control*. Emeryville, CA: McGraw-Hill, 1993.

[22] J. M. Guerrero, J. C. Vasquez, J. Matas, M. Castilla, and L. G. de Vicuna, "Control strategy for flexible microgrid based on parallel line-interactive UPS systems," *IEEE Trans. Ind. Electron.*, vol. 56, no. 3, pp. 726–736, Mar. 2009.

[23] P. Rodriguez, A. Luna, R. Teodorescu, F. Iov, and F. Blaabjerg, "Fault ride-through capability implementation in wind turbine converters using a decoupled double synchronous reference frame PLL," in *Proc. Eur. Conf. Power Electron. Appl.*, 2007, pp. 1–10.

[24] V. Kaura and V. Blasko, "Operation of a phase locked loop system under distorted utility conditions," *IEEE Trans. Ind. Appl.*, vol. 33, no. 1, pp. 58–63, Jan./Feb. 1997.

[25] S.-K. Chung, "A phase tracking system for three phase utility interface inverters," *IEEE Trans. Power Electron.*, vol. 15, no. 3, pp. 431–438, May 2000.

[26] A. Timbus, R. Teodorescu, F. Blaabjerg, and M. Liserre, "Synchronization methods for three phase distributed power generation systems. An overview and evaluation," in *Proc. IEEE 36th Power Electron. Spec. Conf.*, 2005, pp. 2474–2481.

[27] R. M. Santos Filho, P. F. Seixas, P. C. Cortizo, L. A. B. Torres, and A. F. Souza, "Comparison of three single-phase PLL algorithms for UPS applications," *IEEE Trans. Ind. Electron.*, vol. 55, no. 8, pp. 2923–2932, Aug. 2008.

[28] S. Shinnaka, "A robust single-phase PLL system with stable and fast tracking," *IEEE Trans. Ind. Appl.*, vol. 44, no. 2, pp. 624–633, Mar./Apr. 2008.

[29] P. Rodriguez, J. Pou, J. Bergas, J. I. Candela, R. P. Burgos, and D. Boroyevich, "Decoupled double synchronous reference frame PLL for power converters control," *IEEE Trans. Power Electron.*, vol. 22, no. 2, pp. 584–592, Mar. 2007.

[30] S. Cobreces, E. J. Bueno, D. Pizarro, F. J. Rodriguez, and F. Huerta, "Grid impedance monitoring system for distributed power generation electronic interfaces," *IEEE Trans. Instrum. Meas.*, vol. 58, no. 9, pp. 3112–3121, Sep. 2009.

[31] P. Rodriguez, A. Luna, M. Ciobotaru, R. Teodorescu, and F. Blaabjerg, "Advanced Grid synchronization system for power converters under unbalanced and distorted operating conditions," in *Proc. IEEE 32nd Annu. Conf. Ind. Electron.*, 2006, pp. 5173–5178.

[32] P. Rodriguez, A. Luna, I. Candela, R. Rosas, R. Teodorescu, and F. Blaabjerg, "Multi-resonant frequency-locked loop for grid synchronization of power converters under distorted grid conditions," *IEEE Trans. Ind. Electron.*, vol. 58, no. 1, pp. 127–138, Jan. 2011.

[33] F. Blaabjerg, R. Teodorescu, M. Liserre, and A. V. Timbus, "Overview of control and grid synchronization for distributed power generation systems," *IEEE Trans. Ind. Electron.*, vol. 53, no. 5, pp. 1398–1409, Oct. 2006.

[34] M. C. Chandorkar, D. M. Divan, and R. Adapa, "Control of parallel connected inverters in standalone AC supply systems," *IEEE Trans. Ind. Appl.*, vol. 29, no. 1, pp. 136–143, Jan./Feb. 1993.

[35] N. Pogaku, M. Prodanovic, and T. C. Green, "Modeling, analysis and testing of autonomous operation of an inverter-based microgrid," *IEEE Trans. Power Electron.*, vol. 22, no. 2, pp. 613–625, Mar. 2007.

[36] P. Rodriguez, A. Timbus, R. Teodorescu, M. Liserre, and F. Blaabjerg, "Reactive power control for improving wind turbine system behavior under grid faults," *IEEE Trans. Power Electron.*, vol. 24, no. 7, pp. 1798–1801, Jul. 2009.

[37] A. Timbus, M. Liserre, R. Teodorescu, P. Rodriguez, and F. Blaabjerg, "Evaluation of current controllers for distributed power generation systems," *IEEE Trans. Power Electron.*, vol. 24, no. 3, pp. 654–664, Mar. 2009.

[38] M. Liserre, R. Teodorescu, and F. Blaabjerg, "Multiple harmonics control for three-phase grid converter systems with the use of PI-RES current controller in a rotating frame," *IEEE Trans. Power Electron.*, vol. 21, no. 3, pp. 836–841, May 2006.

[39] E. Clarke, *Circuit Analysis of AC Power Systems*. vol. 1. New York: Wiley, 1950.

[40] R. Cardenas, C. Juri, R. Peña, P. Wheeler, and J. Clare, "The application of resonant controllers to four-leg matrix converters feeding unbalanced or nonlinear loads," *IEEE Trans. Power Electron.*, vol. 27, no. 3, pp. 1120–1129, Mar. 2012.

[41] A. M. Roslan, K. H. Ahmed, S. J. Finney, and B. W. Williams, "Improved instantaneous average current-sharing control scheme for parallel-connected inverter considering line impedance impact in microgrid networks," *IEEE Trans. Power Electron.*, vol. 26, no. 3, pp. 702–716, Mar. 2011.

[42] R. Teodorescu and F. Blaabjerg, "Flexible control of small wind turbines with grid failure detection operating in stand-alone and grid-connected mode," *IEEE Trans. Power Electron.*, vol. 19, no. 5, pp. 1323–1332, Sep. 2004.

[43] J. M. Guerrero, L. Hang, and J. Uceda, "Control of distributed uninterruptible power supply systems," *IEEE Trans. Ind. Electron.*, vol. 55, no. 8, pp. 2845–2859, Aug. 2008.

[44] J. M. Guerrero, J. Matas, L. G. de Vicuna, M. Castilla, and J. Miret, "Wireless-control strategy for parallel operation of distributed-generation inverters," *IEEE Trans. Ind. Electron.*, vol. 53, no. 5, pp. 1461–1470, Oct. 2006.

[45] K. D. Brabandere, "Voltage and frequency droop control in low voltage grids by distributed generatros with inverter front-end", Ph.D. dissertation, Dept. Elektrotechniek, Katholieke Univ. Lueven, Leuven, België, 2006.

[46] A. Engler, "Applicability of droops in low voltage grids," *Int. J. Distrib. Energy Resources*, vol. 1, no. 1, Technology and Science Publisher, Germany, Kassel, 2005.

[47] H. Laaksonen, P. Saari, and R. Komulainen, "Voltage and frequency control of inverter based weak LV network microgrid," in *Proc. Int. Conf. Future Power Syst.*, 2005, pp. 1–6.

[48] S. Tabatabaee, H. R. Karshenas, A. Bakhshai, and P. Jain, "Investigation of droop characteristics and X/R ratio on small-signal stability of autonomous microgrid," in *Proc. 2nd Power Electron., Drive Syst. Technol. Conf.*, 2011, pp. 223–228.

[49] J. M. Guerrero, L. GarciadeVicuna, J. Matas, M. Castilla, and J. Miret, "Output impedance design of parallel-connected UPS inverters with wireless load-sharing control," *IEEE Trans. Ind. Electron.*, vol. 52, no. 4, pp. 1126–1135, Aug. 2005.

[50] W. Yao, M. Chen, J. Matas, M. Guerrero, and Z. Qian, "Design and analysis of the droop control method for parallel inverters considering the impact of the complex impedance on the power sharing," *IEEE Trans. Ind. Electron.*, vol. 58, no. 2, pp. 576–588, Feb. 2011.

[51] F. Z. Peng, Y. W. Li, and L. M. Tolbert, "Control and protection of power electronics interfaced distributed generation systems in a customer-driven microgrid," in *Proc. IEEE Power Energy Soc. General Meet.*, 2009, pp. 1–8.

[52] S. J. Chiang, C. Y. Yen, and K. T. Chang, "A multimodule parallelable series-connected PWM voltage regulator," *IEEE Trans. Ind. Electron.*, vol. 48, no. 3, pp. 506–516, Jun. 2001.

[53] Y. Xiaoxiao, A. M. Khambadkone, W. Huanhuan, and S. Terence, "Control of parallel-connected power converters for low-voltage microgrid—Part I: A hybrid control architecture," *IEEE Trans. Power Electron.*, vol. 25, no. 12, pp. 2962–2970, Dec. 2010.

[54] D. M. Vilathgamuwa, L. Poh Chiang, and Y. Li, "Protection of microgrids during utility voltage sags," *IEEE Trans. Ind. Electron.*, vol. 53, no. 5, pp. 1427–1436, Oct. 2006.

[55] S. Chowdhury, S. P. Chowdhury, and P. Crossley, *Microgrids and Active Distribution Networks. vol. 1*. London, U.K.: Inst. Eng. Technol., 2009.

[56] K. De Brabandere, K. Vanthournout, J. Driesen, G. Deconinck, and R. Belmans, "Control of microgrids," in *Proc. IEEE Power Eng. Soc. General Meet.*, 2007, pp. 1–7.

Authorized licensed use limited to: Pontificia Universidad Catolica de Chile. Downloaded on March 31,2026 at 16:48:07 UTC from IEEE Xplore. Restrictions apply.

[57] D. N. Gaonkar, G. N. Pillai, and R. N. Patel, "Seamless transfer of microturbine generation system operation between grid-connected and islanding modes," *Electr. Power Compon. Syst.*, vol. 37, no. 2, pp. 174–188, 2009.
[58] C. K. Sao and P. W. Lehn, "Intentional islanded operation of converter fed microgrids," in *Proc. IEEE Power Eng. Soc. General Meet.*, 2006, pp. 1–6.
[59] Technical Paper: Definition of a set of requirements to generating units, Union for the Coordination of Transmission of Electricity, Brussels, Belgium, 2008.
[60] J. M. Guerrero, J. C. Vasquez, J. Matas, L. G. de Vicuna, and M. Castilla, "Hierarchical control of droop-controlled AC and DC microgrids: A general approach toward standardization," *IEEE Trans. Ind. Electron.*, vol. 58, no. 1, pp. 158–172, Jan. 2011.
[61] A. K. Abdelsalam, A. M. Massoud, S. Ahmed, and P. N. Enjeti, "High-performance adaptive perturb and observe MPPT technique for photovoltaic-based microgrids," *IEEE Trans. Power Electron.*, vol. 26, no. 4, pp. 1010–1021, Apr. 2011.
[62] T. Kapetanovic, B. M. Buchholz, B. Buchholz, and V. Buehner, "Provision of ancillary services by dispersed generation and demand side response: Needs, barriers and solutions," *Elektrotechnik und Informationstechnik*, vol. 125, no. 12, pp. 452–459, 2008.
[63] *IEEE Application Guide for IEEE Std 1547, IEEE Standard for Interconnecting Distributed Resources with Electric Power Systems,* IEEE Std 1547.2-2008, 2008.
[64] R. M. Dell and D. A. J. Rand, "Energy storage: A key technology for global energy sustainability," *J. Power Sources*, vol. 100, no. 1/2, pp. 2–17, 2001.
[65] H. Jiayi, J. Chuanwen, and X. Rong, "A review on distributed energy resources and microgrid," *Renewable Sustainable Energy Rev.*, vol. 12, no. 9, pp. 2472–2483, 2008.
[66] H. J. Laaksonen, "Protection principles for future microgrids," *IEEE Trans. Power Electron.*, vol. 25, no. 12, pp. 2910–2918, Dec. 2010.
[67] J. Rocabert, G. M. S. Azevedo, A. Luna, J. M. Guerrero, J. I. Candela, and P. Rodríguez, "Intelligent connection agent for three-phase grid-connected microgrids," *IEEE Trans. Power Electron.*, vol. 26, no. 10, pp. 2993–3005, Oct. 2011.
[68] C. Changhee, J. Jin-Hong, K. Jong-Yul, K. Soonman, P. Kyongyop, and K. Sungshin, "Active synchronizing control of a microgrid," *IEEE Trans. Power Electron.*, vol. 26, no. 12, pp. 3707–3719, Dec. 2011.
[69] M. Braun A. Notholt-Vergara. (2008). *Advanced architectures and control concepts for more microgrids - inverter performance with regard to ancillary services and fault-ride-through capabilities* [Online]. Available at http://www.microgrids.eu
[70] Y. A. R. I. Mohamed, H. H. Zeineldin, M. M. A. Salama, and R. R. Seethapathy, "Seamless formation and robust control of distributed generation microgrids via direct voltage control and optimized dynamic power sharing," *IEEE Trans. Power Electron.*, vol. 27, no. 3, pp. 1283–1294, Mar. 2012.
[71] W. Fei, J. L. Duarte, and M. A. M. Hendrix, "Grid-interfacing converter systems with enhanced voltage quality for microgrid application: Concept and implementation," *IEEE Trans. Power Electron.*, vol. 26, no. 12, pp. 3501–3513, Dec. 2011.
[72] P. Mercier, R. Cherkaoui, and A. Oudalov, "Optimizing a battery energy storage system for frequency control application in an isolated power system," *IEEE Trans. Power Syst.*, vol. 24, no. 3, pp. 1469–1477, Aug. 2009.
[73] F. O. Resende, N. J. Gil, and J. A. P. Lopes, "Service restoration on distribution systems using Multi-MicroGrids," *Eur. Trans. Electr. Power*, vol. 21, no. 2, pp. 1327–1342, 2011.
[74] B. Roberts, "Capturing grid power," *IEEE Power Energy Mag.*, vol. 7, no. 4, pp. 32–41, Jul./Aug. 2009.
[75] A. Esmaili and A. Nasiri, "Energy storage for short-term and long-term wind energy support," in *Proc. 36th Annu. Conf. IEEE Ind. Electron. Soc.*, 2010, pp. 3281–3286.
[76] R. Sebastian and R. Pena, "Simulation of a high penetration wind Diesel system with a Ni-Cd battery Energy Storage," in *Proc. 35th Annu. Conf. IEEE Ind. Electron.*, 2009, pp. 4589–4594.
[77] M. Bragard, N. Soltau, S. Thomas, and R. W. De Doncker, "The balance of renewable sources and user demands in grids: Power electronics for modular battery energy storage systems," *IEEE Trans. Power Electron.*, vol. 25, no. 12, pp. 3049–3056, Dec. 2010.
[78] Ilic, x, M. D., J. Jhi-Young, X. Le, M. Prica, and N. Rotering, "A decision-making framework and simulator for sustainable electric energy systems," *IEEE Trans. Sustainable Energy*, vol. 2, no. 1, pp. 37–49, Jan. 2011.
[79] I. Cvetkovic, T. Thacker, D. Dong, G. Francis, V. Podosinov, D. Boroyevich, F. Wang, R. Burgos, G. Skutt, and J. Lesko, "Future home uninterruptible renewable energy system with vehicle-to-grid technology," in *Proc. IEEE Energy Convers. Congr. Expo.*, 2009, pp. 2675–2681.
[80] D. Boroyevich, I. Cvetkovic, D. Dong, R. Burgos, W. Fei, and F. Lee, "Future electronic power distribution systems a contemplative view," in *12th Int. Conf. Optim. Electr. Electron. Equip.*, 2010, pp. 1369–1380.
[81] P. P. Varaiya, F. F. Wu, and J. W. Bialek, "Smart operation of smart grid: Risk-limiting dispatch," *Proc. IEEE*, vol. 99, no. 1, pp. 40–57, Jan. 2011.

Joan Rocabert (S'08–M'11) was born in Barcelona, Spain. He received the M.Sc. degree in electrical engineering from the Technical University of Catalonia, Barcelona, in 2003, where he also received the Ph.D. degree in electrical engineering in 2010, on the topic of PV microgrids control.

From 2004 to 2008, he was a Research Assistant in the Department of Electronic Engineering, Technical University of Catalonia, where he has been a Researcher and Assistant Professor since 2008. His current research interests include power electronics applied to photovoltaic and wind energy systems, particularly their application into microgrids.

Alvaro Luna (S'07–M'10) received the B.Sc., M.Sc., and Ph.D. degrees from the Technical University of Catalonia (UPC), Barcelona, Spain, in 2001, 2005, and 2009, respectively, all in electrical engineering.

He joined the UPC as a Faculty Member in 2005, where he is currently an Assistant Professor. His research interests include wind turbines control, integration of distributed generation, and power conditioning.

Dr. Luna is a Student Member of the IEEE Power Electronics Society, the IEEE Industrial Electronics Society, and the IEEE Industrial Applications Society.

Authorized licensed use limited to: Pontificia Universidad Catolica de Chile. Downloaded on March 31,2026 at 16:48:07 UTC from IEEE Xplore. Restrictions apply.

Frede Blaabjerg (S'86–M'88–SM'97–F'03) received the Ph.D. degree from the Institute of Energy Technology, Aalborg University, Aalborg, Denmark, in 1995.

He was with ABB-Scandia, Randers, Denmark, during 1987–1988. He is currently with the Institute of Energy Technology, Aalborg University, where he became an Assistant Professor in 1992, Associate Professor in 1996, and full Professor in power electronics and drives in 1998. He has been a part-time Research Programme Leader at Research Center Risoe in wind turbines. In 2006–2010, he was the Dean of the Faculty of Engineering, Science and Medicine at the same place and became a Visiting Professor at Zhejiang University, Hangzhou, China, in 2009. His research interests include power electronics and its applications like wind turbines, PV systems, and adjustable speed drives.

Dr. Blaabjerg has been the Editor-in-Chief of the IEEE TRANSACTIONS ON POWER ELECTRONICS since 2006. He was a Distinguished Lecturer for the IEEE Power Electronics Society from 2005 to 2007 and for the IEEE Industry Applications Society from 2010 to 2011. He received the 1995 Angelos Award for his contribution in modulation technique and the Annual Teacher Prize at Aalborg University, also in 1995. In 1998, he received the Outstanding Young Power Electronics Engineer Award from the IEEE Power Electronics Society. He has received ten IEEE Prize paper awards and another prize paper award at PELINCEC Poland 2005. He received the IEEE Power Electronics Society Distinguished Service Award in 2009 as well as the EPE-PEMC 2010 Council Award.

Pedro Rodríguez (S'99–M'04–SM'10) received the M.Sc. and Ph.D. degrees in electrical engineering from the Technical University of Catalonia (UPC), Barcelona, Spain, in 1994 and 2004, respectively.

He was a Postdoctoral Researcher at the Center for Power Electronics Systems, Virginia Tech, Blacksburg, in 2005, and in the Department of Energy Technology, Aalborg University (AAU) in 2006. He joined the faculty of UPC as an Assistant Professor in 1990, where he became the Director of the Research Center on Renewable Electrical Energy Systems in the Department of Electrical Engineering. He was also a Visiting Professor at the AAU from 2007 to 2011, acting as a co-supervisor of the Vestas Power Program. He still lectures Ph.D. courses at the AAU every year. Since 2011, he has been the Head of Electrical Engineering Division in Abengoa Research, Seville, Spain, although he is a part-time Professor at UPC. He has coauthored one book and more than 100 papers in technical journals and conference proceedings. He is the holder of seven licensed patents. His research interests include integration of distributed generation systems, smart grids, and design and control of power converters.

Dr. Rodríguez is a member of the Administrate Committee of the IEEE Industrial Electronics Society (IES), the General Chair of IEEE-IES Gold and Student Activities, the Vice-Chair of the Sustainability and Renewable Energy Committee of the IEEE Industry Application Society, and a member of the IEEE-IES Technical Committee on Renewable Energy Systems. He is an Associate Editor of the IEEE TRANSACTION ON POWER ELECTRONICS.

Authorized licensed use limited to: Pontificia Universidad Catolica de Chile. Downloaded on March 31,2026 at 16:48:07 UTC from IEEE Xplore. Restrictions apply.