Double Fed Induction Generator
Concepts, Control, LVRT and Wind Power

Descripción

PONTIFICIA
UNIVERSIDAD
CATÓLICA
DE CHILE

pecLAb
POWER & ENERGY CONVERSION LABORATORY

Power and Energy Conversion Laboratory
Research in Power Electronics

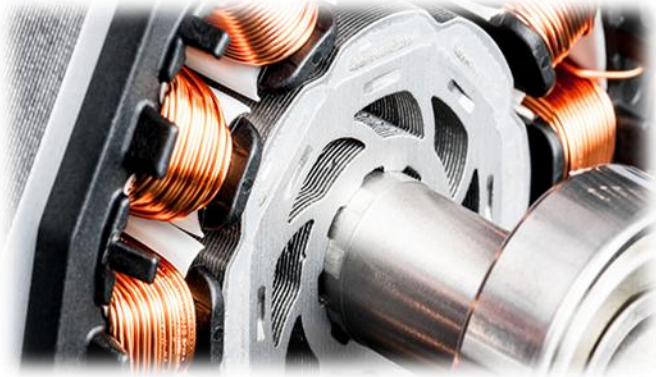

Lecture sections Double Fed Induction Generator (DFIG)

1. Compilation of base papers
2. DFIG Operating Principle
3. Application of DFIG in Wind Energy Systems
4. Overview of DFIG Control Strategies
5. Vector Dynamic Modeling for SFOC of the DFIG
6. SFOC Control System for DFIG with Wind Turbine
7. LVRT Requirements and System-Level Compliance of DFIGs

Section 1: Compilation of base papers

- Following a thorough search on the IEEE Xplore website, 5 prestigious papers studying Grid Synchronization and Grid Connected Converters in its various fields have been shortlisted.

- These papers are used both to present explicit information and to extract concepts and generate our own developments.

1) 2003 – Dynamic Modeling of Doubly Fed Induction Generator Wind Turbines
2) 2011 – Fault Ride-Through of a DFIG Wind Turbine Using a Dynamic Voltage Restorer
3) 2012 – Advanced Control Strategy of DFIG Wind Turbines for Power System Fault Ride-Through
4) 2013 – Comprehensive LVRT Control Strategy for DFIG Wind Turbines With Enhanced Reactive Power Support
5) 2003 – Overview of Control Systems for the Operation of DFIGs in Wind Energy Applications

Section 1: Compilation of base papers

Key content covered in the selected papers:

[1] Fundamental dq-axis dynamic modeling of DFIGs; stator-flux-oriented control (SFOC); independent active and reactive power control through rotor current injection; fault behavior and crowbar protection fundamentals.

[2] Fault Ride-Through enhancement using Dynamic Voltage Restorer (DVR); analysis of symmetrical and asymmetrical grid faults; comparison with crowbar-based LVRT; preservation of P/Q control during faults.

[3] Crowbar-free LVRT strategy based on controlled absorption of mechanical energy; torque reduction and controlled rotor acceleration; mitigation of rotor overcurrent and DC-link overvoltage.

[4] Comprehensive LVRT strategy with enhanced reactive power support; coordinated RSC–GSC control; high capacitive current injection to meet stringent grid-code requirements.

[5] Overview of DFIG control systems for wind energy applications; vector control, DPC/DTC, MPPT, and RSC–GSC coordination; industrial operation under normal and disturbed grid conditions.

Section 2: DFIG Operating Principle

Double Fed Induction Generator

PONTIFICIA
UNIVERSIDAD
CATÓLICA
DE CHILE

Basic Structure of the DFIG

Basic Structure of the Doubly Fed Induction Generator

- Wound-rotor induction machine with electrical access to both stator and rotor.
- Stator directly connected to the grid, operating at fixed voltage and frequency.
- Rotor connected through a back-to-back power electronic converter, enabling controlled excitation.
- Partial-scale converter processes only the slip power (≈ 25–35% of rated power).
- Crowbar protection included to protect the rotor-side converter during severe grid disturbances.

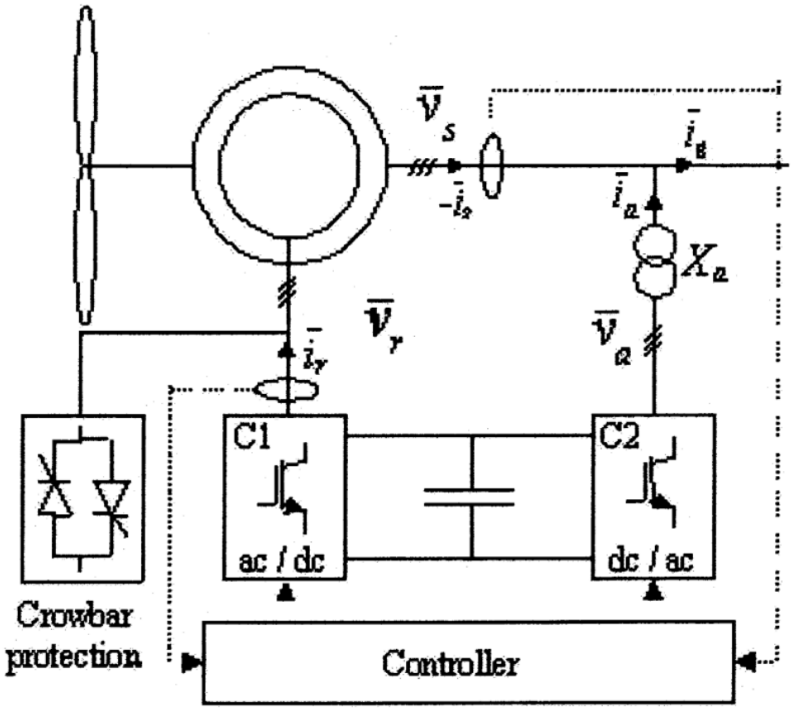

Figure 2.1: Basic configuration of a DFIG wind turbine. [1]

Practical Structure of the DFIG

Practical Construction of a DFIG

- Laminated stator core directly connected to the grid.
- Wound rotor mechanically coupled to the turbine shaft.
- Slip rings and brush system provide electrical connection to the rotor windings.
- Mechanical structure integrates shaft, bearings, housing, and cooling system.
- Physical construction directly enables variable-speed operation with grid synchronization.

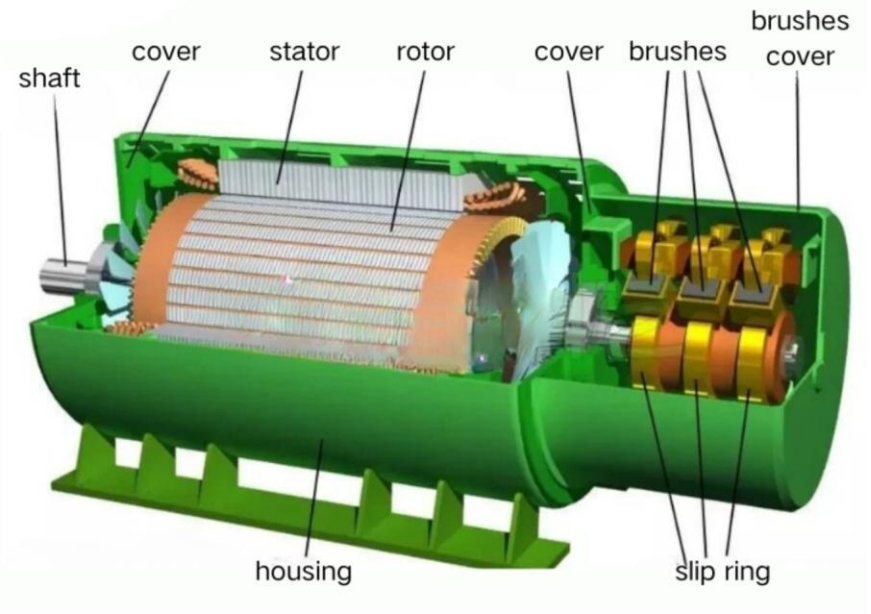

Figure 2.2: Practical structure of DFIG. [6]

Relationship Between Rotor Speed, Slip, and Electrical Frequency

- The **stator of the DFIG** is directly connected to the grid; therefore, its magnetic field always rotates at the **synchronous speed**, determined by grid frequency and machine pole pairs.
- The **mechanical rotor speed is not fixed** and varies according to wind speed, turbine aerodynamics, and mechanical control.
- The **difference between** synchronous speed and mechanical rotor speed is quantified by the **slip**, which defines the relative motion between stator and rotor magnetic fields.
- To maintain controlled electromagnetic interaction, **rotor currents are injected at a frequency proportional to the slip frequency**.
- The rotor-side converter adjusts both the frequency and phase of the rotor currents so that the resulting electromagnetic torque is properly controlled.
- This mechanism enables variable-speed operation of the generator while the stator remains synchronized with the grid, which is the fundamental operating principle of the DFIG.

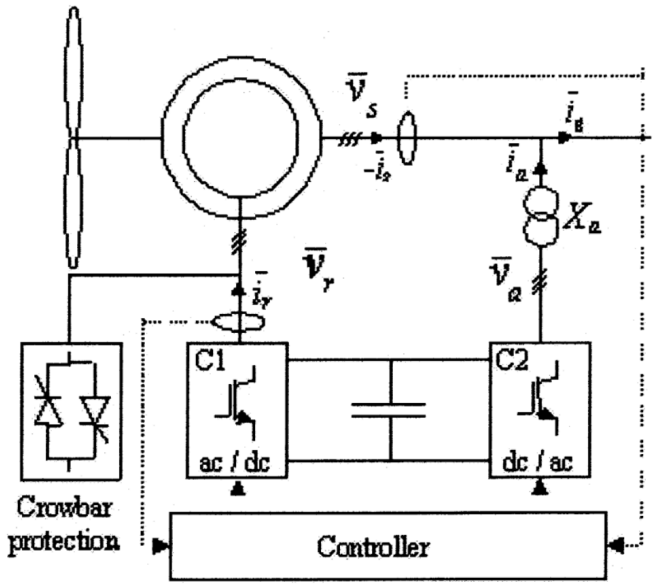

Figure 2.1: Basic configuration of a DFIG wind turbine. [1]

Power Flow and Operating Modes of the DFIG

- In a DFIG, the total generated power is shared between the stator and the rotor.

- The stator is always directly connected to the grid and delivers the main portion of the electrical power.

- The rotor exchanges power with the grid through the back-to-back converter, processing only the slip power.

- When the rotor speed is **below synchronous speed** (Subsynchronous operation):
  - **Slip is positive.**
  - Active power flows **from the grid into the rotor** circuit.
  - The stator simultaneously delivers power to the grid.

- When the rotor speed is **above synchronous speed** (Supersynchronous operation):
  - **Slip is negative.**
  - Active power flows **from the rotor to the grid** through the converter.
  - Both stator and rotor contribute to the total generated power.

- This bidirectional rotor power flow **allows variable-speed operation with a partially rated converter**, which is a defining advantage of the DFIG.

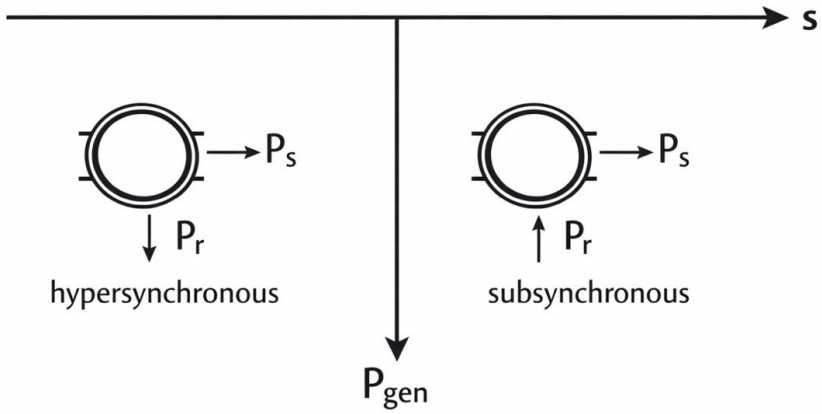

Figure 2.3. Rotor power direction as a function of slip in the generator quadrants of the DFIG. [7]

Decoupled Power Control and Role of the Power Electronic Converters

- A key advantage of the DFIG is the **independent control of active and reactive power**, despite being an induction machine.

- **Active power** is primarily associated with electromagnetic torque and mechanical energy conversion.

- **Reactive power** is associated with magnetic excitation and voltage support at the stator terminals.

- This decoupling is achieved by **controlled injection of rotor currents** with appropriate magnitude, phase, and frequency.

- The **Rotor-Side Converter (RSC)** directly controls:
  - Electromagnetic torque and active power output.
  - Reactive power exchanged between the stator and the grid.

- The **Grid-Side Converter (GSC)** controls:
  - The DC-link voltage, ensuring stable energy exchange between rotor and grid.
  - Additional reactive power support at the grid connection point when required.

- The coordinated operation of the RSC and GSC enables **variable-speed operation, independent P/Q regulation, and grid-compliant** behavior of the DFIG-based wind turbine.

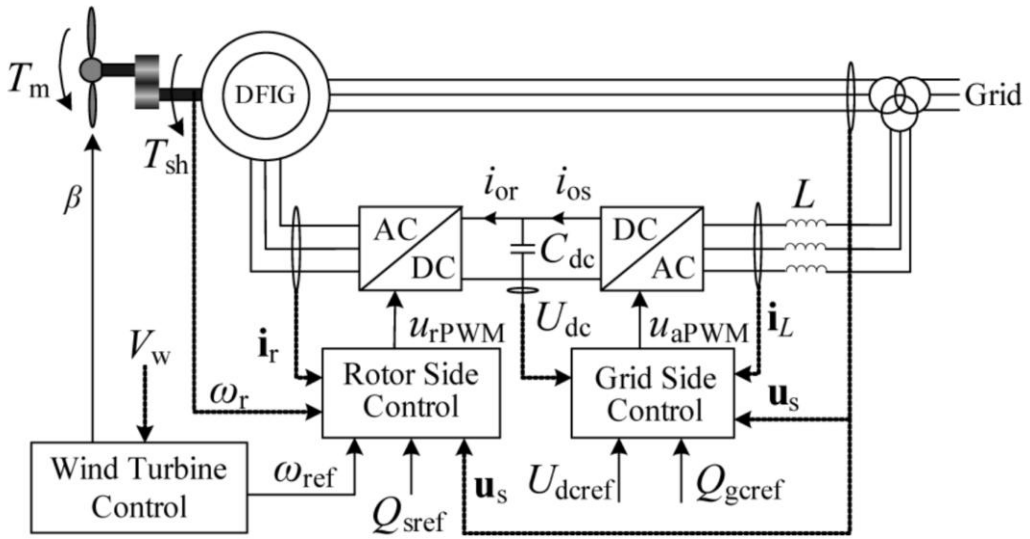

Figure 2.4: Schematic diagram of the DFIG WT system in [3].

Operation Under Grid Disturbances and Protection Elements

- During grid voltage disturbances, sudden variations in stator voltage produce **rapid transients in the stator magnetic flux**.

- Due to electromagnetic coupling, these flux variations induce **high voltages and currents in the rotor windings**, stressing the rotor-side converter.

- The induced rotor currents may lead to:
  - Excessive currents in the rotor converter.
  - **DC-link overvoltage** due to unbalanced power flow during faults.

- To ensure safe operation, DFIG-based wind turbines incorporate **dedicated protection elements**, including:
  - **Crowbar protection,** which temporarily short-circuits the rotor to protect the RSC.
  - **DC-link chopper,** to dissipate excess energy and limit DC-link overvoltage.
  - **Energy Storage Systems (ESS),** to absorb and later release surplus energy.
  - **Stator-side switch,** for disconnection under extreme grid conditions.

- These protection devices **ensure hardware safety** but may temporarily **reduce controllability** of the generator during severe grid disturbances.

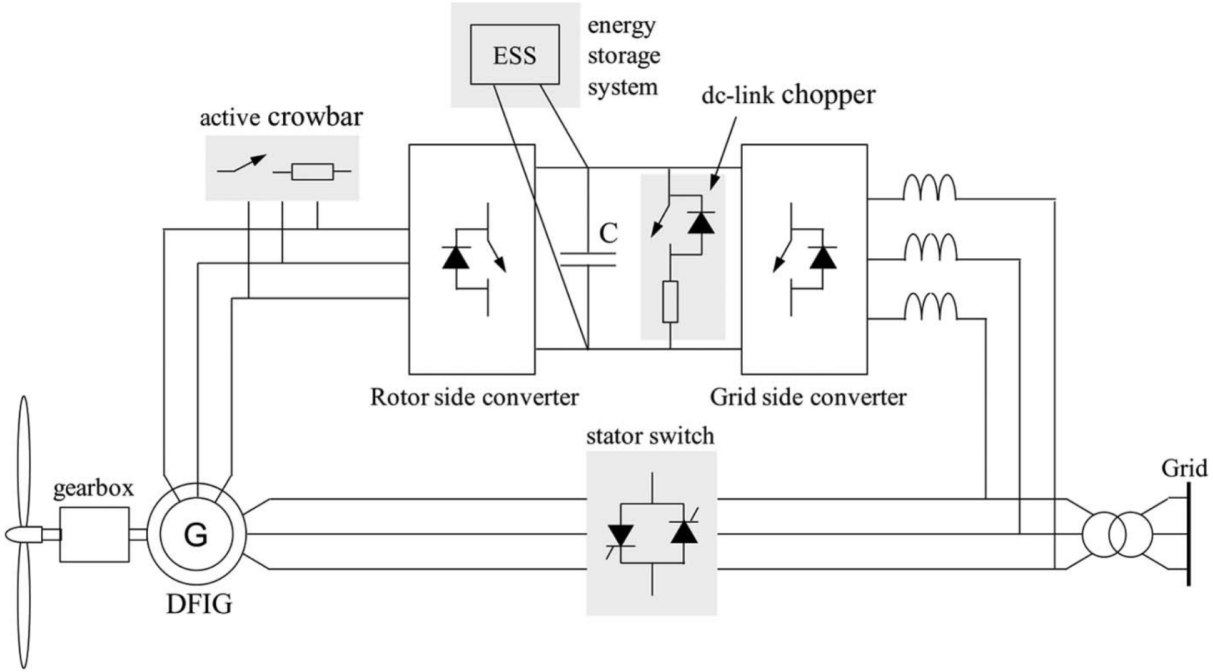

Figure 2.5: Rotor and converter protection devices: crowbar, dc-link chopper, ESS, and ac switch. [5]

Summary of the DFIG Operating Principle

- The DFIG combines a **grid-connected stator** with a **converter-fed rotor**, enabling variable-speed operation under grid-synchronized conditions.

- **Stator power** is always delivered directly to the grid, while **rotor power** is exchanged through a partially rated back-to-back converter.

- Depending on rotor speed:
  - **Subsynchronous operation:** rotor absorbs active power from the grid.
  - **Supersynchronous operation:** rotor delivers active power to the grid.

- Controlled rotor current injection **allows independent regulation of active and reactive power.**

- The coordinated action of the **RSC and GSC** ensures torque control, DC-link stability, and compliant grid interaction.

- The direct stator–grid connection explains both the **high efficiency** of the DFIG and its **sensitivity to grid disturbances**.

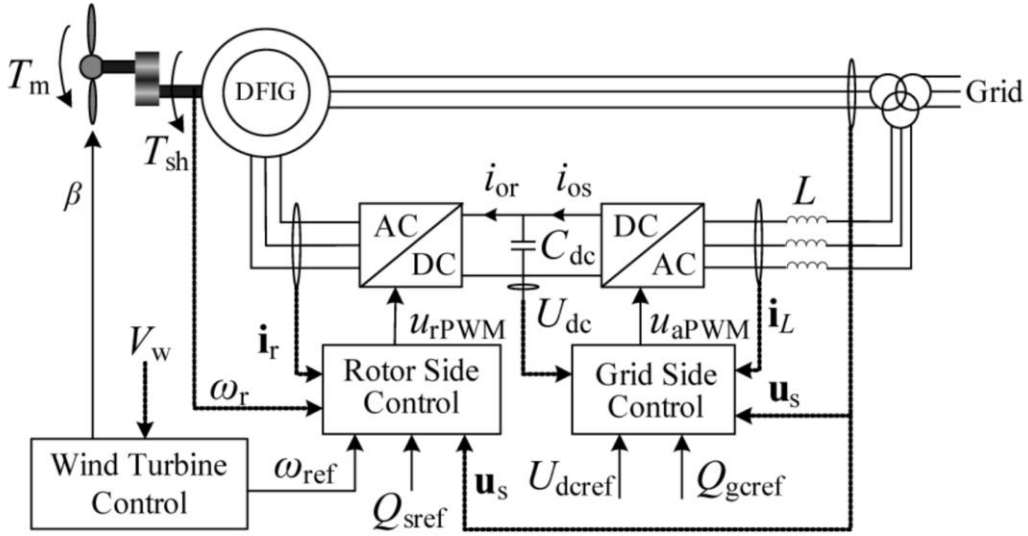

Figure 2.4: Schematic diagram of the DFIG WT system in [3].

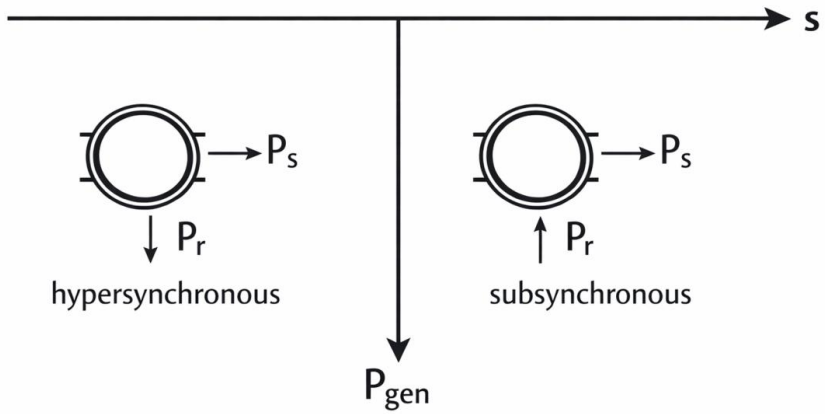

Figure 2.3. Rotor power direction as a function of slip in the generator quadrants of the DFIG. [7]

Section 3: Application of DFIG in Wind Energy Systems

Double Fed Induction Generator

PONTIFICIA
UNIVERSIDAD
CATÓLICA
DE CHILE

Wind Energy

- Installed wind capacity 2024: 1,132,837 MW (~25.4% of renewables).
- Onshore: 1,053,403 MW; Offshore: 79,434 MW.
- Key technologies: HAWT, VAWT, DFIG, synchronous generators.

TABLE 1.11 Share of wind power installations by region (2024)

Region	MW	%
Asia	594 445	13.4
Europe	268 891	6.0
North America	178 847	4.0
South America	45 055	1.0
Oceania	16 626	0.4
Eurasia	15 627	0.3
Africa	9 233	0.2
C. America+Caribbean	2 191	0.05
Middle East	1 921	0.04
Total	1 132 836	≈ 25.4

(Source: IRENA Statistics 2025)

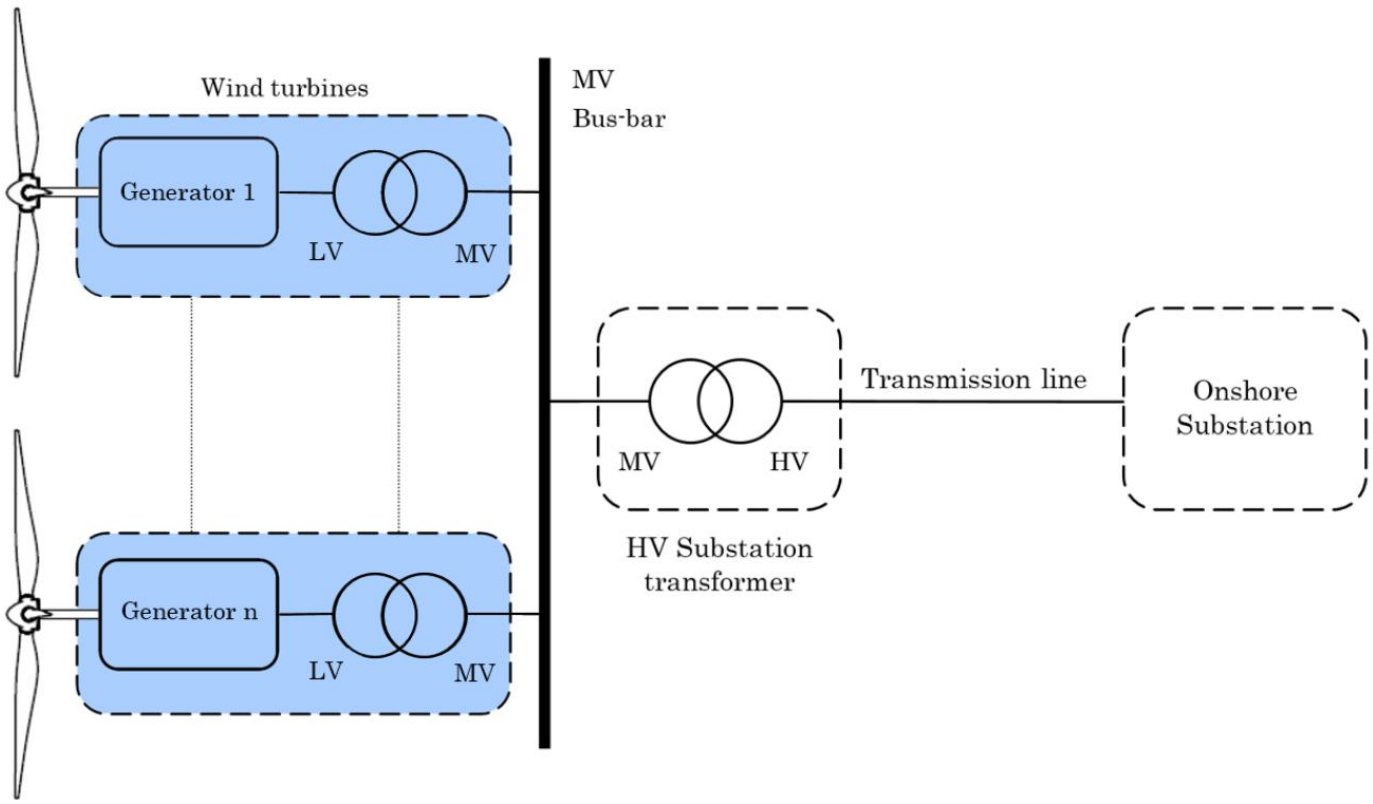

Figure 3.1. Schematic diagram of a typical wind farm.

Wind Energy Conversion Fundamentals

- Wind power generation is based on the conversion of the **kinetic energy of moving air masses** into mechanical and electrical energy.

- The total aerodynamic power available in the wind is given by:

$$P_w = \frac{1}{2}\rho A v^3$$

where:
- ρ is the air density,
- A is the rotor swept area,
- v is the wind speed.
- Only a fraction of this power can be extracted by the turbine.
- The **mechanical power captured by the rotor** is expressed as:

$$P_{\text{mech}} = \frac{1}{2}\rho A v^3 C_p(\lambda, \beta)$$

The power coefficient C_p represents the aerodynamic efficiency of the turbine and depends on:
- the **tip-speed ratio $\boldsymbol{\lambda}$**,
- the **pitch angle $\boldsymbol{\beta}$**.

This relationship highlights that **electrical control alone is insufficient**; efficient wind power generation requires coordinated aerodynamic and electrical control.

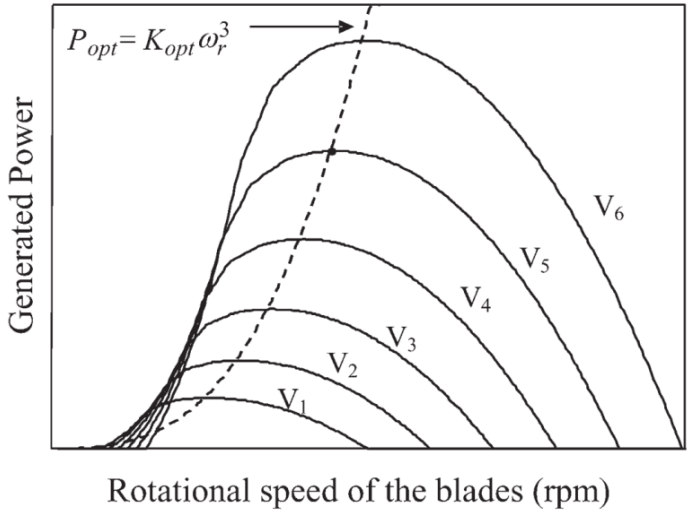

Figure 3.2. Locus for the maximum aerodynamic efficiency for a typical variable-speed wind turbine. [5]

Wind Energy Conversion Fundamentals

- Wind power generation is based on the conversion of the **kinetic energy of moving air masses** into mechanical and electrical energy.

- The total aerodynamic power available in the wind is given by:

$$P_w = \frac{1}{2}\rho A v^3$$

where:
- ρ is the air density,
- A is the rotor swept area,
- v is the wind speed.
- Only a fraction of this power can be extracted by the turbine.
- The **mechanical power captured by the rotor** is expressed as:

$$P_{\text{mech}} = \frac{1}{2}\rho A v^3 C_p(\lambda, \beta)$$

The power coefficient C_p represents the aerodynamic efficiency of the turbine and depends on:
- the **tip-speed ratio $\boldsymbol{\lambda}$**,
- the **pitch angle $\boldsymbol{\beta}$**.

This relationship highlights that **electrical control alone is insufficient**; efficient wind power generation requires coordinated aerodynamic and electrical control.

Turbine Type	Typical TSR	Use Case
Savonius (VAWT)	0.7 – 1.5	Low wind, simple design
Multi-blade (farm)	1 – 3	Water pumping
Darrieus (VAWT)	4 – 6	Medium-scale generation
3-blade HAWT	**6 – 9**	**Modern wind farms**
2-blade HAWT	9 – 12	High-speed generation
1-blade HAWT	12 – 16	Experimental

$$\lambda = \frac{\omega \cdot R}{v}$$

Symbol	Meaning
λ	Tip Speed Ratio (dimensionless)
ω	Angular velocity of the rotor (rad/s)
R	Radius of the rotor (blade length, in meters)
v	Free-stream wind speed (m/s)

Aerodynamic Power Capture and Optimal Operating Trajectory

Aerodynamic Power Capture and Optimal Operating Regions

- In a variable-speed wind turbine, the mechanical power depends on both wind speed and rotor speed.
- This relationship is commonly represented in the power–speed plane, as shown in the figure.
- For each wind speed, there exists an operating point that maximizes power capture.
- The collection of these points defines a locus of maximum aerodynamic efficiency.
- In the partial-load region, the optimal power trajectory follows an approximately cubic law:

$$P_{\text{opt}} = K_{\text{opt}}\,\omega_r^3$$

where:

- ω_r is the rotor angular speed,
- $K_{\{opt\}}$ is a constant determined by turbine aerodynamics.
- Generator torque control is designed to track this trajectory, enabling **maximum energy capture under variable wind conditions**.

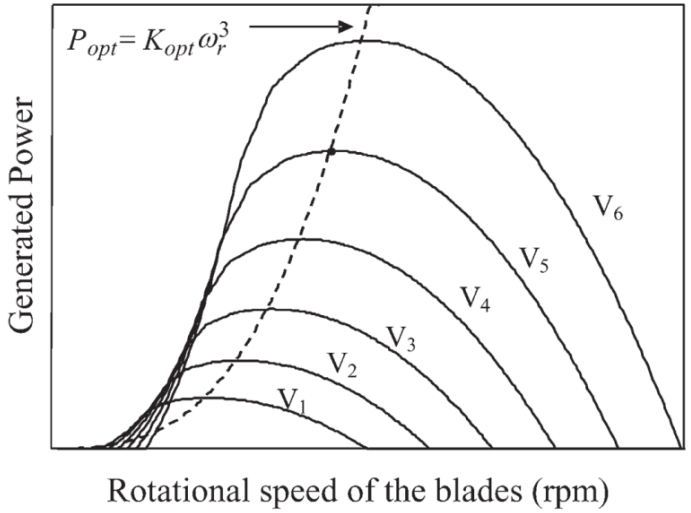

Figure 3.2. Locus for the maximum aerodynamic efficiency for a typical variable-speed wind turbine. [5]

Variable-Speed Operation and Pitch Control

- Variable-speed operation allows wind turbines to maximize energy capture over a wide range of wind speeds.
- For a given pitch angle, an **optimal tip-speed** ratio exists that maximizes the power coefficient C_p.
- By controlling electromagnetic torque, the generator adjusts rotor speed to follow the optimal aerodynamic operating point in **partial-load conditions**.
- At higher wind speeds, **pitch control** is introduced to intentionally reduce aerodynamic efficiency and limit the mechanical power captured from the wind.
- Pitch control acts as a **slow supervisory mechanism**, ensuring rated power operation, mechanical protection, and overspeed prevention.

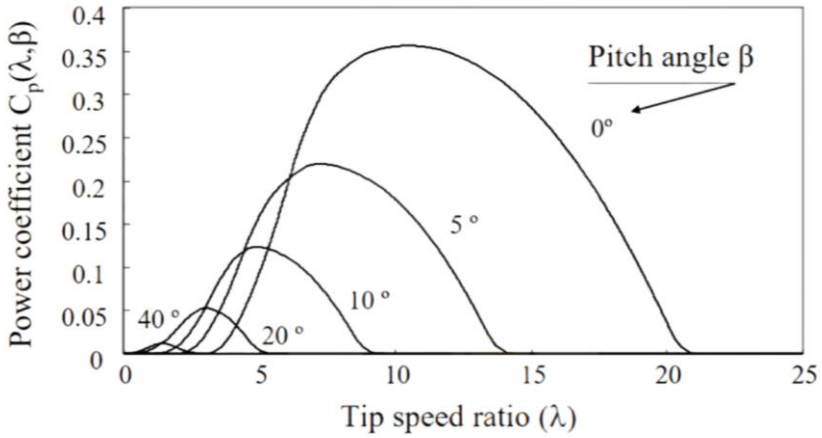

Figure 3.3. Pitch angle impact on Power coefficient vs tip speed ratio. Based on [5]

Mechanical Drive Train and Electrical Architecture

- The wind turbine converts aerodynamic power into mechanical torque, which is transmitted to the generator through the **mechanical drive train**.
- A **gearbox is typically used** to adapt the low rotational speed of the turbine blades to the higher speed required by the generator.
- The DFIG stator is **directly connected to the grid**, while the rotor is connected through a **back-to-back power electronic converter**.
- The DC-link between converters enables **bidirectional energy exchange** between the rotor circuit and the grid.
- This integrated mechanical–electrical architecture **allows independent control of mechanical speed and electrical power injection.**

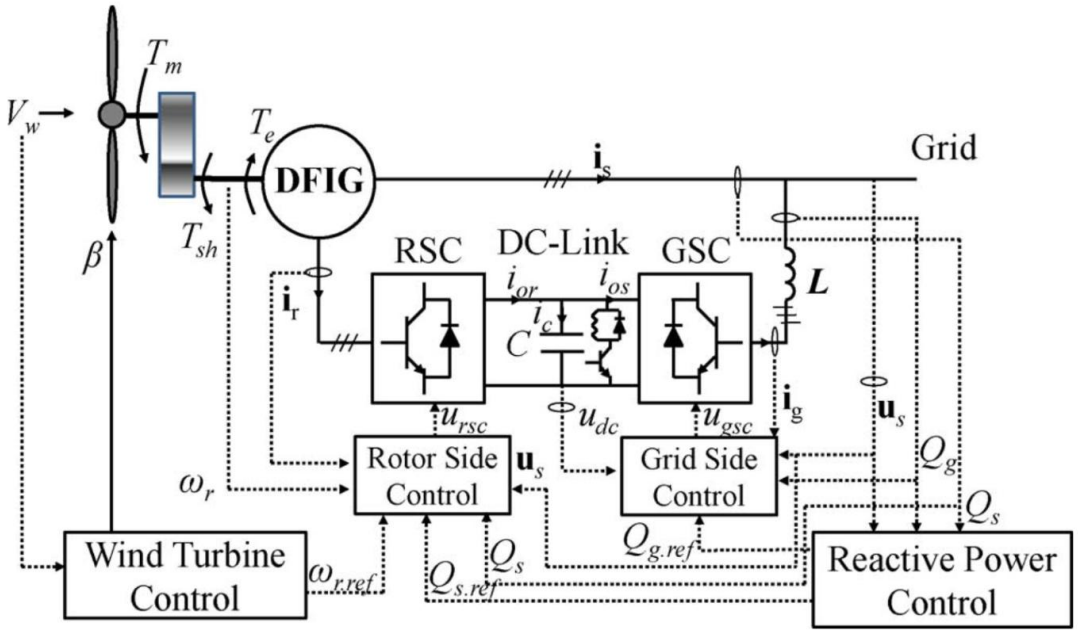

Figure 3.4. Schematic diagram of a DFIG WT system in [4]

Advantages and Industrial Implementation of DFIGs

- The DFIG enables **efficient variable-speed operation** using a partially rated power electronic converter.
- Independent control of active and reactive power allows **grid support capabilities** comparable to synchronous generators.
- Reduced converter size leads to:
  - Lower cost and losses,
  - Higher overall system efficiency.
- These advantages have made the DFIG one of the **most widely adopted generator technologies** in modern wind turbines.
- Commercial solutions are available for multi-megawatt applications, covering both onshore and offshore wind farms.

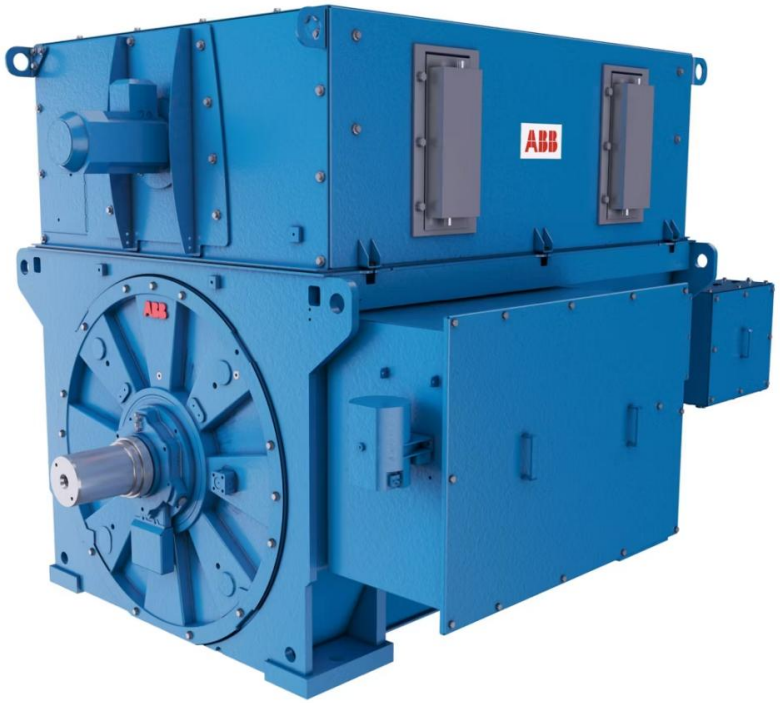

Figure 3.5. DFIG ABB Product Model up to 6 mW for Wind Turbines. [8]

Section 4: Overview of DFIG Control Strategies

Double Fed Induction Generator

PONTIFICIA
UNIVERSIDAD
CATÓLICA
DE CHILE

Control Objectives and Classification of DFIG Control Strategies

The control system of a DFIG-based wind turbine must satisfy **multiple and sometimes conflicting objectives**, involving both mechanical and electrical dynamics.

The main control objectives are:

- Regulation of **electromagnetic torque** to enable variable-speed operation and maximum power extraction.
- **Independent control of active and reactive power** delivered to the grid.
- Stabilization of the **DC-link voltage** connecting the back-to-back converters.
- Provision of **reactive power support** and voltage regulation.
- Robust operation **under wind variations and grid disturbances**.

To achieve these objectives, DFIG control strategies are commonly classified into two main families:

- **Vector control strategies,** based on reference frame transformations and current control:
  - Stator Flux Oriented Control (SFOC),
  - Stator Voltage Oriented Control (SVOC).

- **Direct control strategies,** which regulate torque or power directly:
  - Direct Power Control (DPC),
  - Direct Torque Control (DTC).

- These strategies differ in **complexity, dynamic performance, robustness to disturbances, and industrial adoption**, motivating their comparative analysis in the following sections.

Vector Control Strategies for DFIGs

- Vector control strategies are based on transforming three-phase electrical variables into a **rotating dq reference frame**, where steady-state quantities become quasi-constant.

- This transformation enables **decoupled control of torque and flux**, in a manner analogous to DC machine control.

- In DFIG applications, vector control is mainly applied to the **Rotor-Side Converter (RSC)**, which directly influences the electromagnetic interaction between stator and rotor.

- The most widely used vector control strategies are:
  - **Stator Flux Oriented Control (SFOC),**
  - **Stator Voltage Oriented Control (SVOC).**

- These strategies differ primarily in the choice of reference frame used for orientation, which strongly affects robustness and performance under grid disturbances.

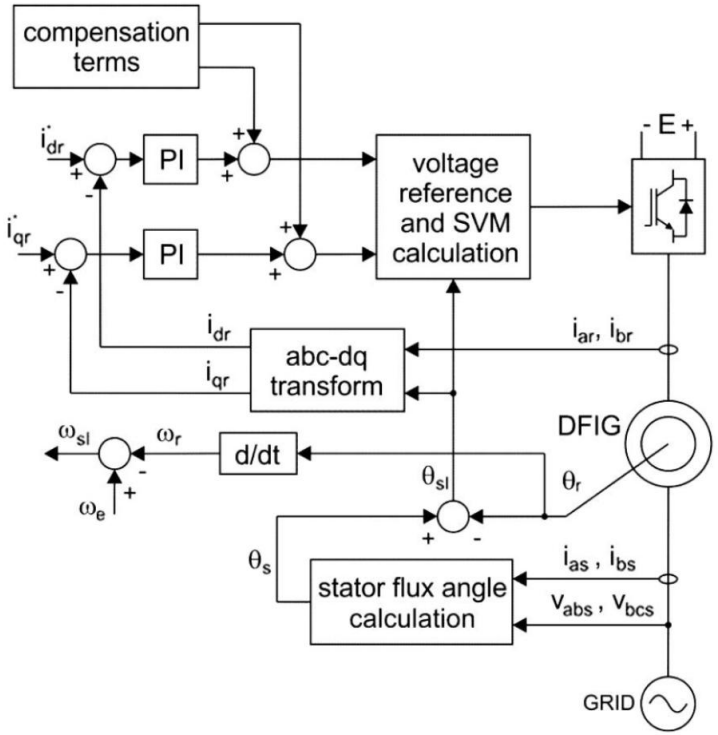

Figure 4.1: Control schematic of a DFIG (RSC) in [5]

Direct Power Control (DPC) for DFIGs

- Direct Power Control (DPC) regulates **active and reactive power directly,** without inner current control loops or explicit dq-current regulation.

- Converter switching states are selected based on **instantaneous power errors**, using predefined switching tables.

- Main characteristics of DPC include:
  - Fast dynamic response,
  - Simple control structure,
  - Reduced dependence on machine parameters.

- However, DPC presents important drawbacks:
  - Higher power and current ripple,
  - Variable switching frequency,
  - Reduced controllability under grid disturbances.

- Due to these limitations, DPC remains of **limited industrial adoption** in DFIG-based wind turbines.

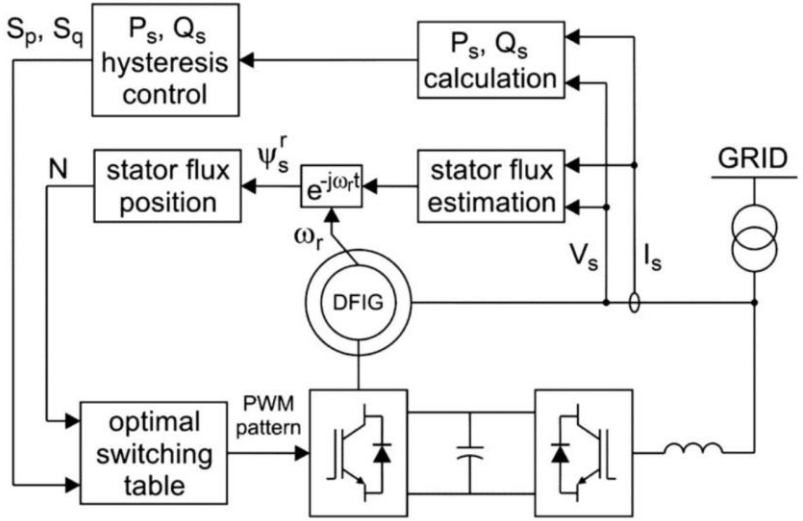

Figure 4.2: Control Scheme DPC for DFIG. [5]

Direct Torque Control (DTC) for DFIGs

- Direct Torque Control (DTC) directly regulates **electromagnetic torque and flux**, typically using hysteresis controllers and switching tables.

- Control actions are based on instantaneous torque and flux errors, without current regulation loops.

- Advantages of DTC include:
  - Very fast torque response,
  - Simple conceptual structure.

- However, in wind energy applications DTC exhibits significant drawbacks:
  - High torque and current ripple,
  - Variable switching frequency,
  - Difficulty in coordinating reactive power control.

- As a result, DTC is **rarely used in commercial DFIG wind turbines**, particularly where grid-code compliance and power quality are critical.

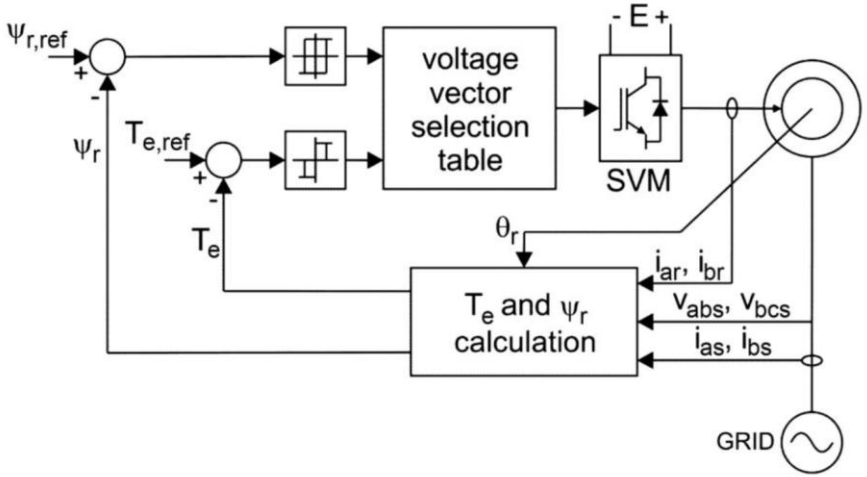

Figure 4.3: Control Scheme DTC for DFIG. [5]

Coordination of RSC and GSC Control

In practical DFIG systems:

- The **rotor-side converter (RSC)** is commonly controlled using **stator-flux-oriented vector control (SFOC),** enabling direct regulation of torque and stator reactive power.

- The **grid-side converter (GSC)** is typically controlled using **grid-voltage-oriented control (SVOC),** where:
  - the d-axis current regulates the DC-link voltage,
  - the q-axis current controls reactive power exchange with the grid.

This combination exploits the physical roles of both converters and provides clear decoupling of control objectives.

Section 5: Vector Dynamic Modeling for SFOC of the DFIG

Double Fed Induction Generator

PONTIFICIA
UNIVERSIDAD
CATÓLICA
DE CHILE

Vector Dynamic Modeling for SFOC of the DFIG

- This section develops the complete dynamic model of the Doubly Fed Induction Generator (DFIG) using vector representations.
- The modeling is carried out progressively, starting from the natural three-phase (abc) reference frame and leading toward a synchronous dq frame aligned with the stator flux.
- The resulting model provides the **analytical foundation for SFOC control design**.

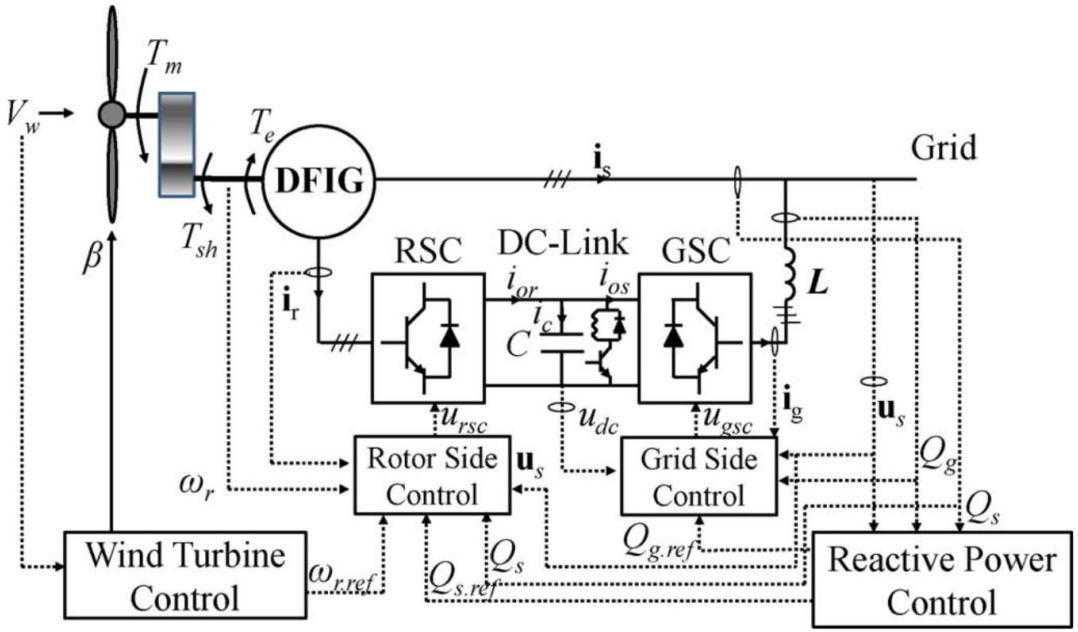

Figure 3.4. Schematic diagram of a DFIG WT system in [4]

Three-Phase (abc) Dynamic Model

- The $\boldsymbol{abc}$ **reference frame** corresponds to the natural coordinate system of a three-phase electrical machine.
- In this frame, voltages, currents, and fluxes are represented exactly as they are **physically measured at the machine terminals**.
- While physically transparent, this representation involves **strong coupling between phases**, making it unsuitable for direct control design.

For the stator windings, the three-phase vectors are defined as:

$$\vec{v}_s = \begin{bmatrix} v_{sa} \\ v_{sb} \\ v_{sc} \end{bmatrix}, \quad \vec{i}_s = \begin{bmatrix} i_{sa} \\ i_{sb} \\ i_{sc} \end{bmatrix}, \quad \vec{\psi}_s = \begin{bmatrix} \psi_{sa} \\ \psi_{sb} \\ \psi_{sc} \end{bmatrix}$$

and analogously for the rotor windings $(\vec{v}_r, \vec{i}_r, \vec{\psi}_r)$.

The electrical dynamics of each phase are described by Faraday's law:

$$\vec{v}_s = R_s \vec{i}_s + \frac{d\vec{\psi}_s}{dt} \qquad \vec{v}_r = R_r \vec{i}_r + \frac{d\vec{\psi}_r}{dt}$$

- Each equation expresses that the applied voltage is composed of a **resistive drop** and the **time derivative of the magnetic flux**.
- The strong phase coupling in this formulation motivates the introduction of **alternative reference frame transformations**, developed in the following sections.

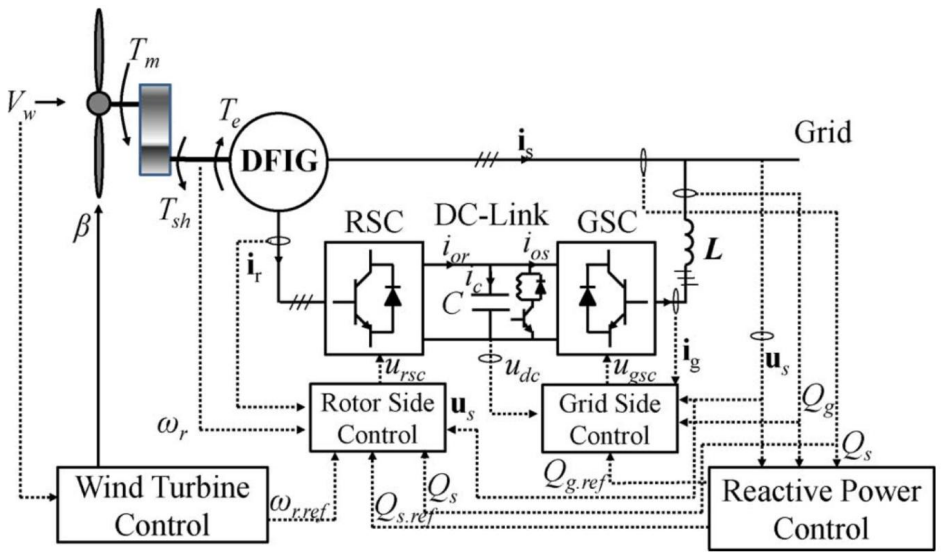

Figure 3.4. Schematic diagram of a DFIG WT system in [4]

Flux Linkages and Magnetic Coupling

- In **balanced and symmetrical machines**, the self-inductances of the phases are equal, as are the mutual inductances between each pair of phases.
- Under these assumptions, the magnetic coupling between phases can be represented using a **symmetric inductance matrix**:

$$\vec{\psi}_{abc} = \begin{bmatrix} L & M & M \\ M & L & M \\ M & M & L \end{bmatrix} \vec{i}_{abc}$$

- This formulation can be simplified by introducing **equivalent inductance parameters per winding**:

$$L_s = L_{ls} + L_m, \quad L_r = L_{lr} + L_m$$

where:

- L_m represents the **magnetizing inductance**, associated with the useful air-gap flux,
- L_{ls} and L_{lr} represent the **stator and rotor leakage inductances**, which do not contribute to torque production.
- The proportion of useful flux with respect to the total flux is characterized by the **leakage coefficient**:

$$\sigma = 1 - \frac{L_m^2}{L_s L_r}, \quad L_\sigma = L_{ls} + L_{lr}$$

- A **low value of σ** indicates strong magnetic coupling between stator and rotor, which is desirable for efficient energy transfer.
- At this stage, the model preserves a **direct physical meaning**, but still involves **phase-coupled variables**, motivating the introduction of reference-frame transformations in the following sections.

Clarke Transformation ($\alpha\beta 0$ Reference Frame)

- To reduce the complexity of the three-phase abc model, electrical variables are projected onto a **stationary orthogonal reference frame**, known as the $\alpha\beta 0$ frame.
- This transformation eliminates phase coupling while **preserving the physical meaning** of voltages, currents, and fluxes.
- For a generic three-phase quantity $x = \{v,\, i,\, \psi\}$, the Clarke transformation invariant in amplitude is:

$$\begin{bmatrix} x_\alpha \\ x_\beta \\ x_0 \end{bmatrix} = \frac{2}{3} \begin{bmatrix} 1 & -\frac{1}{2} & -\frac{1}{2} \\ 0 & \frac{\sqrt{3}}{2} & -\frac{\sqrt{3}}{2} \\ \frac{1}{2} & \frac{1}{2} & \frac{1}{2} \end{bmatrix} \begin{bmatrix} x_a \\ x_b \\ x_c \end{bmatrix}$$

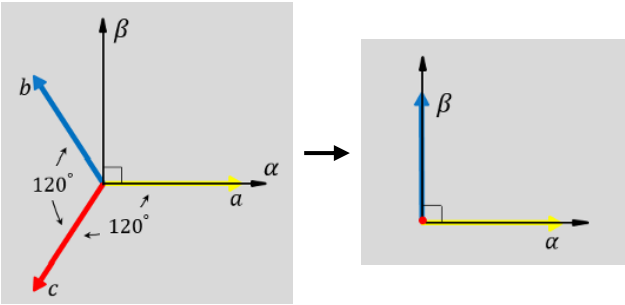

- In balanced three-phase systems, the zero-sequence component x_0 is zero, and all dynamics are contained in the $\alpha\beta$ plane.
- In the $\alpha\beta$ frame:
  - Balanced three-phase signals appear as **vectors rotating at constant angular speed**,
  - The dynamic equations preserve the same structure:

$$\vec{v}_{s,\alpha\beta} = R_s \vec{i}_{s,\alpha\beta} + \frac{d\vec{\psi}_{s,\alpha\beta}}{dt}$$

$$\vec{v}_{r,\alpha\beta} = R_r \vec{i}_{r,\alpha\beta} + \frac{d\vec{\psi}_{r,\alpha\beta}}{dt}$$

- This representation significantly simplifies analysis, but the signals remain **time-varying**, motivating the introduction of a **rotating reference frame** in the next section.

Synchronous dq Transformation

- In the stationary $\alpha\beta$ reference frame, balanced three-phase electrical variables appear as **vectors rotating at constant angular speed**, which complicates controller design due to their sinusoidal time variation.
- The synchronous dq transformation (Park transformation) is applied to express these variables in a **rotating reference frame**, rendering them approximately constant under steady-state conditions.
- The $\alpha\beta$ components are projected onto the d and q axes using the rotation matrix:

$$P(\theta) = \begin{bmatrix} \cos\theta & \sin\theta \\ -\sin\theta & \cos\theta \end{bmatrix}, \qquad \begin{bmatrix} x_d \\ x_q \end{bmatrix} = P(\theta) \begin{bmatrix} x_\alpha \\ x_\beta \end{bmatrix}$$

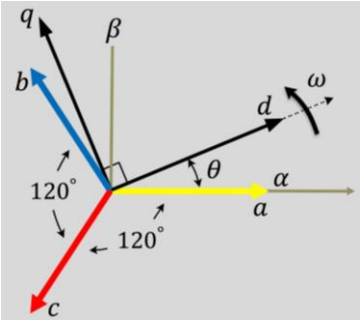

- The choice of the angular position θ defines the reference frame.
  In DFIG-based wind turbines, it is common to use:
  - a **synchronous reference frame aligned with the stator field**, where: $\theta = \omega_e t$,
  - and a **relative reference frame for the rotor**, rotating at the slip frequency: $\omega_{sl} = \omega_e - \omega_r$

- When differentiating a vector expressed in dq coordinates, an additional term appears due to the rotation of the reference frame:

$$\frac{d\vec{x}_{dq}}{dt} = \frac{d}{dt}\left(P(\theta)\vec{x}_{\alpha\beta}\right) = P(\theta)\frac{d\vec{x}_{\alpha\beta}}{dt} + \omega J \vec{x}_{dq}, \qquad J = \begin{bmatrix} 0 & 1 \\ -1 & 0 \end{bmatrix}$$

dq Dynamic Equations of the DFIG

- Applying the synchronous dq transformation to the electrical model of the DFIG expressed in $\alpha\beta$ coordinates yields the dq **dynamic voltage equations**.
- For the stator windings:

$$\vec{v}_{s,dq} = R_s \vec{i}_{s,dq} + \frac{d\vec{\psi}_{s,dq}}{dt} - \omega_e J \vec{\psi}_{s,dq}$$

- For the rotor windings:

$$\vec{v}_{r,dq} = R_r \vec{i}_{r,dq} + \frac{d\vec{\psi}_{r,dq}}{dt} - \omega_{sl} J \vec{\psi}_{r,dq}$$

- Each voltage equation consists of three terms:
  - the **resistive voltage drop**,
  - the **inductive term associated with flux variation**,
  - and the **reference-frame rotation term**, which introduces **cross-coupling between the d and q axes**.
- The rotation term ($\omega J \vec{\psi}$) represents the electromotive force due to rotation and is responsible for the dynamic coupling between orthogonal components.
- One of the key objectives of vector control is precisely to **compensate for this coupling**, enabling independent control loops along the d and q axes.

Choice of State Variables for the DFIG

- For the analysis and control of the DFIG, it is convenient to select the following **state variables**:
  - the **stator flux vector** $\vec{\psi}_{s,dq}$,
  - the **rotor current vector** $\vec{i}_{r,dq}$.
- This choice directly reflects the **physical architecture of the system**:
  - the stator is directly connected to the grid; hence its flux is largely imposed,
  - the rotor is connected through a power electronic converter, allowing its currents to be actively controlled.
- Starting from the magnetic flux linkage equations

$$\vec{\psi}_{s,dq} = L_s \vec{i}_{s,dq} + L_m \vec{i}_{r,dq}$$

$$\vec{\psi}_{r,dq} = L_m \vec{i}_{s,dq} + L_r \vec{i}_{r,dq}$$

- The stator current can be expressed in terms of the chosen state variables as:

$$\vec{i}_{s,dq} = \frac{\vec{\psi}_{s,dq} - L_m \vec{i}_{r,dq}}{L_s}$$

- Substituting this expression into the rotor flux equation yields:

$$\vec{\psi}_{r,dq} = \frac{L_m}{L_s} \vec{\psi}_{s,dq} + \sigma L_r \vec{i}_{r,dq}, \qquad \sigma = 1 - \frac{L_m^2}{L_s L_r}$$

Stator and Rotor Voltage Models in the Selected State Variables

- Using the stator current expression in the stator voltage equation, the stator **voltage model becomes**:

$$\vec{v}_{s,dq} = \frac{d\vec{\psi}_{s,dq}}{dt} - \omega_e J \vec{\psi}_{s,dq} + \frac{R_s}{L_s}\vec{\psi}_{s,dq} - \frac{R_s L_m}{L_s}\vec{i}_{r,dq}$$

- Substituting the rotor flux expression into the rotor voltage equation yields the **rotor voltage dynamic model**:

$$\begin{aligned}\vec{v}_{r,dq} = \sigma L_r \frac{d\vec{i}_{r,dq}}{dt} + \left(R_r + \frac{L_m^2 R_s}{L_s^2}\right)\vec{i}_{r,dq} + \frac{L_m}{L_s}\vec{v}_{s,dq} \\ - \frac{L_m}{L_s}\left(\frac{R_s}{L_s} I - \omega_e J\right)\vec{\psi}_{s,dq} - \omega_{sl} J \left(\frac{L_m}{L_s}\vec{\psi}_{s,dq} + \sigma L_r \vec{i}_{r,dq}\right)\end{aligned}$$

where:

$$I = \begin{bmatrix} 1 & 0 \\ 0 & 1 \end{bmatrix} \quad \& \quad J = \begin{bmatrix} 0 & 1 \\ -1 & 0 \end{bmatrix}$$

- Although this model is mathematically complex, it exhibits a structure that is **well suited for vector control design**, since:
  - the stator flux is imposed by the grid,
  - the rotor currents are directly controlled by the converter.

Electromagnetic Torque Expression in the DFIG

- The electromagnetic torque in an induction machine arises from the **interaction between the stator magnetic field and the rotor currents.**
- From an energetic perspective, the torque can be obtained as the derivative of the magnetic co-energy with respect to the angular displacement between the magnetic fields.
- In complex notation, the electromagnetic torque is given by:

$$T_e = \frac{3}{2} p \, \mathrm{Im} \left\{ \vec{\psi}_s^* \vec{i}_s \right\}$$

Where:

- p is the number of pole pairs,
- $(\cdot)^*$ denotes the complex conjugate.
- In synchronous dq coordinates aligned with the stator, this expression becomes:

$$T_e = \frac{3}{2} p \left(\psi_{sd} i_{sq} - \psi_{sq} i_{sd} \right)$$

- If a **stator-flux-oriented (SFO)** reference frame is adopted, the q-axis stator flux component vanishes ($\psi_{sq} = 0$), and the torque expression simplifies to:

$$T_e = \frac{3}{2} p \, \psi_{sd} i_{sq}$$

- This result reveals a **direct relationship between the q-axis current component and the electromagnetic torque**.
- At constant stator flux magnitude, controlling i_{sq} is therefore equivalent to **controlling electromagnetic torque**.

Active and Reactive Power Expressions in the SFO Reference Frame

- The stator active and reactive powers in synchronous dq coordinates are given by:

$$P = \frac{3}{2}\left(v_{sd}i_{sd} + v_{sq}i_{sq}\right), \qquad Q = \frac{3}{2}\left(v_{sq}i_{sd} - v_{sd}i_{sq}\right)$$

- In steady-state operation, assuming:
  - a **small stator resistance**,
  - an approximately **constant stator flux**,

- These expressions can be approximated as:

$$P \approx \frac{3}{2}\omega_e\psi_{sd}i_{sq}, \qquad Q \approx \frac{3}{2}\omega_e\psi_{sd}i_{sd}$$

- These relationships show that, in a **stator-flux-oriented reference frame**:
  - **active power** is regulated through the **q-axis current $\boldsymbol{i_{sq}}$**,
  - **reactive power** is regulated through the **d-axis current $\boldsymbol{i_{sd}}$**.

- This establishes the fundamental basis for **decoupled active and reactive power control** in DFIGs using SFOC.

Air-Gap Power and Slip Power

- The electromagnetic interaction between stator and rotor transfers power across the air gap, known as **air-gap power**:

$$P_0 = T_e \, \omega_s$$

- The power converted into electrical output is a fraction of the air-gap power, while the remaining part corresponds to the **slip power**:

$$P_{\text{conv}} = (1 - s)P_0, \qquad P_{\text{slip}} = sP_0$$

Where:

$$s = \frac{\omega_s - \omega_r}{\omega_s}$$

- The slip s directly determines how power is split between stator and rotor.
- Slip is not just a speed difference; it directly defines how much power the rotor circuit must process.

Power Flow Interpretation in the DFIG

- In a DFIG, the total electrical output power can be written as:

$$P_{\text{tot}} \approx P_s + P_r \approx (1-s)P_0$$

- The rotor-side converter processes only the slip power, whose magnitude is approximately:

$$|P_r| \approx |s|P_0$$

- Thus, the fraction of the total power processed by the converter is:

$$\frac{|P_r|}{|P_s| + |P_r|} \approx |s|$$

Key interpretation:

- Near synchronous speed ($s \to 0$) the rotor power is very small.
- For typical wind turbine operation, **slip is limited, allowing**:
  - partial-scale converters,
  - higher overall efficiency,
  - lower cost and losses.
- Physical interpretation:
  - **Subsynchronous operation ($s > 0$):** rotor absorbs power from the grid.
  - **Supersynchronous operation ($s < 0$):** rotor injects power into the grid

Magnetizing Current Concept

- In stator-flux-oriented control (SFO), the stator flux vector is aligned with the d-axis:

$$\psi_{sq} = 0, \qquad \psi_{sd} = |\vec{\psi}_s|$$

- To characterize the excitation level of the machine, the **magnetizing current $\boldsymbol{i_m}$** is defined as:

$$i_m \triangleq \frac{\psi_{sd}}{L_m}$$

- The magnetizing current represents the **equivalent current that produces the stator flux** through the magnetizing inductance
- Using the stator flux linkage relationship:

$$\psi_{sd} = L_s i_{sd} + L_m i_{rd}$$

- The magnetizing current can be expressed as:

$$i_m = i_{rd} + \frac{L_s}{L_m} i_{sd}, \quad \Rightarrow \quad \psi_{sd} = L_m i_m$$

- Although i_m is not a directly measured current, it provides a **compact and physically meaningful representation** of the stator excitation level.

Torque and Power Expressions in Terms of the Magnetizing Current

- Substituting the magnetizing current definition into the electromagnetic torque expression yields:

$$T_e = \frac{3}{2}\, p\, L_m\, i_m\, i_{sq}$$

- This expression shows that, at constant magnetizing current:
  - electromagnetic torque is **linearly controlled** through the q-axis stator current i_{sq}
- Rewriting the steady-state power expressions in terms of i_m:

$$P \approx \frac{3}{2}\,\omega_e L_m i_m i_{sq}, \qquad Q \approx \frac{3}{2}\,\omega_e L_m i_m i_{sd}$$

- These equations confirm that, under SFO:
  - **active power** is associated with the q-axis current,
  - **reactive power** is associated with the d-axis current.
- Fixing i_m establishes a clear **separation between excitation (flux)** and **power control**, which is the core principle of SFOC..

Reference Synthesis for Active and Reactive Power Control

- Given a desired magnetizing current reference i_m^*, the stator current references required to achieve the active and reactive power objectives are:

$$i_{sq}^* = \frac{P^*}{\frac{3}{2}\,\omega_e L_m i_m^*} \qquad i_{sd}^* = \frac{Q^*}{\frac{3}{2}\,\omega_e L_m i_m^*}$$

- From the magnetization relationship, the corresponding rotor d-axis current reference is obtained as:

$$i_{rd}^* = i_m^* - \frac{L_s}{L_m} i_{sd}^*$$

- The rotor q-axis current reference is adjusted through a current controller so that:

$$i_{sq} \rightarrow i_{sq}^*$$

- This formulation shows that:
  - the **reference currents emerge directly from the machine equations**,
  - no heuristic decoupling assumptions are required.
- The resulting structure provides the analytical foundation for the SFOC control system developed in the next section.

Preview of Section 6:
SFOC Control System for DFIG with Wind Turbine

Double Fed Induction Generator

PONTIFICIA
UNIVERSIDAD
CATÓLICA
DE CHILE

Preview – Reference Frames and Flux Orientation

The control strategy developed in the next chapter is based on a **geometrical interpretation of the machine variables** using multiple reference frames.

In stator-flux-oriented control (SFO):

- the synchronous dq reference frame is **aligned with the stator flux vector**,
- the stator flux rotates at the synchronous electrical speed ω_s, imposed by the grid.

The DFIG naturally involves **three reference frames**:

- the stator-linked frame, rotating at $\omega_s = \omega_e$
- the rotor-linked frame, rotating at ω_r,
- the synchronous reference frame, aligned with $\vec{\psi}_s$.

The relative angular displacement between the stator and rotor frames defines the **slip angle**:

$$\theta_{sl} = \theta_s - \theta_r$$

This geometrical construction provides:

- a clear physical meaning to the d and q axes,
- and the foundation for **decoupled control of torque, flux, and power**.

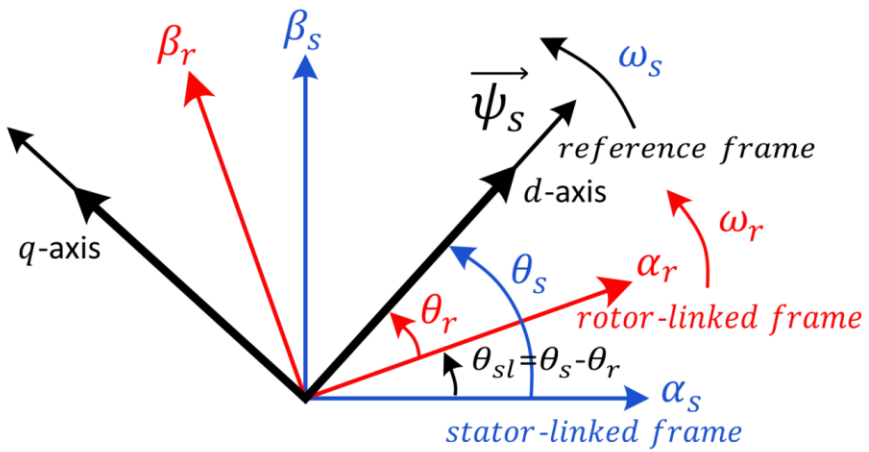

Figure 6.1: Stator Flux Orientation Frames

Preview – Hierarchical Control Structure of the DFIG

Based on the dq model and reference synthesis developed previously, Section 6 develops the **complete SFOC control system for RSC** in DFIG wind turbine.

The control structure is **hierarchical**, organized according to dynamic time scales:

Inner electrical loops:
- decoupled rotor current control in the d and q axes.

Intermediate loops:
- electromagnetic torque and rotor speed control,
- reactive power or magnetization control.

Supervisory level:
- reference generation from wind turbine operation and MPPT.

The following control blocks will be analyzed in detail:
- **Rotor-Side Converter (RSC)** current control,
- speed and torque control loop,
- reactive power control loop.

Each control loop will be derived directly from:
- the machine equations,
- and the physical interpretation established in the previous chapter.

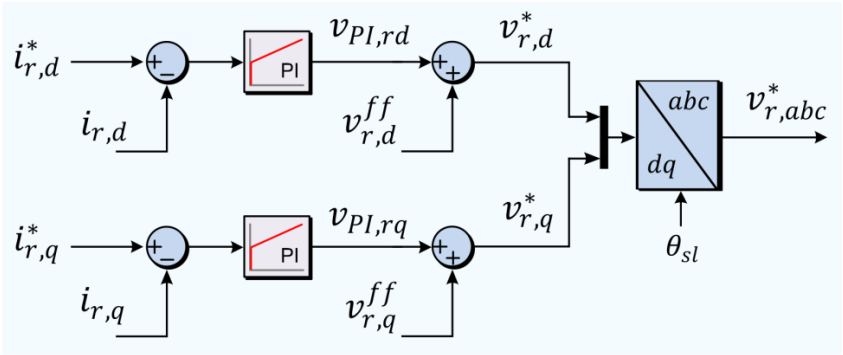

Figure 6.2: Decoupled Rotor Current Control Scheme.

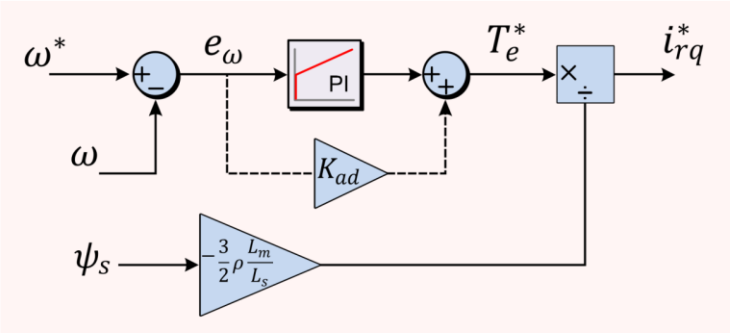

Figure 6.3: Speed Control Scheme

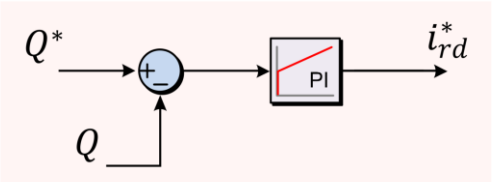

Figure 6.4: Reactive Power Control Scheme

Presentation references

The 5 selected papers and extras

PONTIFICIA
UNIVERSIDAD
CATÓLICA
DE CHILE

References

[1] J. Ekanayake, L. Holdsworth, X. Wu, and N. Jenkins, “Dynamic modeling of doubly fed induction generator wind turbines,” IEEE Transactions on Power Systems, vol. 18, no. 2, pp. 803–809, 2003.

[2] C. Wessels, F. Gebhardt, and F. W. Fuchs, “Fault ride-through of a dfig wind turbine using a dynamic voltaje restorer during symmetrical and asymmetrical grid faults,” IEEE Transactions on Power Electronics, vol. 26, no. 3, pp. 807–815, 2011.

[3] L. Yang, Z. Xu, J. Ostergaard, Z. Y. Dong, and K. P. Wong, “Advanced control strategy of dfig wind turbines for power system fault ride through,” IEEE Transactions on Power Systems, vol. 27, no. 2, pp. 713–722, 2012.

[4] D. Xie, Z. Xu, L. Yang, J. Østergaard, Y. Xue, and K. P. Wong, “A comprehensive lvrt control strategy for dfig wind turbines with enhanced reactive power support,” IEEE Transactions on Power Systems, vol. 28, no. 3, pp. 3302–3310, 2013.

[5] R. Cardenas, R. Pena, S. Alepuz, and G. Asher, “Overview of control systems for the operation of dfigs in wind energy applications,” IEEE Transactions on Industrial Electronics, vol. 60, no. 7, pp. 2776–2798, 2013.

[6] Lamnow. (2025, Sep.) Wind turbines with doubly-fed generator. Accessed: 2026-03-20. [Online]. Available: https://lamnow.com/wind-turbines-with-doubly-fed-generator/

[7] A. Stampbach. (2024, Jun.) Dfig (doubly-fed induction generator) control for wind turbines. imperix. Technical Note. Accessed: 2026-03-20. [Online]. Available: https://imperix.com/doc/implementation/dfig-generator-control-for-wind-turbines

[8] ABB. Doubly-fed generators. ABB. Accessed: 2026-03-20. [Online]. Available: https://www.abb.com/global/en/areas/motion/motors-generators/generators/generators-for-renewables/doubly-fed-generators

[9] Plexim GmbH. Application example 282. Plexim. Accessed: 2026-03-20. [Online]. Available: https://www.plexim.com/support/application-examples/282

POWER & ENERGY CONVERSION LABORATORY

Department of Electrical Engineering
Pontificia Universidad Católica de Chile
peclab.ing.uc.cl