Double Fed Induction Generator
Concepts, Control, LVRT and Wind Power

Descripción

PONTIFICIA
UNIVERSIDAD
CATÓLICA
DE CHILE

pecLAb
POWER & ENERGY CONVERSION LABORATORY

Power and Energy Conversion Laboratory
Research in Power Electronics

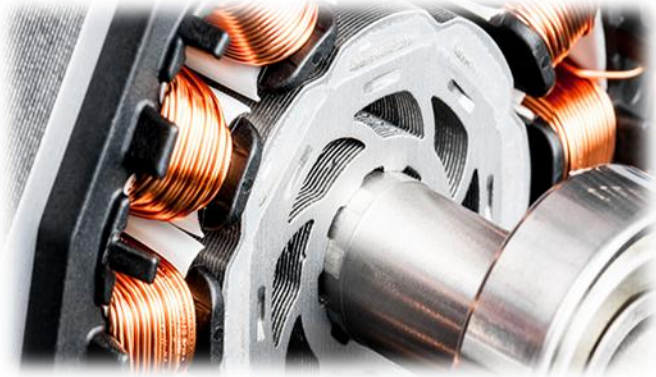

Lecture sections Double Fed Induction Generator (DFIG)

1. Compilation of base papers
2. DFIG Operating Principle
3. Application of DFIG in Wind Energy Systems
4. Overview of DFIG Control Strategies
5. Vector Dynamic Modeling for SFOC of the DFIG
6. SFOC Control System for DFIG with Wind Turbine
7. LVRT Requirements and System-Level Compliance of DFIGs

PONTIFICIA UNIVERSIDAD CATÓLICA DE CHILE

Section 6: SFOC Control System for DFIG with Wind Turbine

Double Fed Induction Generator

PONTIFICIA
UNIVERSIDAD
CATÓLICA
DE CHILE

Introduction to the SFOC Control System

SFOC Control System for the DFIG

- In the previous chapter, a control-oriented dynamic model of the DFIG was derived using synchronous dq coordinates aligned with the stator flux.

- This model revealed a natural decoupling between:
  - electromagnetic torque and q-axis current,
  - stator flux (excitation) and d-axis current.

- Based on these results, the Stator-Flux-Oriented Control (SFOC) strategy can be formulated.

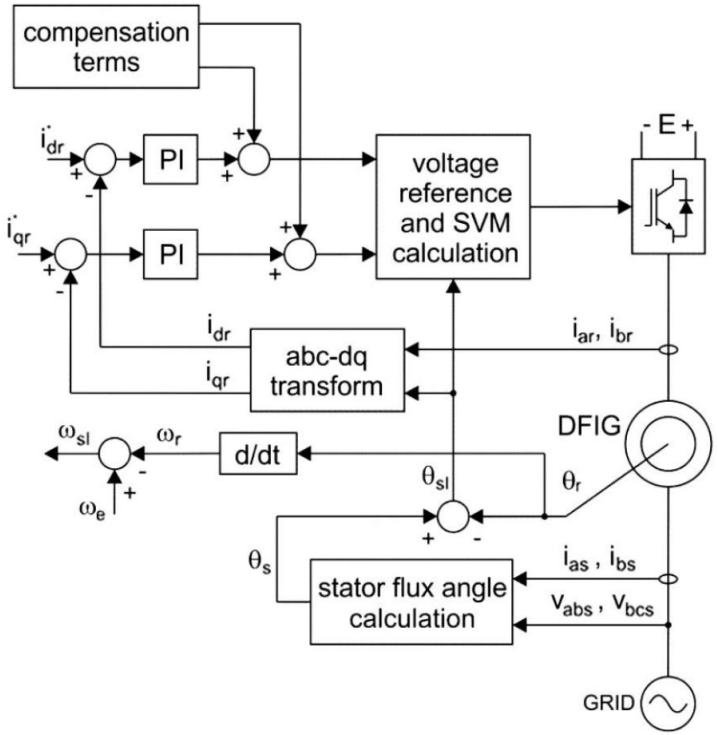

Figure 4.1: Control schematic of a DFIG (RSC) in [5]

Global Control Objectives and Converter Roles

Control Objectives and System Partitioning

- The control system must simultaneously achieve:
  - regulation of electromagnetic torque and rotor speed,
  - independent control of stator active and reactive power,
  - stable DC-link voltage,
  - coordinated interaction with the electrical grid.
- These objectives are fulfilled through a functional separation between converters:
  - **Rotor-Side Converter (RSC)** controls the electrical machine,
  - **Grid-Side Converter (GSC)** manages energy exchange with the grid.
- In this chapter:
  - the focus is placed on the **RSC control system**, where SFOC is implemented,
  - the GSC control is introduced afterward to complete the system viewpoint.
- The resulting control architecture enables **variable-speed operation**, compatibility with MPPT, and preparedness for grid-fault control strategies.

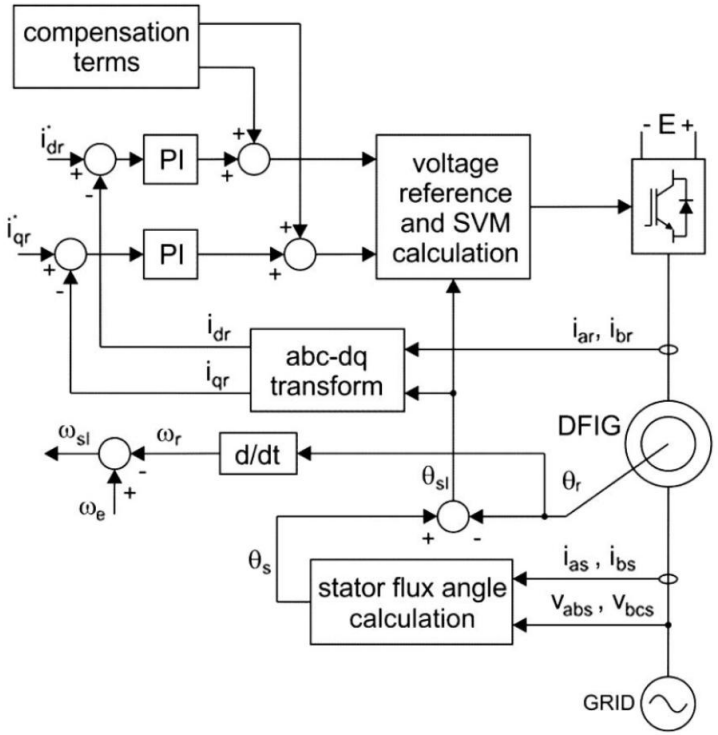

Figure 4.1: Control schematic of a DFIG (RSC) in [5]

Geometrical Interpretation of Stator Flux Orientation

Stator-Linked, Rotor-Linked, and Synchronous Reference Frames

- The DFIG naturally involves multiple reference frames due to its physical structure:
  - **stator-linked reference frame**, fixed to the stator windings,
  - **rotor-linked reference frame**, rotating with the mechanical rotor,
  - **synchronous reference frame**, rotating at grid synchronous speed.

- The stator is directly connected to the grid; therefore:
  - the stator voltage, and consequently, the stator flux, rotate at the **synchronous electrical angular speed:**

$$\omega_s = \omega_e$$

- The rotor-linked reference frame rotates at the mechanical speed:

$$\omega_r$$

- The spatial and temporal relationships between these frames play a central role in vector control.

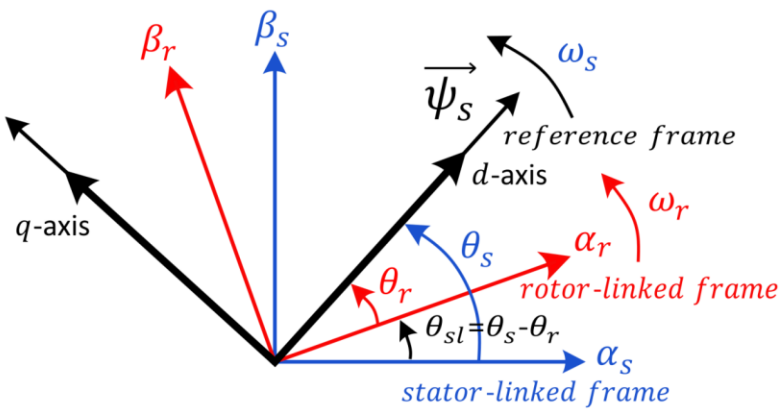

Figure 6.1: Stator Flux Orientation Frames

Definition of the Slip Angle

Slip Angle and Relative Motion Between Fields

- The angular position of the stator flux vector with respect to a stationary reference is denoted by:

$$\theta_s$$

- The angular position of the rotor reference frame is denoted by:

$$\theta_r$$

- The slip angle is defined as the relative angular displacement between these two frames:

$$\theta_{sl} = \theta_s - \theta_r$$

- Taking the time derivative of the slip angle yields the slip angular frequency:

$$\omega_{sl} = \omega_s - \omega_r$$

- The slip angle provides a geometrical interpretation of slip, beyond its definition as a normalized speed difference.

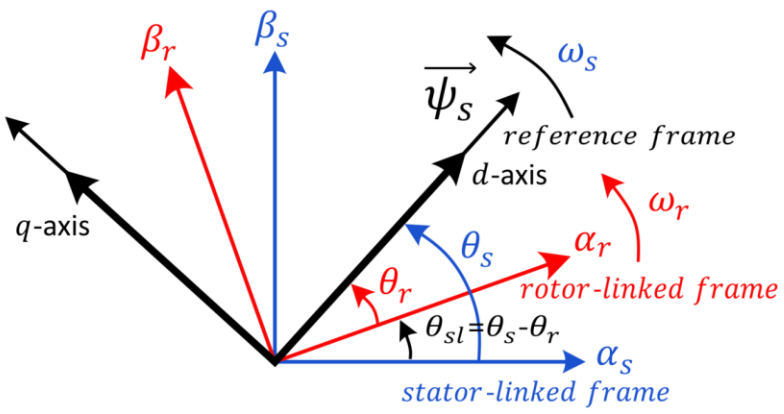

Figure 6.1: Stator Flux Orientation Frames

Stator Flux Orientation Principle

Orientation of the Synchronous Reference Frame

- In Stator-Flux-Oriented Control (SFO), the synchronous dq reference frame is aligned with the stator flux vector:
  - the d-axis is aligned with $\overrightarrow{\psi_s}$,
  - the q-axis is orthogonal to $\overrightarrow{\psi_s}$.

- Under this orientation:

$$\psi_{sq} = 0, \qquad \psi_{sd} = \|\overrightarrow{\psi_s}\|$$

- This alignment is not arbitrary:
  - the stator flux is largely imposed by the grid,
  - it provides a stable electrical reference,
  - and it minimizes sensitivity to stator voltage disturbances.

- The synchronous frame therefore becomes the natural frame for machine control.

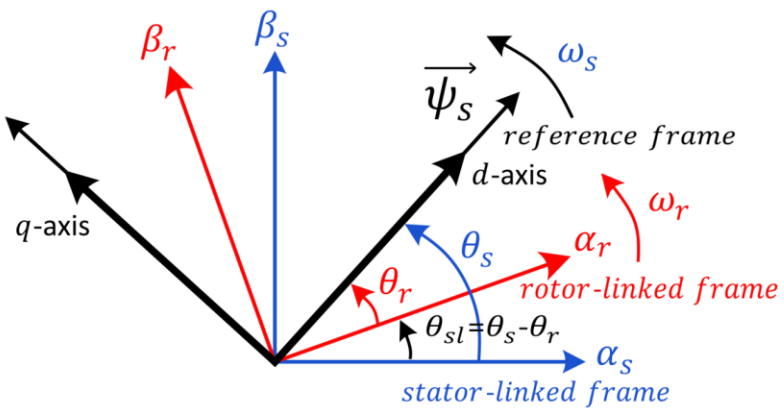

Figure 6.1: Stator Flux Orientation Frames

Control Hierarchy Based on Reference Frames

Reference Frame Selection for RSC and GSC

- The back-to-back converter of the DFIG consists of two converters with distinct physical and control roles:
  - the **Rotor-Side Converter (RSC)** directly controls the electrical machine,
  - the **Grid-Side Converter (GSC)** interfaces the DC-link with the electrical grid.

To achieve natural decoupling and simplify control design, different synchronous reference frames are used:

- **RSC control** is implemented in a synchronous dq reference frame:
  - aligned with the **stator flux vector**,
  - enabling direct control of electromagnetic torque and stator reactive power.
- **GSC control** is implemented in a synchronous dq reference frame:
  - aligned with the **grid voltage vector**,
  - enabling decoupled control of DC-link voltage and grid-side reactive power.

- This choice of reference frames reflects the **physical role of each converter** and minimizes interaction between machine control and grid control.

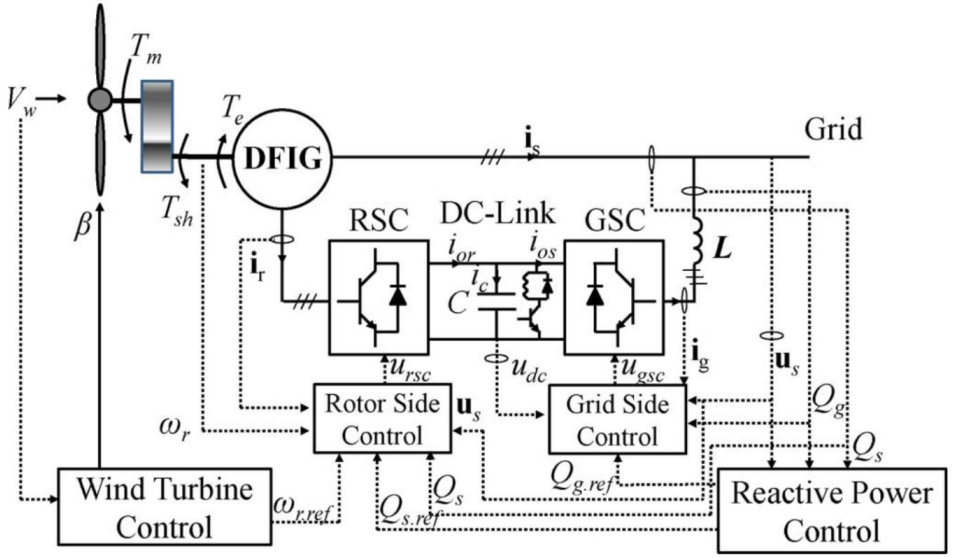

Figure 3.4. Schematic diagram of a DFIG WT system in [4]

Hierarchical Organization of the SFOC Control System

Hierarchical Coordination Between Converters and Control Loops

- The SFOC control system is organized hierarchically according to dynamic time scales and control objectives.
- **Fast inner control loops:**
  - Rotor current control in the d and q axes (RSC),
  - Grid current control in the d and q axes (GSC).
- **Intermediate control loops:**
  - Electromagnetic torque and rotor speed control,
  - Reactive power or magnetization control.
- **Supervisory level:**
  - Reference generation based on wind turbine operation,
  - Maximum Power Point Tracking (MPPT),
  - Operating mode coordination and limitations.
- The **DC-link capacitor** provides energy buffering and enforces coordination:
  - the RSC defines the generated active power,
  - the GSC transfers this power to the grid while maintaining DC-link voltage stability.
- This hierarchical structure provides a **systematic framework** for simulation, controller tuning, and extension to advanced functions such as LVRT.

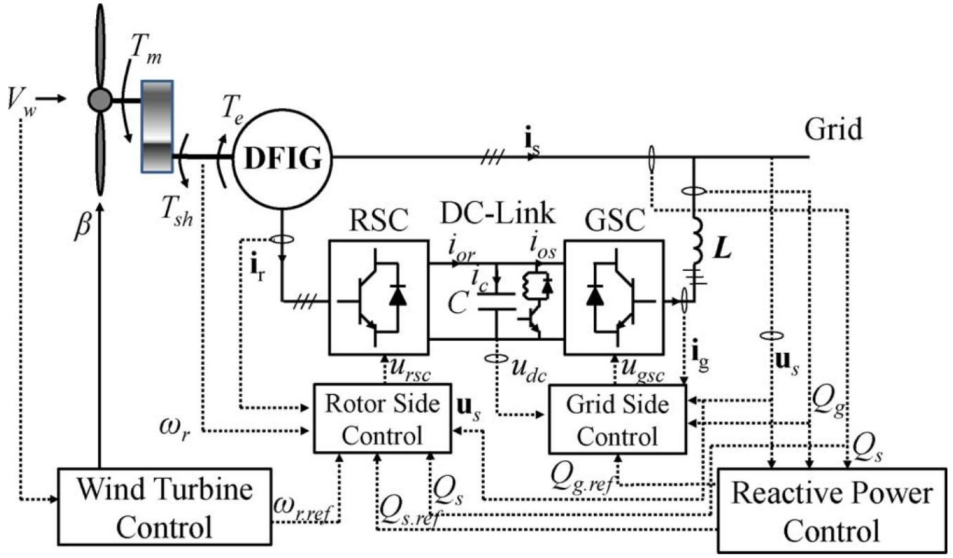

Figure 3.4. Schematic diagram of a DFIG WT system in [4]

Rotor Side Converter (RSC) Control

RSC Control Hierarchy

Rotor Side Converter Control Structure

- The Rotor-Side Converter (RSC) is responsible for controlling the electromagnetic behavior of the DFIG.
- Under SFOC:
  - the **d-axis** is associated with magnetization and reactive power,
  - the **q-axis** is associated with electromagnetic torque and active power.
- The hierarchy of the RSC control system is organized as:
  - **Inner control loops:**
    - rotor current control in the d and q axes (i_{rd}, i_{rq})
  - **Outer control loops:**
    - torque or speed control (via i_{rq}),
    - reactive power or magnetization control (via i_{rd}).
  - **Supervisory level:**
    - generation of speed or power references (e.g. MPPT).
- This hierarchical structure enables **fast electrical control**, while slower mechanical and energy-management loops act on stabilized inner dynamics.

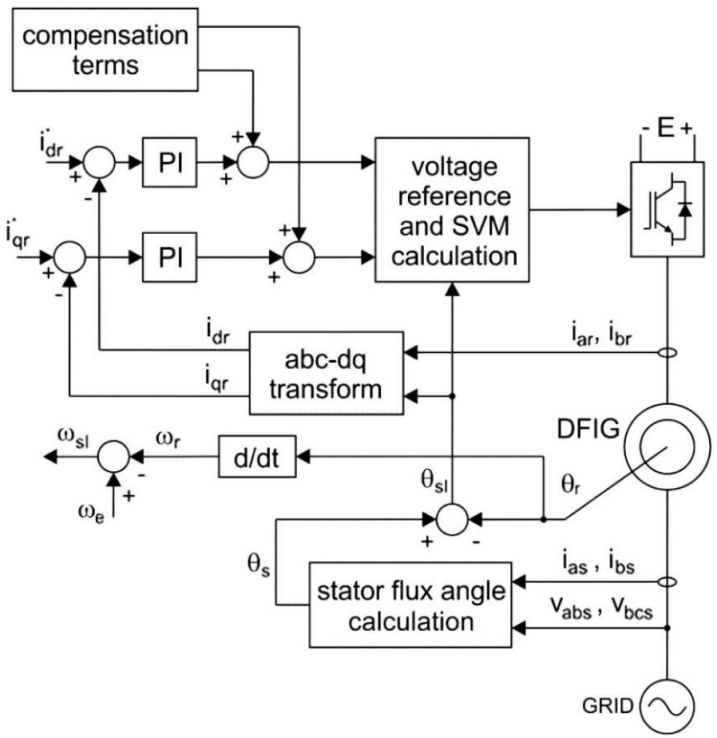

Figure 4.1: Control schematic of a DFIG (RSC) in [5]

Rotor Side Converter (RSC) Control

Stator Flux Estimation

Estimation of the Stator Flux Vector

- Stator-flux-oriented control requires an estimate of the stator flux vector:

$$\overrightarrow{\psi_s}$$

- The stator flux can be reconstructed by integrating the stator voltage equation in the $\alpha\beta$ reference frame:

$$\vec{v}_{s,\alpha\beta} = R_s \vec{\imath}_{s,\alpha\beta} + \frac{d\vec{\psi}_{s,\alpha\beta}}{dt}$$

- Rearranging yields the flux estimator:

$$\vec{\psi}_{s,\alpha\beta} = \int \left(\vec{v}_{s,\alpha\beta} - R_s \vec{\imath}_{s,\alpha\beta}\right) dt$$

- In practice:
  - stator voltages and currents are measured,
  - resistive voltage drop is compensated,
  - numerical integration is performed.

- The estimated stator flux is used to:
  - generate the synchronous reference frame,
  - compute the stator flux angle θ_s,
  - enable decoupled control in SFOC.

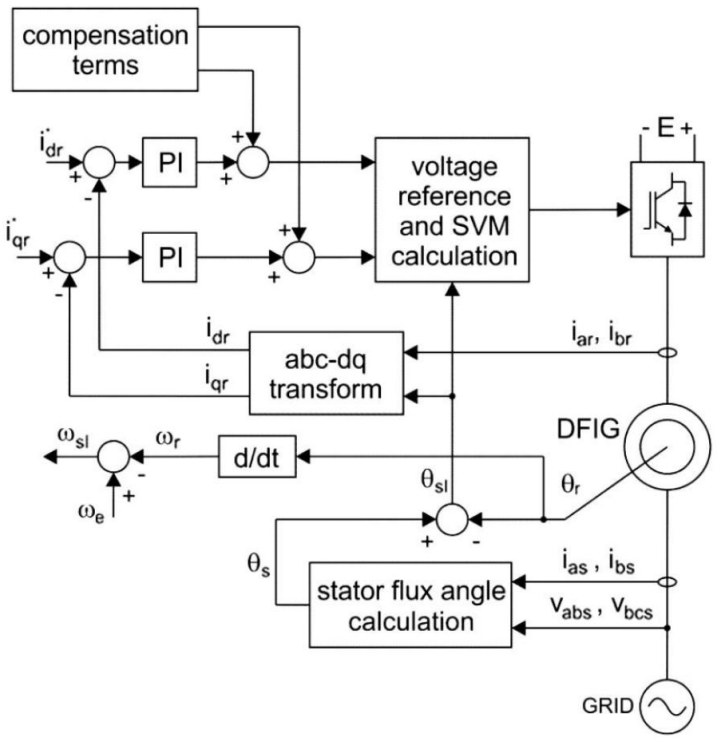

Figure 4.1: Control schematic of a DFIG (RSC) in [5]

Rotor Side Converter (RSC) Control

Measurement Acquisition and Reference Frame Generation

Signal Processing and Angle Generation

- The RSC control system requires measurement of:
  - stator three-phase voltages v_{sa}, v_{sb}, v_{sc},
  - stator three-phase currents i_{sa}, i_{sb}, i_{sc},
  - rotor three-phase currents i_{ra}, i_{rb}, i_{rc},
  - rotor mechanical speed and/or angular position.
- The measured stator and rotor currents are transformed as:
  - $abc \rightarrow \alpha\beta$ (Clarke),
  - $\alpha\beta \rightarrow dq$ (Park).
- The Park transformation requires:
  - the **stator flux angle** θ_s, obtained from a PLL or flux estimator,
  - the **rotor electrical angle** θ_r, obtained from the rotor position sensor.
- The **slip angle** is computed as:

$$\theta_{sl} = \theta_s - \theta_r$$

- These angles are essential for:
  - dq current control,
  - feed-forward compensation terms,
  - correct implementation of the RSC voltage equations.

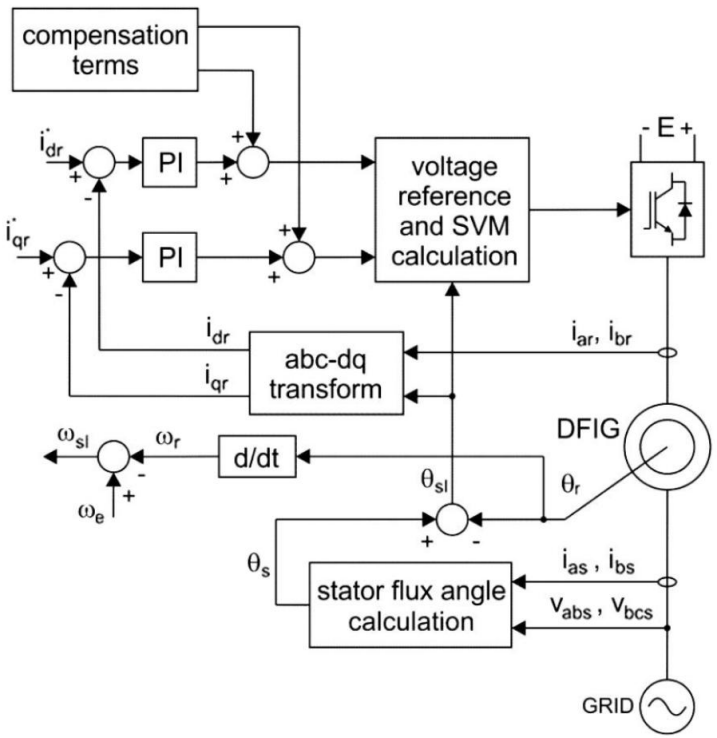

Figure 4.1: Control schematic of a DFIG (RSC) in [5]

Rotor Side Converter (RSC) Control

Rotor Current Control (Dynamic Model)

Rotor Voltage Model in the SFO Reference Frame

- The rotor current control is designed based on the dq rotor voltage equation, derived in Chapter 5:

$$\vec{v}_{r,dq} = \sigma L_r \frac{d\vec{i}_{r,dq}}{dt} + \left(R_r + \frac{L_m^2 R_s}{L_s^2}\right)\vec{i}_{r,dq} + \frac{L_m}{L_s}\vec{v}_{s,dq} - \frac{L_m}{L_s}\left(\frac{R_s}{L_s}I - \omega_e J\right)\vec{\psi}_{s,dq} - \omega_{sl} J\left(\frac{L_m}{L_s}\vec{\psi}_{s,dq} + \sigma L_r \vec{i}_{r,dq}\right)$$

where,

$$I = \begin{bmatrix} 1 & 0 \\ 0 & 1 \end{bmatrix} \quad \& \quad J = \begin{bmatrix} 0 & 1 \\ -1 & 0 \end{bmatrix}$$

- This equation reveals that rotor current dynamics:
  - behave approximately as a first-order RL system,
  - include cross-coupling terms proportional to the slip frequency,
  - are influenced by stator-flux-related terms.

- For control design, the rotor circuit is typically approximated as:

$$G_p(s) = \frac{I(s)}{V_{\mathsf{PI}}(s)} = \frac{1}{L_{\sigma r} s + R'}, \qquad L_{\sigma r} = \sigma L_r \quad \& \quad R' = R_r + \frac{L_m^2 R_s}{L_s^2}$$

- Cross-coupling and stator-flux-dependent terms are compensated using feed-forward decoupling.

Rotor Side Converter (RSC) Control

Decoupled Rotor Current Control Structure

Inner Current Control Loops

- With feed-forward compensation, the d and q axis rotor current dynamics can be controlled independently.
- The control law for each axis takes the form:

$$v_{r,d} = R' i_{r,d} + L_{\sigma r}\frac{di_{r,d}}{dt} + v_{r,d}^{ff} \quad , \qquad v_{PI,rd} = v_{r,d} - v_{r,d}^{ff}$$

$$v_{r,q} = R' i_{r,q} + L_{\sigma r}\frac{di_{r,q}}{dt} + v_{r,q}^{ff} \quad , \qquad v_{PI,rq} = v_{r,q} - v_{r,q}^{ff}$$

- The ff-terms are explicitly shown below. Due to the simplicity of the control scheme and their low significance, it is common to neglect all terms except those involving cross-couplings [7] (shown in bold):

$$v_{r,d}^{ff} = +\frac{L_m}{L_s}v_{s,d} - \frac{L_m}{L_s}\frac{R_s}{L_s}\psi_{s,d} + \frac{L_m}{L_s}\omega_e\psi_{s,q} \boldsymbol{-\omega_{sl}\left(\frac{L_m}{L_s}\psi_{s,q} + \sigma L_r i_{r,q}\right)}$$

$$v_{r,q}^{ff} = +\frac{L_m}{L_s}v_{s,q} - \frac{L_m}{L_s}\frac{R_s}{L_s}\psi_{s,q} - \frac{L_m}{L_s}\omega_e\psi_{s,d} \boldsymbol{+\omega_{sl}\left(\frac{L_m}{L_s}\psi_{s,d} + \sigma L_r i_{r,d}\right)}$$

- The structure of these controllers, including feedforward terms for decoupling, is shown in Figure 6.2:

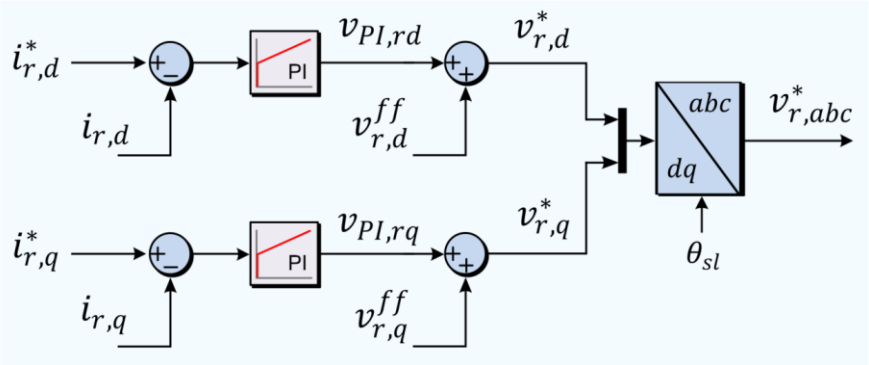

Figure 6.2: Decoupled Rotor Current Control Scheme.

Rotor Side Converter (RSC) Control

Tuning of the Rotor Current PI Controllers

Design and Tuning of Inner Current Loops

- After feed-forward decoupling, the rotor current dynamics in each axis can be approximated by a first-order system:

$$G_p(s) = \frac{I(s)}{V_{\text{PI}}(s)} = \frac{1}{L_{\sigma r}s + R'}$$

- The rotor current controller is implemented as a PI controller:

$$C(s) = K_p + \frac{K_i}{s}$$

- To obtain a first-order closed-loop behavior with bandwidth ω_c, the controller gains are selected as:

$$\frac{K_i}{K_p} = \frac{R'}{L_{\sigma r}}, \qquad K_p = \omega_c L_{\sigma r}, \qquad K_i = \omega_c R'$$

- With these gains, the closed-loop transfer function becomes approximately:

$$\frac{I(s)}{I^*(s)} \approx \frac{\omega_c}{s + \omega_c}$$

- The current control bandwidth ω_c is chosen:
  - sufficiently high to track fast references,
  - but well below the switching frequency,
  - and significantly faster than outer speed and power control loops.

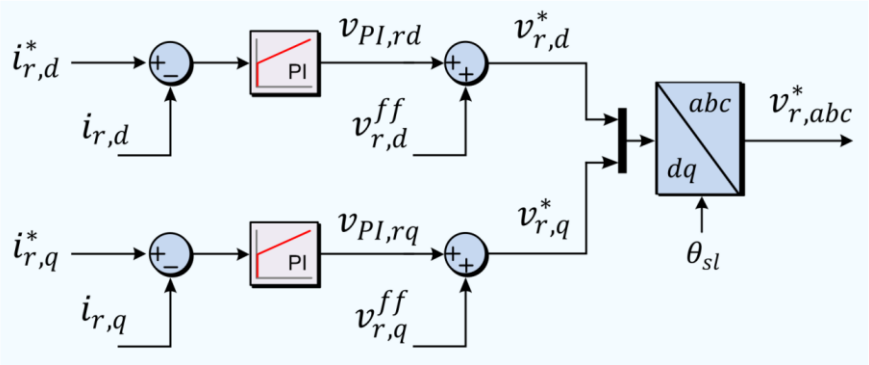

Figure 6.2: Decoupled Rotor Current Control Scheme.

Rotor Side Converter (RSC) Control

Speed Control: Dynamic Model and Torque Generation

Rotor Speed Control in SFOC

- Rotor speed control is implemented as an outer loop around the inner current controllers.
- The speed controller generates a torque reference T_e^*, which is then converted into a rotor q-axis current reference.
- The mechanical dynamics of the DFIG are approximated by:

$$\frac{J_{\text{rot}}}{\rho}\dot{\omega} = J_{\text{tot}}\dot{\omega} = T_e - T_{\text{wind}}$$

- Under stator-flux-oriented (SFO) control, the following conditions hold:

$$\psi_{sd} = L_s i_{sd} + L_m i_{rd}, \qquad \psi_{sq} = 0$$

- From the flux linkage relationships:

$$0 = L_s i_{sq} + L_m i_{rq} \;\Rightarrow\; i_{sq} = -\frac{L_m}{L_s} i_{rq}$$

- The electromagnetic torque can therefore be expressed as:

$$T_e = \frac{3}{2} p \psi_{sd} i_{sq} = \frac{3}{2} p \frac{L_m^2}{L_s} i_m i_{rq}, \qquad i_m = \frac{\psi_{sd}}{L_m}$$

Rotor Side Converter (RSC) Control

Speed Controller and Current Reference Generation

Speed PI Controller and Torque–Current Conversion

- The speed PI controller acts on the speed error: $e_\omega = \omega^* - \omega$

$$T_e^* = K_{p,\omega} e_\omega + K_{i,\omega} \int e_\omega \, dt - K_{ad}(\omega - \omega^*)$$

- The additional proportional term K_{ad} acts as a damping term and improves robustness against aerodynamic torque variations. Usually is fixed as a fraction of $K_{p,\omega}$.
- The conversion from torque reference to rotor q-axis current reference is performed using:

$$i_{rq}^* = \frac{T_e^*}{\frac{3}{2} p \frac{L_m}{L_s} \psi_{sd}}$$

- To respect time-scale hierarchy:

$$\omega_{c,\,current} \gg \omega_{c,\omega}$$

- Assuming second-order dynamics tunning, the speed PI gains are selected as:

$$K_{p,\omega} = 2\xi_\omega \omega_{c,\omega} J_{tot} \quad , \qquad K_{i,\omega} = {\omega_{c,\omega}}^2 J_{tot}$$

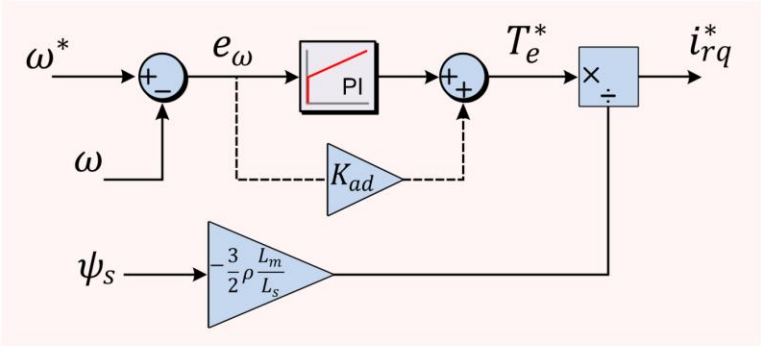

Figure 6.3: Speed Control Scheme

Rotor Side Converter (RSC) Control

Reactive Power Control

Stator Reactive Power Regulation

- From the measured quantities v_{sdq} and i_{sdq}, the stator reactive power is computed.
- Under SFO and assuming small stator resistance:

$$Q \approx \frac{3}{2}\omega_e \psi_{sd} i_{sd}, \qquad \psi_{sd} = L_m i_m$$

- The relationship between stator and rotor currents is given by:

$$i_m = i_{rd} + \frac{L_s}{L_m} i_{sd} \;\Rightarrow\; i_{sd} = \frac{L_m}{L_s}\left(i_m - i_{rd}\right)$$

- Substituting into the reactive power expression yields:

$$Q \approx \frac{3}{2}\omega_e \frac{L_m^2}{L_s} i_m (i_m - i_{rd}) \;\Rightarrow\; i_{rd}^* = i_m^* - \frac{Q^*}{\frac{3}{2}\omega_e \frac{L_m^2}{L_s} i_m}$$

- In practice, the reactive power controller is often simplified to a pure integral controller, with gain:

$$K_{i,Q} = -\frac{\alpha_Q}{\frac{3}{2} V_{g,peak}}$$

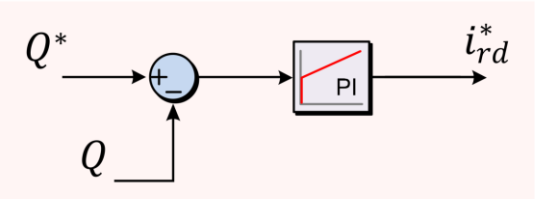

Figure 6.4: Reactive Power Control Scheme

Rotor Side Converter (RSC) Control

Maximum Power Point Tracking (MPPT)

MPPT Objective and Optimal Speed Reference

- The objective of MPPT is to determine the **optimal rotor speed reference $\boldsymbol{\Omega}^*$** that maximizes captured wind power.
- For a given wind speed v and pitch angle β, the optimal operating point is defined by the optimal tip-speed ratio:

$$\lambda^* = \frac{R\,\Omega^*}{v}$$

- This operating point maximizes the **power coefficient** $C_p(\lambda, \beta)$.
- Thanks to torque control through a **partial-scale converter**, the DFIG enables:
  - variable-speed operation,
  - maximum energy capture,
  - without processing the full generator power.
- The MPPT block operates at a supervisory level and provides the speed reference to the speed control loop.

Rotor Side Converter (RSC) Control

Perturb & Observe MPPT Algorithm

P&O MPPT Algorithm

- The Perturb and Observe (P&O) method locally explores power–speed curve **P(Ω).**
- Algorithm logic:
  - perturb the speed reference Ω^*,
  - keep direction if P increases,
  - reverse direction if P decreases.
- Speed reference update law:

$$\Omega^*(k) = \Omega^*(k-1) + d(k)\,\Delta\Omega \qquad \text{where } d(k) \in \{+1, -1\}$$

- The MPPT update rate must be **slower than the speed cont loop**.
- Under SFO control, the speed reference generates a torc reference and the corresponding rotor current:

$$i_{rq}^* = -\frac{T_e^*}{\frac{3}{2}\,p\,\psi_s}$$

- Recommended time-scale separation:

$$\omega_i \gg \omega_c \gg \omega_{\text{MPPT}}$$

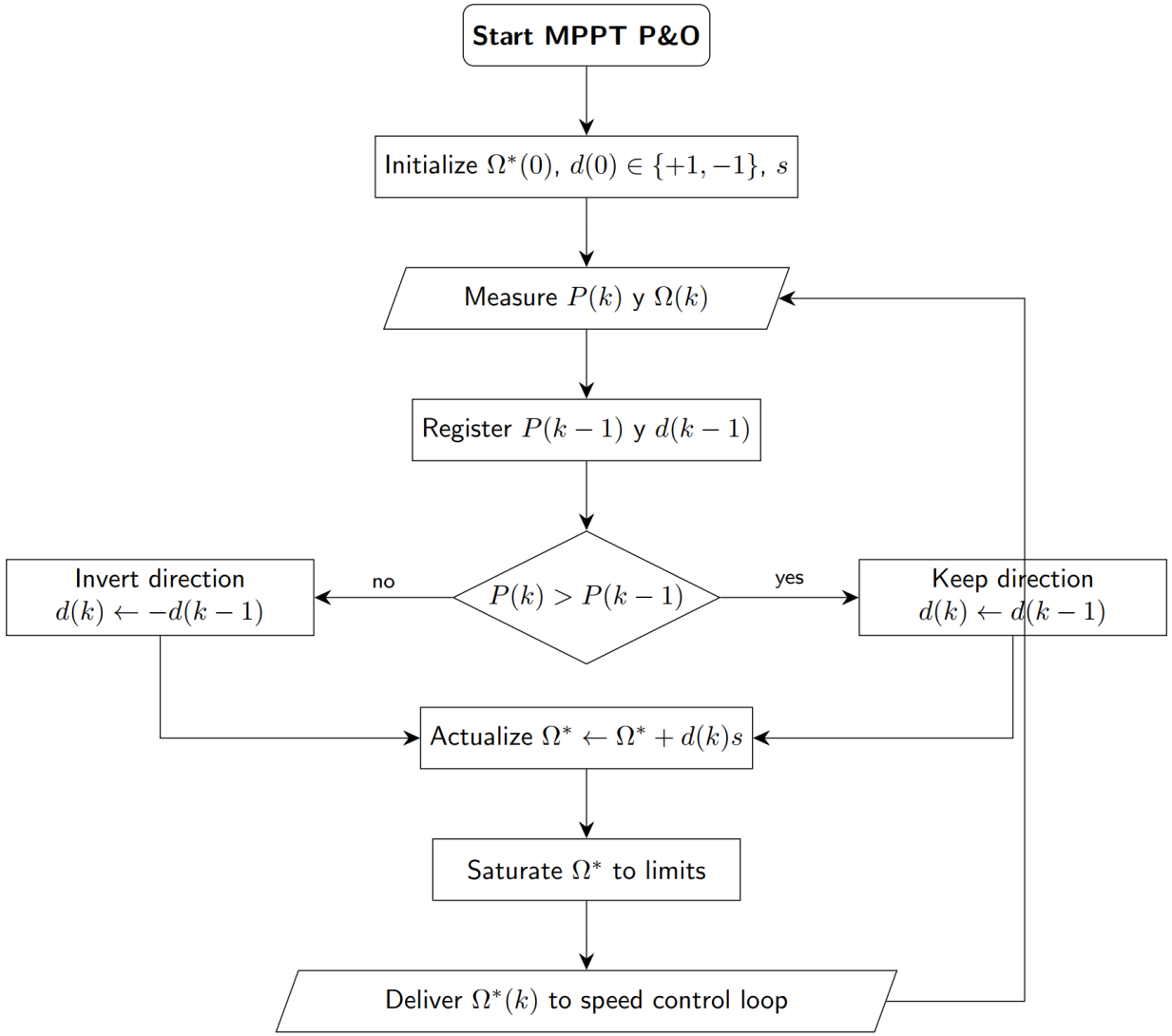

Figure 6.5: MPPT P&O Algorithm for DFIG Wind Turbine

Grid Side Converter (GSC) Control

Grid Side Converter Role and Control Hierarchy

Grid Side Converter (GSC) Control

- The GSC connects the DC-link of the back-to-back converter to the electrical grid.
- From a control perspective, the GSC behaves as a grid-connected voltage source converter (**front-end converter**) with a **floating DC-link**, operating in a **grid-supporting** configuration.
- The GSC does not control the electrical machine directly. Its **role is to regulate** the energy exchanged between **the DC-link and the grid**.

GSC Control Hierarchy

- Control is implemented in a grid-voltage-oriented dq reference frame, yielding natural decoupling:
  - **d-axis** current → DC-link voltage (**active** power),
  - **q-axis** current → grid **reactive** power.
- **Inner loops:** grid current control (i_{gd}, i_{gq})
- **Outer loop:** DC-link voltage control, generating i_{gd}^*

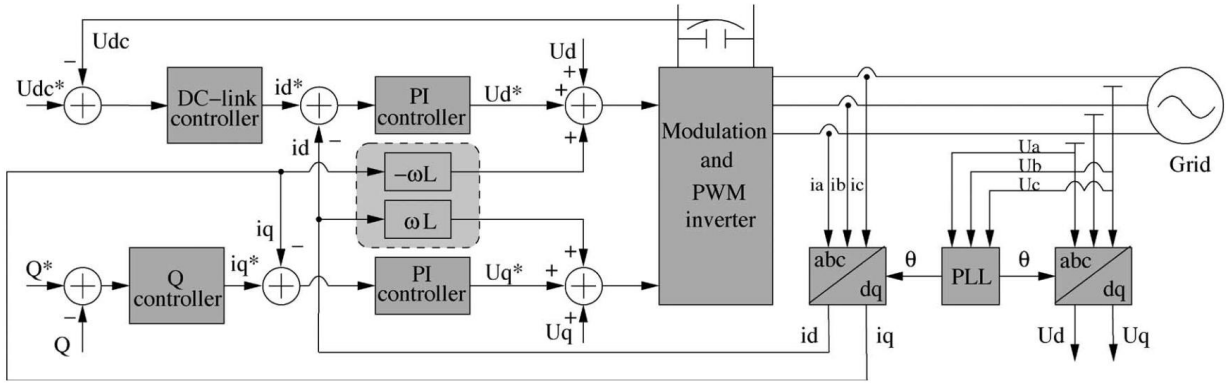

Figure 6.5. General Grid Supporting Control Scheme with Floating DC-Link.

Grid Side Converter (GSC) Control

DC-Link Voltage and Grid-Side Reactive Power Control

DC-Link Voltage Control

- The DC-link capacitor acts as an energy buffer between the rotor-side and grid-side converters.
- The DC-link voltage dynamics are governed by power and current balance:

$$C_{dc}V_{dc}\frac{dV_{dc}}{dt} = P_g - P_{rsc} = \frac{3}{2}\left(v_{gd}i_{gd} + v_{gq}i_{gq}\right) - i_{out,r}V_{dc}$$

$$C_{dc}\frac{dV_{dc}}{dt} = i_{in,g} - i_{out,r} \quad , \qquad i_{in,g} \approx \frac{k \cdot m}{2} i_{gd}$$

- A **PI controller** compares V_{dc} with its reference V_{dc}^* and generates the grid current reference i_{gd}^*, ensuring energy balance in the DC-link.

Reactive Power Control at the Grid Side

- The **grid-side q-axis current** i_{gq} controls the reactive power exchanged with the grid.
- This control is **independent of DC-link voltage regulation**, thanks to grid-voltage orientation.
- In practical operation:
  - $i_{gq}^* = 0$ → **unity power factor operation**,
  - or $i_{gq}^* \neq 0$ → **reactive power support**, if required by grid codes or operating conditions.

Section 7: LVRT Requirements and System-Level Compliance of DFIGs

Double Fed Induction Generator

PONTIFICIA
UNIVERSIDAD
CATÓLICA
DE CHILE

LVRT in DFIG-Based Wind Turbines: Problem Statement

LVRT Requirements and DFIG Sensitivity to Grid Fault

- Modern grid codes require wind turbines to remain connected during voltage disturbances and to actively support grid recovery.
  This capability is known as Low Voltage Ride-Through (LVRT).
- For DFIG-based wind turbines, LVRT represents a critical operating requirement due to the direct stator–grid connection.
- During grid voltage dips, the electrical conditions imposed on the generator differ fundamentally from steady-state vector control assumptions.
- Because the stator is directly connected to the grid:
  - voltage disturbances propagate immediately into the machine,
  - triggering electromagnetic and energetic transients that challenge:
    - rotor-side converter limits,
    - DC-link stability,
    - and controllability.
- These characteristics distinguish the DFIG from full-converter-based generators and explain its particular sensitivity to grid disturbances.

Phenomenology of Grid Voltage Dips in DFIGs

Electromagnetic and Energetic Effects During Voltage Dips

- During a sudden grid voltage dip:
  - the **stator voltage magnitude decreases** almost instantaneously,
  - while the **stator flux cannot change abruptly** due to stored magnetic energy.
- The stator flux during a fault can be decomposed into:
  - a **forced component**, directly related to the reduced grid voltage,
  - a natural (**free-decaying**) component, governed by the stator time constant.
- The decaying natural flux induces a **large electromotive force (EMF)** in the rotor windings:
  - proportional to the flux derivative,
  - and to the relative speed between stator and rotor fields.
- Consequences of the induced rotor EMF include:
  - rapid **rotor current peaks**,
  - **high stress** on the rotor-side converter,
  - **energy transfer into the DC-link**, leading to:
    - DC-link energy accumulation,
    - rapid DC-link voltage rise,
    - potential DC-link overvoltage.
- Under conventional protection schemes (crowbar activation):
  - the DFIG behaves **as a squirrel-cage induction generator**,
  - vector control is disabled and active power control is lost,
  - and the generator **absorbs reactive power from the grid.**

Grid Code LVRT Requirements for Wind Turbines

Grid Code Requirements During Voltage Dips

- The severe electromagnetic phenomena described previously would not, by themselves, justify complex LVRT strategies if wind turbines were allowed to disconnect during grid faults.

- However, **modern grid codes impose increasingly stringent requirements** on renewable generation, particularly regarding **grid support during disturbances**.

- As documented in the literature [3-5], modern grid codes impose **two fundamental obligations** on wind turbines during voltage dips:

  1. **Ride-through obligation**
     Wind turbines must remain connected to the grid for specified voltage–time conditions.
  2. **Grid support obligation**
     Wind turbines must actively support grid recovery, primarily through **controlled reactive power injection**.

- These obligations fundamentally change the control objectives during grid faults.

Voltage Ride-Through and Disconnection Criteria

Voltage–Time Ride-Through Requirements

- Grid codes specify **under which voltage–time conditions** wind turbines:
  - are allowed to disconnect, and
  - must remain connected to the grid.

- These requirements are illustrated by the **voltage–time diagram** shown in Figure 7.1:
  - horizontal axis: fault duration,
  - vertical axis: remaining grid voltage (normalized).

- Four characteristic regions are identified:
  - **Region A:** shallow, short voltage dips → connection mandatory.
  - **Region B:** deeper dips of limited duration → disconnection not permitted, LVRT required.
  - **Region C:** severe and longer dips → very short disconnections may be allowed, fast reconnection required.
  - **Region D:** very deep and long-lasting collapses → disconnection allowed.

- **Key:** The allowed disconnection area is extremely restricted; most practical grid faults require continuous ride-through.

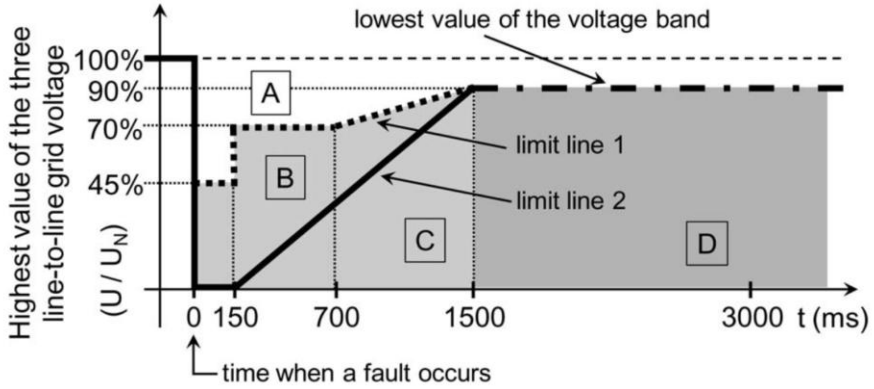

Figure 7.1: Voltage limit curve to allow generator disconnection. [5]

Reactive Current Injection Requirements

Reactive Current Support During Voltage Dips

- Remaining connected during a voltage dip is **no longer sufficient**.
- Modern grid codes require wind turbines to **actively support voltage recovery**, primarily through **reactive current injection**.
- Figure 7.2 relates:
  - the **voltage deviation** during the fault,
  - to the **reactive current** that must be delivered to the grid.
- Key observations:
  - for small voltage deviations, reactive current remains near pre-fault value,
  - as voltage drops increase, required reactive current rises approximately proportionally,
  - for deep voltage dips, grid codes demand **very high capacitive reactive current**, often near rated converter current,
  - a **dead band** is defined around nominal voltage.
- **Important implication:** During severe faults, reactive current delivery has priority over active power injection.

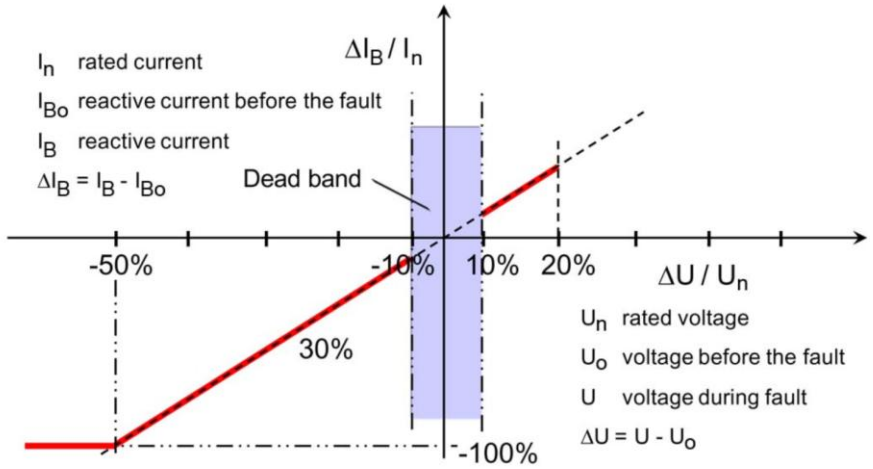

Figure 7.2: Reactive current to be delivered to the grid under a voltage dip. [5]

Consequences of Grid Code Requirements for DFIG Control

Implications for DFIG-Based Wind Turbines

- Reactive current requirements **implicitly constrain active power delivery** during faults:
  - converter current capability is limited,
  - increased reactive current reduces available active current.

- As a result, modern grid codes:
  - allow significant reduction of active power during voltage dips,
  - accept temporary loss of electromagnetic torque,
  - emphasize **controlled recovery of active power after fault clearance**.

- For DFIG-based wind turbines, the combined requirements impose severe constraints:
  - stator is directly exposed to grid voltage dips,
  - large rotor currents and DC-link overvoltages may arise,
  - **simultaneous ride-through and reactive current injection** must be ensured,
  - disconnection is allowed only in exceptional cases.

- Meeting LVRT requirements therefore requires **maintaining control authority over both RSC and GSC throughout the fault event**, motivating advanced LVRT control strategies.

Classical Crowbar-Based LVRT Strategy

DFIG with Crowbar Protection

- Before advanced LVRT strategies, the crowbar protection circuit was the most widely adopted solution to protect DFIGs during grid faults.

- In a crowbar-protected DFIG:
  - a **crowbar circuit** is connected across the rotor windings,
  - a **DC chopper** is used to limit DC-link overvoltage.

- **During a grid fault:**
  - high rotor currents trigger crowbar activation,
  - the RSC is blocked and rotor windings are short-circuited,
  - the DFIG behaves as a **squirrel-cage induction generator**.

- Main limitation:
  - vector control is disabled,
  - reactive power injection cannot be controlled,
  - the generator typically **absorbs reactive power** from the grid.

- Although hardware protection is ensured, **grid support is lost during the most critical phase of the fault**, making this strategy incompatible with modern grid codes.

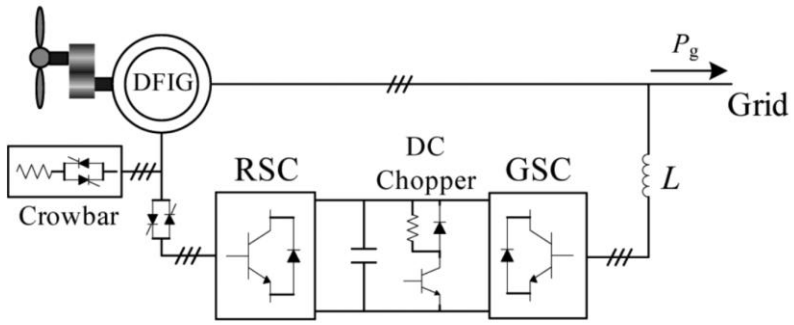

Figure 7.3: DFIG WT with the crowbar and DC chopper protection circuits. [3]

LVRT Enhancement Using a Dynamic Voltage Restorer (DVR)

- The **Dynamic Voltage Restorer (DVR)** is an intermediate LVRT solution based on **external stator voltage compensation**.
- In this configuration:
  - the DVR **is inserted in series between the stator and the grid**,
  - the conventional DFIG back-to-back converter remains unchanged,
  - no modification of the generator itself is required.
- During a grid voltage dip:
  - the DVR injects a **series compensating voltage**,
  - stator terminals experience a voltage close to nominal,
  - stator flux transients are significantly reduced,
  - rotor-induced EMF and rotor current peaks are mitigated.
- As a result, the **internal electromagnetic behavior of the DFIG remains close to normal operation**, preserving controllability during faults.
- **Key drawback:** excellent LVRT performance, but **requires additional hardware**, increasing cost and complexity.

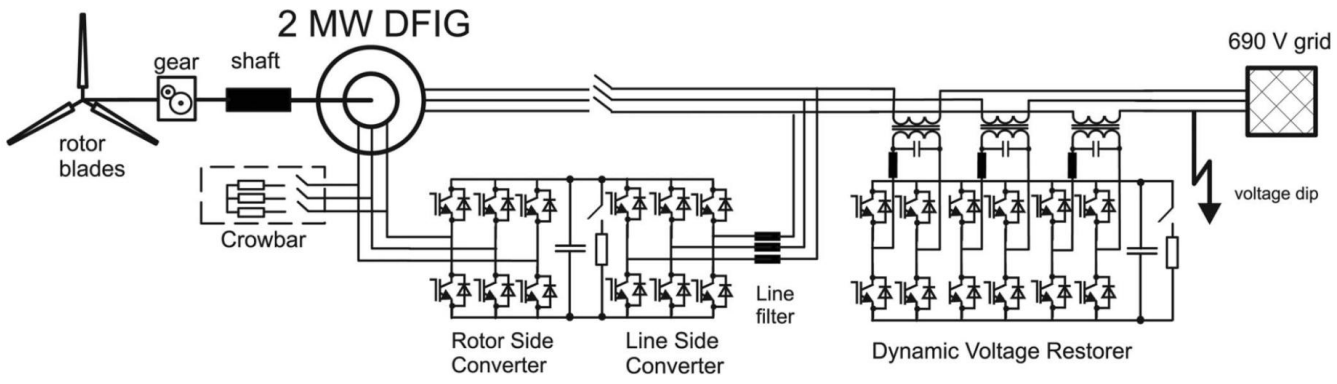

Figure 7.4: Schematic diagram of DFIG wind turbine system with DVR. [2]

Hardware-Free LVRT Strategies: General Concept

Hardware-Free LVRT Based on Converter Control

- In contrast to crowbar-based and DVR-based solutions, **hardware-free LVRT strategies** aim to achieve grid-code compliance **without adding external hardware**.

- These strategies rely exclusively on:
  - modification of **control objectives** during faults,
  - **coordinated** control of the existing **RSC and GSC**.

- The **standard DFIG topology is preserved**:
  - stator directly connected to the grid,
  - rotor connected through the back-to-back converter.

- Two representative and influential hardware-free strategies are reported in the literature:
  - **LVRT by controlled absorption of kinetic energy** [3],
  - **Coordinated reactive power support strategy** [4].

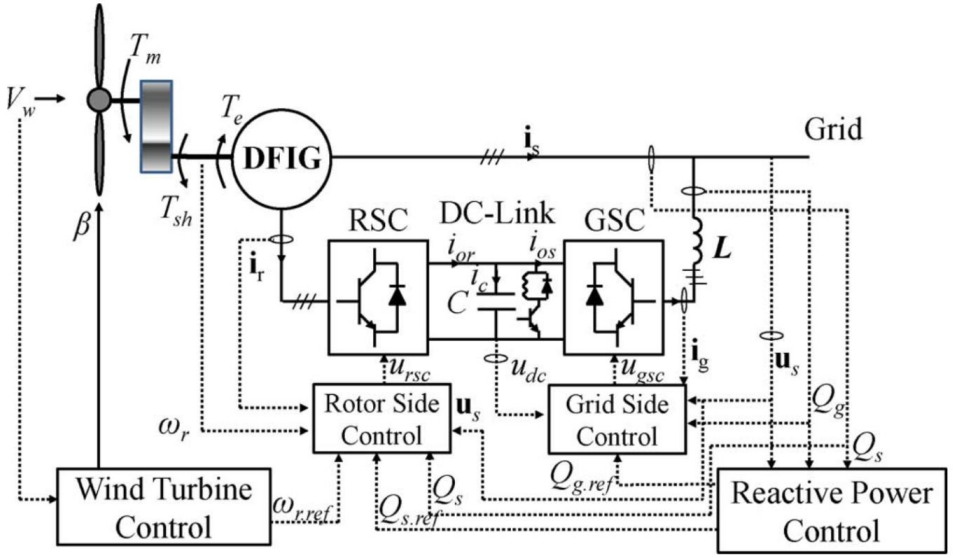

Figure 7.5. Schematic diagram of a DFIG WT system in [4]

LVRT by Controlled Absorption of Kinetic Energy

Kinetic Energy Absorption Strategy

- This strategy is based on the idea of **temporarily storing excess energy** in the mechanical inertia of the turbine–generator set during grid faults.

- When a voltage dip is detected:
  - the **electromagnetic torque reference is reduced to zero**,
  - active power delivered to the grid is intentionally limited,
  - excess mechanical power is absorbed as **kinetic energy**, causing controlled rotor acceleration.

- As illustrated in Figure 7.6:
  - the **control structure remains unchanged**,
  - only references and priorities are modified during faults.

- The **GSC remains active**, maintaining DC-link stability, while the **RSC is not blocked**, avoiding crowbar activation.

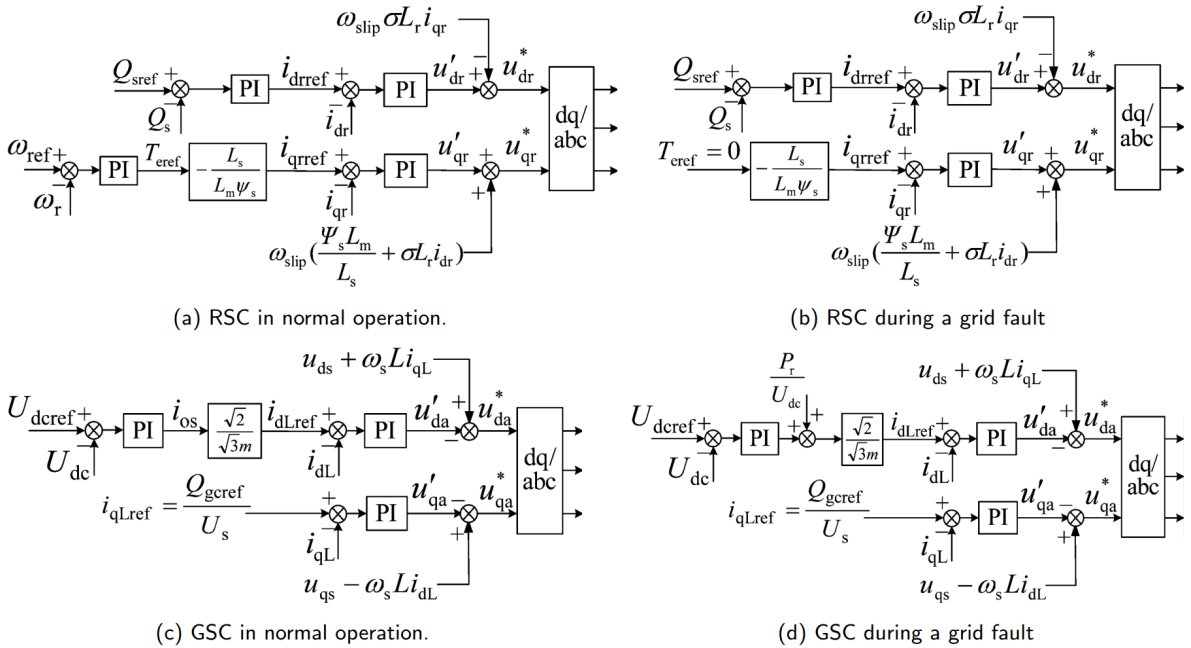

(a) RSC in normal operation.

(b) RSC during a grid fault

(c) GSC in normal operation.

(d) GSC during a grid fault

Figure 7.6: Control schemes of DFIG in [3]

LVRT by Controlled Absorption of Kinetic Energy

Kinetic Energy Absorption Strategy

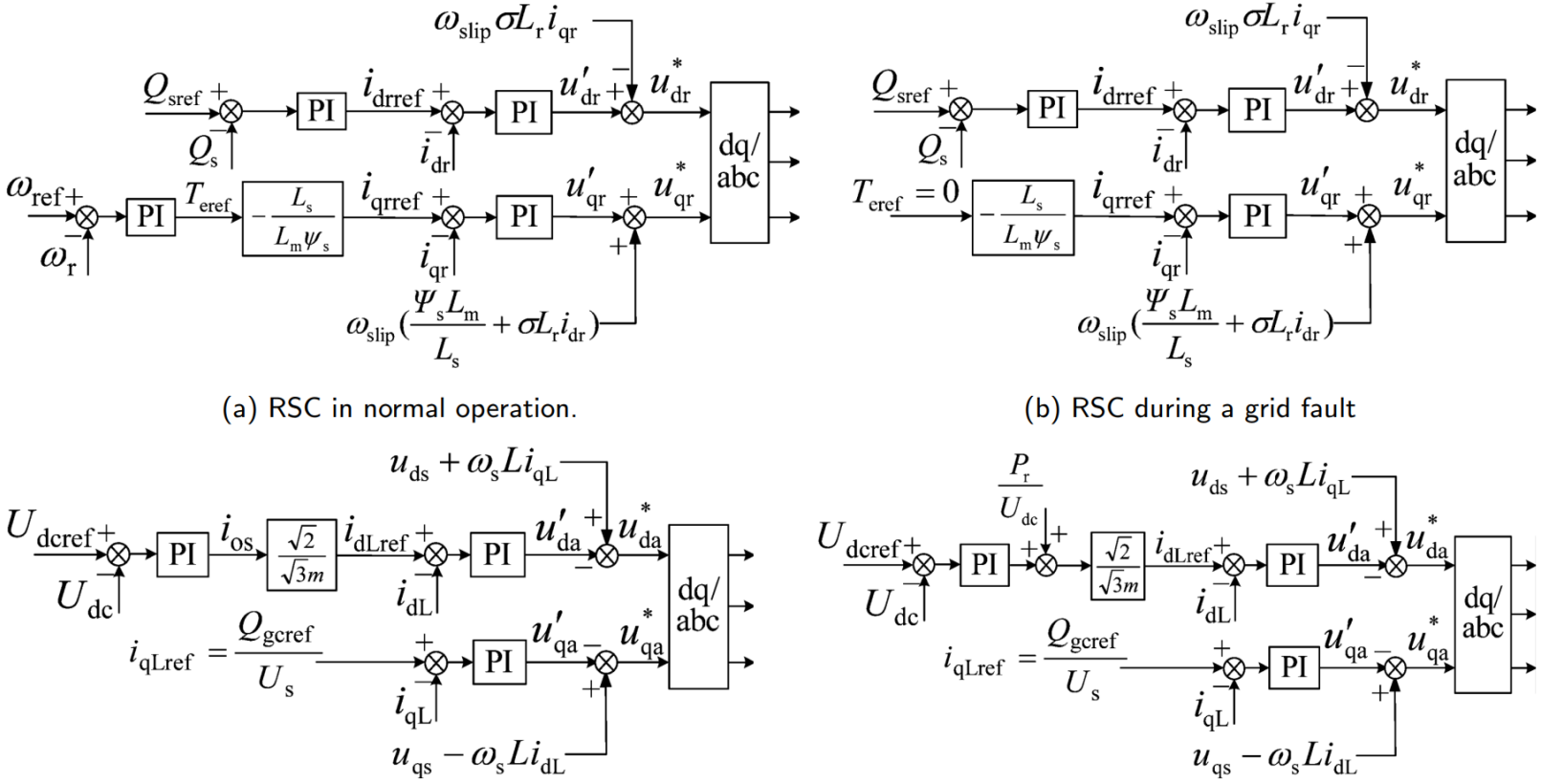

(a) RSC in normal operation.

(b) RSC during a grid fault

(c) GSC in normal operation.

(d) GSC during a grid fault

Figure 7.6: Control schemes of DFIG in [3]

Coordinated Reactive Power Support Strategy

Reactive Power Prioritization During Faults

- This strategy explicitly targets **reactive current injection**, in line with **stringent modern grid codes**.

- During a voltage dip:
  - reactive current references are **rapidly increased**,
  - electromagnetic torque and active power references are reduced,
  - converter current limits are **explicitly managed**.

- Figure 7.7 illustrates:
  - coordinated modification of RSC and GSC control schemes,
  - prioritization of reactive current in both converters.

- After fault clearance:
  - active power and torque are gradually restored,
  - rotor speed and mechanical stress are smoothly stabilized,
  - DC-link voltage remains controlled throughout the transient.

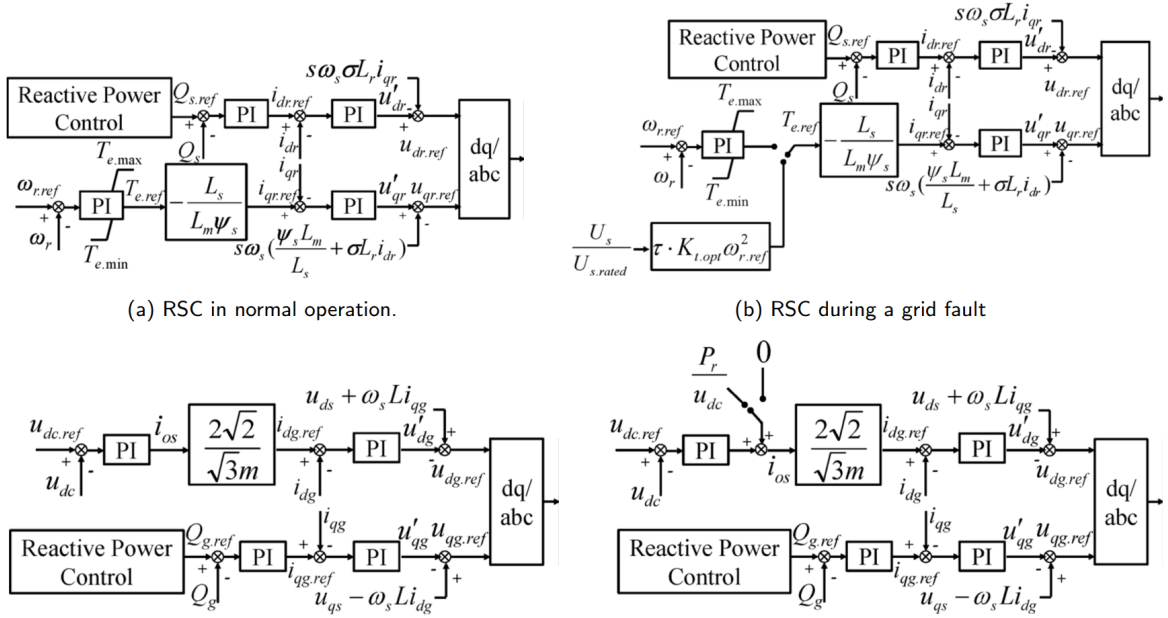

(a) RSC in normal operation.

(b) RSC during a grid fault

(c) GSC in normal operation.

(d) GSC during a grid fault

Figure 7.7: Control schemes of DFIG in [4]

Coordinated Reactive Power Support Strategy

Reactive Power Prioritization During Faults

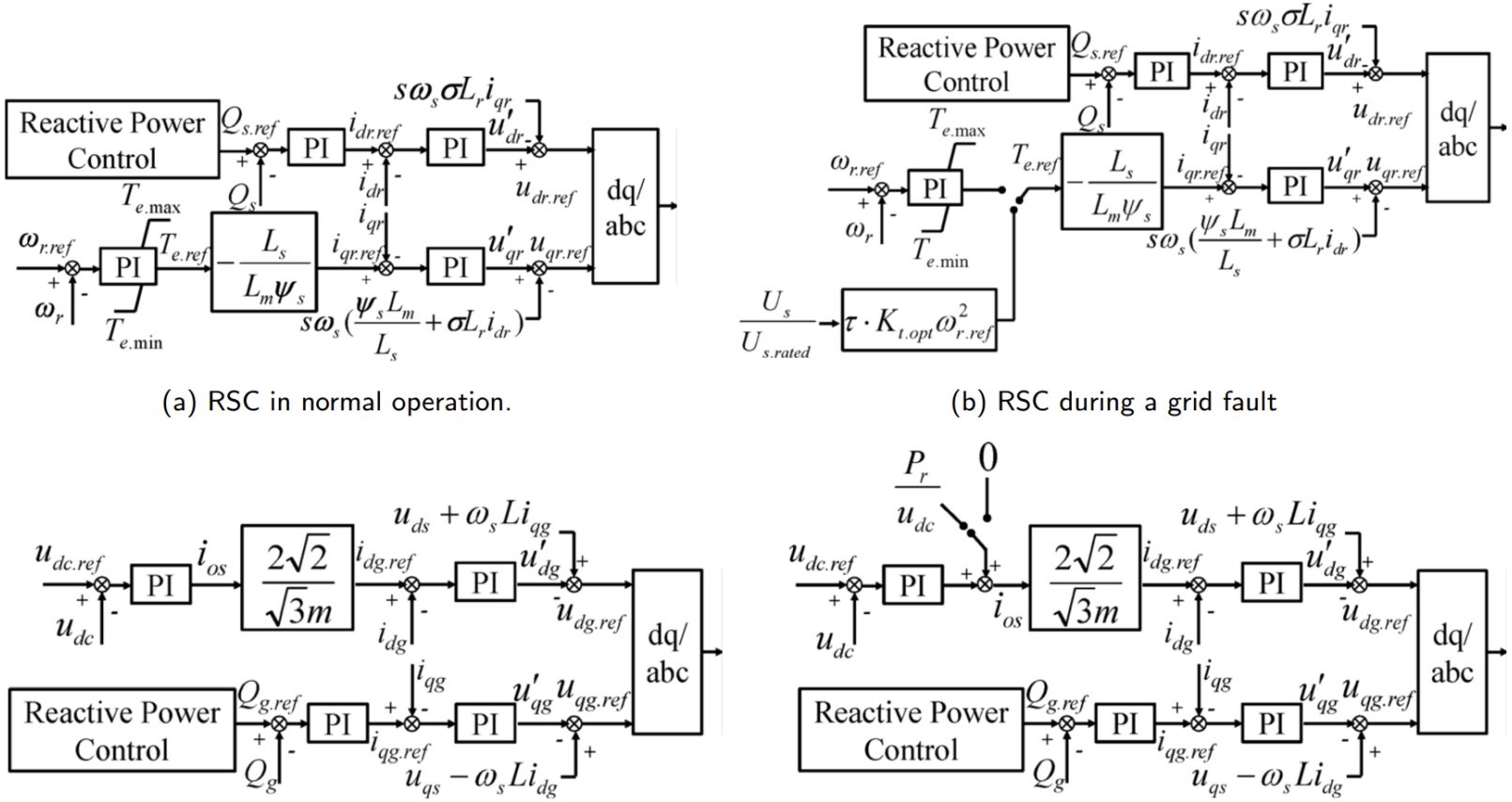

(a) RSC in normal operation.

(b) RSC during a grid fault

(c) GSC in normal operation.

(d) GSC during a grid fault

Figure 7.7: Control schemes of DFIG in [4]

Comparison and LVRT Compliance Summary

Hardware-Free LVRT Strategies: Performance and Compliance

- The three LVRT approaches discussed in this chapter exhibit fundamentally different behavior during grid faults:

Classical crowbar strategy

✓ protects power electronics,
✗ vector control is lost during the fault,
✗ reactive current injection cannot be controlled,
✗ does **not comply with modern LVRT grid-code requirements.**

Kinetic energy absorption strategy

✓ ride-through capability is maintained,
✓ rotor currents and DC-link voltage remain within safe limits,
✗ reactive current injection is **not prioritized,**
✓ suitable for grid codes emphasizing continuity of operation.

Coordinated reactive power support strategy

✓ ride-through is ensured during deep and long voltage dips,
✓ high capacitive reactive current is delivered in proportion to voltage sag,
✓ controllability of both RSC and GSC is preserved,
✓ smooth and controlled post-fault recovery.

LVRT compliance summary:

- Only control-based, coordinated strategies can simultaneously satisfy:
  - ride-through obligations,
  - reactive current injection requirements,
  - DC-link stability,
  - and post-fault recovery constraints.

Key conclusion:

- The coordinated reactive power support strategy provides **the best overall LVRT performance and full compliance with stringent modern grid codes**, without requiring additional hardware.

Presentation references

The 5 selected papers and extras

PONTIFICIA
UNIVERSIDAD
CATÓLICA
DE CHILE

References

[1] J. Ekanayake, L. Holdsworth, X. Wu, and N. Jenkins, “Dynamic modeling of doubly fed induction generator wind turbines,” IEEE Transactions on Power Systems, vol. 18, no. 2, pp. 803–809, 2003.

[2] C. Wessels, F. Gebhardt, and F. W. Fuchs, “Fault ride-through of a dfig wind turbine using a dynamic voltaje restorer during symmetrical and asymmetrical grid faults,” IEEE Transactions on Power Electronics, vol. 26, no. 3, pp. 807–815, 2011.

[3] L. Yang, Z. Xu, J. Ostergaard, Z. Y. Dong, and K. P. Wong, “Advanced control strategy of dfig wind turbines for power system fault ride through,” IEEE Transactions on Power Systems, vol. 27, no. 2, pp. 713–722, 2012.

[4] D. Xie, Z. Xu, L. Yang, J. Østergaard, Y. Xue, and K. P. Wong, “A comprehensive lvrt control strategy for dfig wind turbines with enhanced reactive power support,” IEEE Transactions on Power Systems, vol. 28, no. 3, pp. 3302–3310, 2013.

[5] R. Cardenas, R. Pena, S. Alepuz, and G. Asher, “Overview of control systems for the operation of dfigs in wind energy applications,” IEEE Transactions on Industrial Electronics, vol. 60, no. 7, pp. 2776–2798, 2013.

[6] Lamnow. (2025, Sep.) Wind turbines with doubly-fed generator. Accessed: 2026-03-20. [Online]. Available: https://lamnow.com/wind-turbines-with-doubly-fed-generator/

[7] A. Stampbach. (2024, Jun.) Dfig (doubly-fed induction generator) control for wind turbines. imperix. Technical Note. Accessed: 2026-03-20. [Online]. Available: https://imperix.com/doc/implementation/dfig-generator-control-for-wind-turbines

[8] ABB. Doubly-fed generators. ABB. Accessed: 2026-03-20. [Online]. Available: https://www.abb.com/global/en/areas/motion/motors-generators/generators/generators-for-renewables/doubly-fed-generators

[9] Plexim GmbH. Application example 282. Plexim. Accessed: 2026-03-20. [Online]. Available: https://www.plexim.com/support/application-examples/282

POWER & ENERGY CONVERSION LABORATORY

Department of Electrical Engineering
Pontificia Universidad Católica de Chile
peclab.ing.uc.cl