# BBC micro:bit - Electronics

Steve Case

# BBC Micro:bit v2

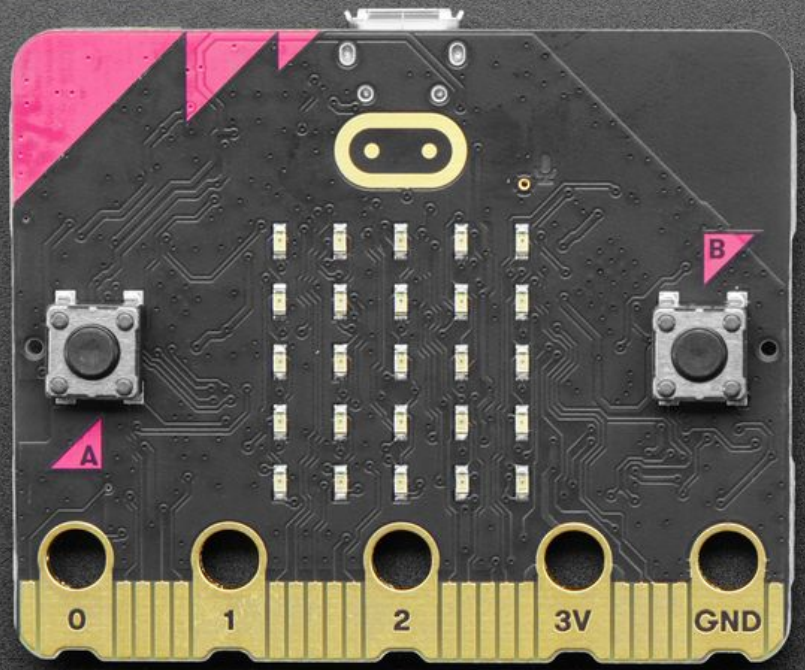


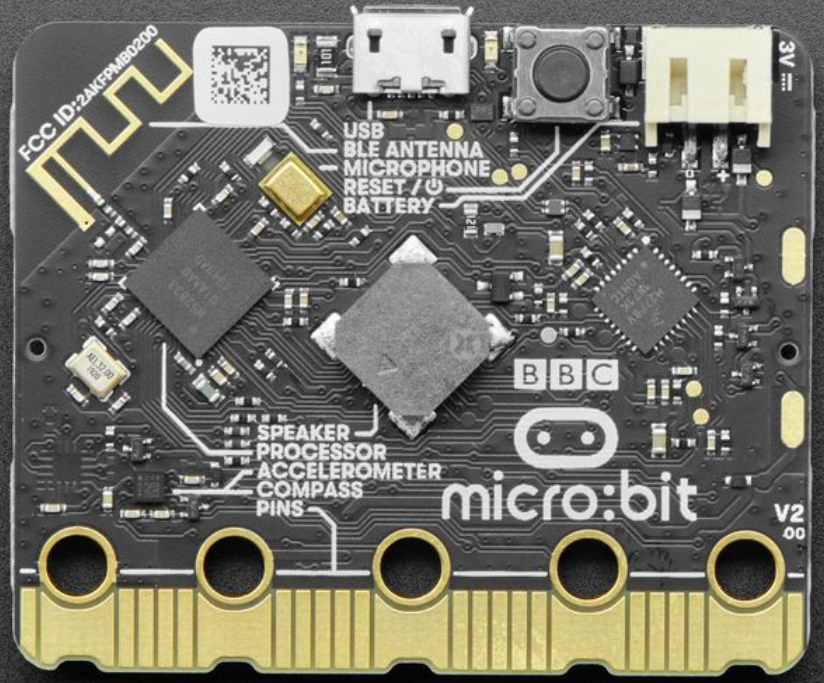

# BBC micro:bit v2

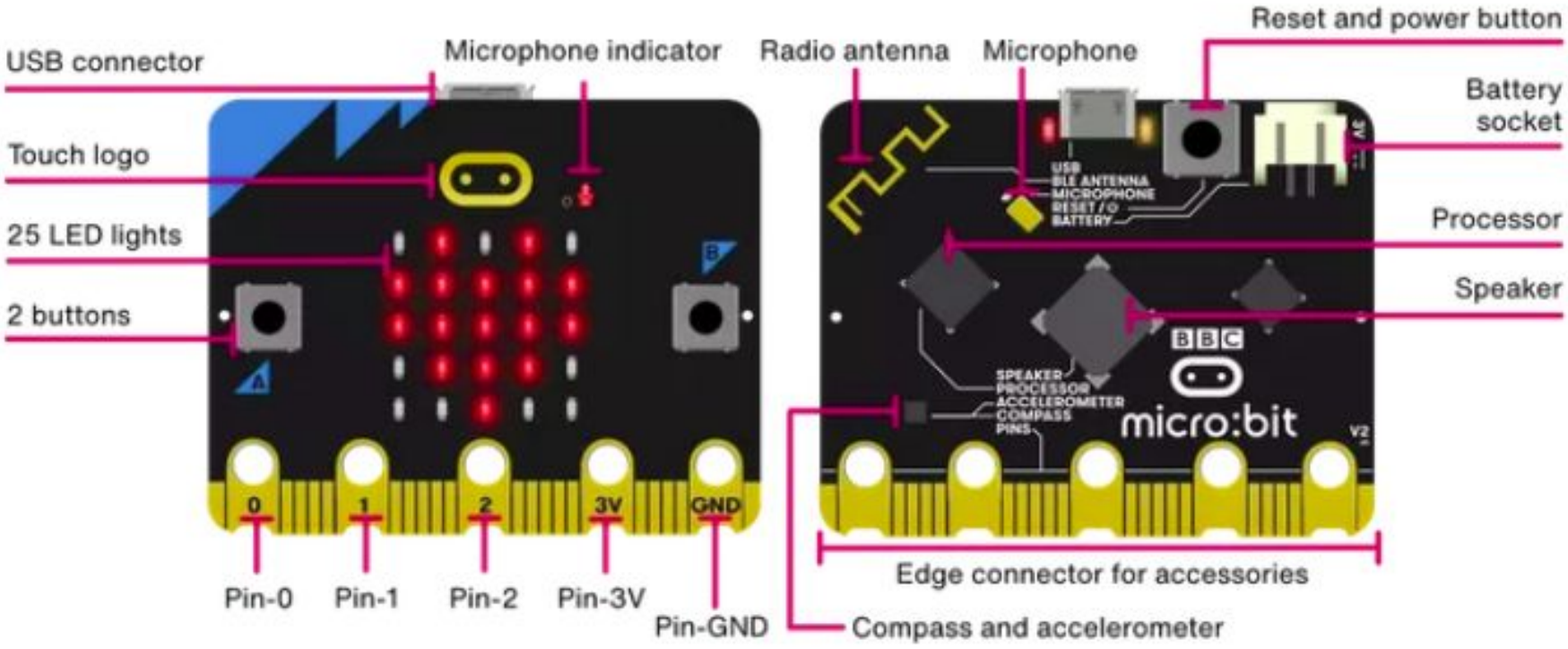

# Micro:bit battery connection

- Two AA cells provide 3V
- When connected to PC, USB provides 5V
- The microbit turns the 5V into 3.3V with a regulator chip

# Micro:bit computer connection

- Turn PC on first
- Connect micro:bit to the PC
- USB data cable required. Some cables are for charging only.
- The batteries cannot be charged with the PC or micro:bit.
- There is no charging circuit on the microbit
- There is no on/off switch.

# Micro:bit speaker connection

- Using alligator clips connect 3.5mm connector (top image)
- Use pads GND and 0 for the speaker connection.
- Small speakers work ok.
- Larger speakers will be hard to hear as the microbit has limited power.
- V2 has a built-in speaker and microphone

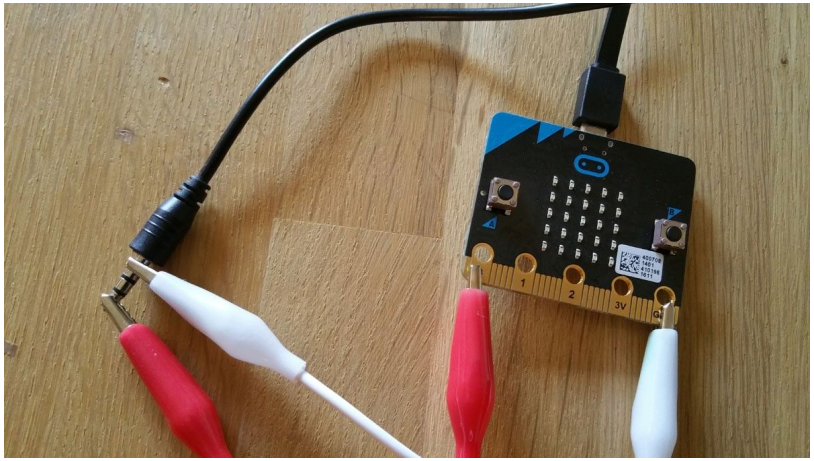

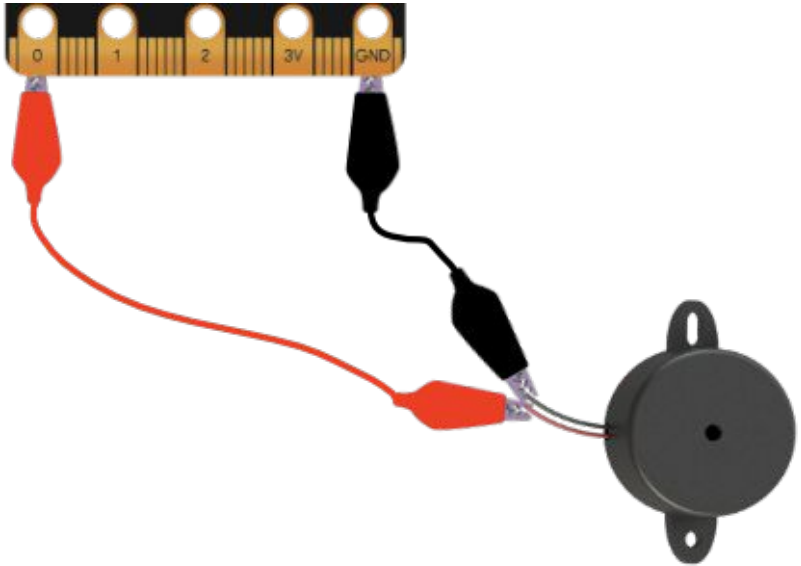

# music1.py

```
from microbit import *
import music

while True:
    if button_a.is_pressed():
        display.show(Image.HAPPY)
        music.play(music.PYTHON)
    elif button_b.is_pressed():
        display.show(Image.SAD)
        music.play(music.FUNERAL)
    display.clear()

    if button_a.is_pressed():
        display.show(Image.HAPPY)
    elif button_b.is_pressed():
        display.show(Image.SAD)
    display.clear()
```

# Micro:bit LED connection

- Using alligator clips connect to each leg of the LED.
- One leg of the LED will have a resistor.
- Use pads GND and 0 for the LED connection.
- If it does not work, reverse your clips to GND and 0.

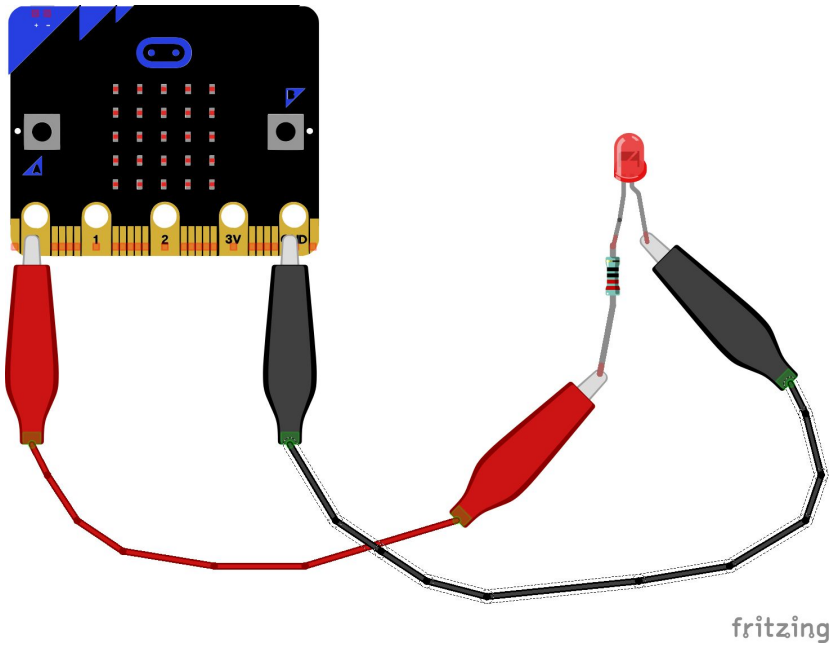

# blink.py

```
from microbit import *



while True:
    pin0.digital_write(1)
    sleep(1000)
    pin0.digital_write(0)
    sleep(1000)
```

# BBC micro:bit

## Other Topics

- The microbit is based on Micropython.
-

# Reference material

Adafruit Industries: www.adafruit.com
Gemma M0 learning: www.learn.adafruit.com/adafruit-gemma-m0?view=all

Sparkfun electronics: www.sparkfun.com

Mu-Editor Installation:
https://codewith.mu/en/download

Seminar Slides:
https://docs.google.com/presentation/d/1-rhsECbdl-_QQHVEifSHUANQlVRY3bAzd5QX7KLlMLc/edit?usp=sharing

Python:
https://www.w3schools.com/python/default.asp
https://www.python.org/ (advanced full reference for Python)
https://wiki.python.org/moin/BeginnersGuide (still pretty advanced)

Electronics basics videos