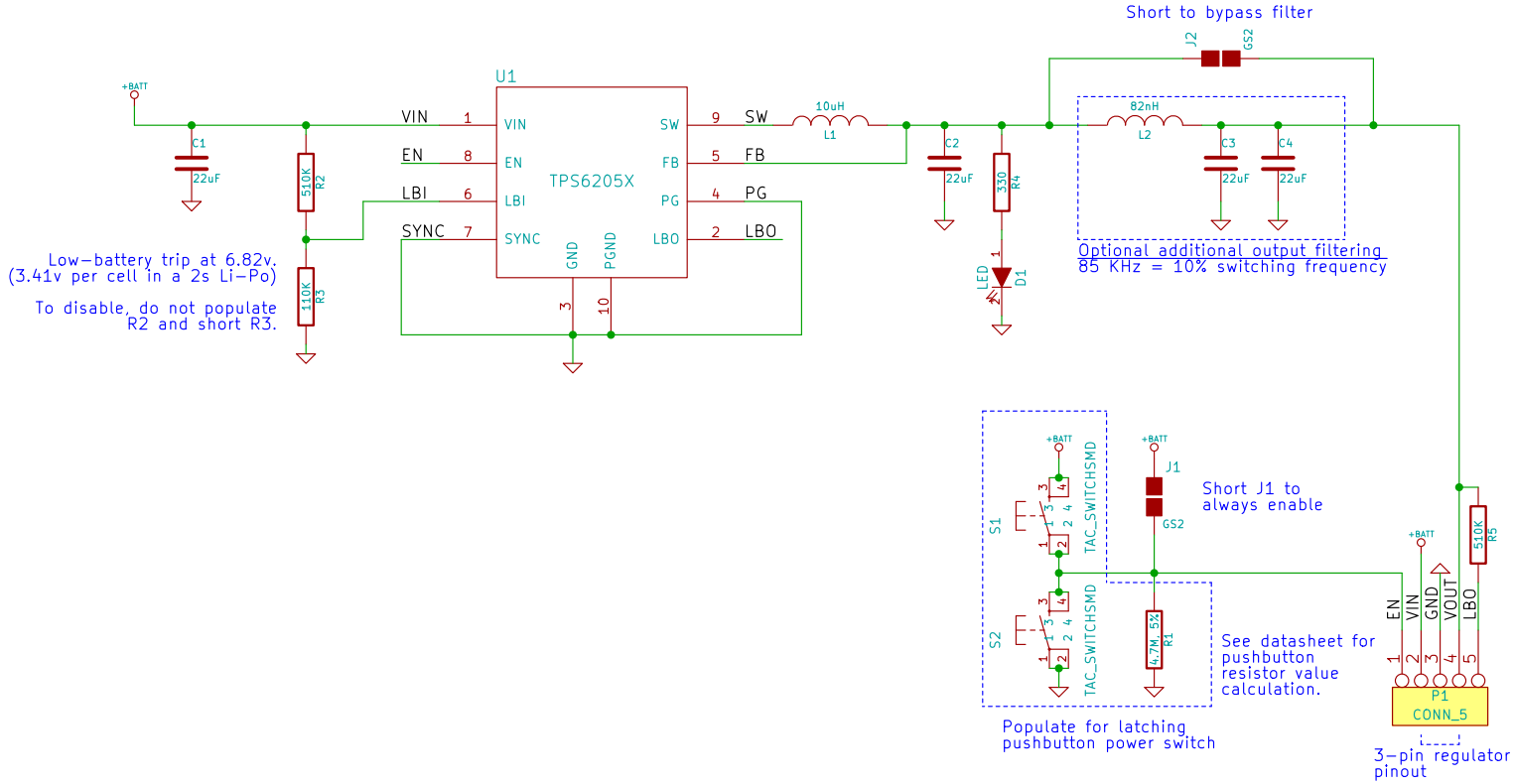

UCR Micromouse	
File: TPS62056_Reference.sch	
Sheet: /	
Title: TPS6205x-based Fixed Voltage Switching Regulator Module	
Size: USLetter Date: 23 jul 2013	Rev: A
KiCad E.D.A.	Id: 1/1