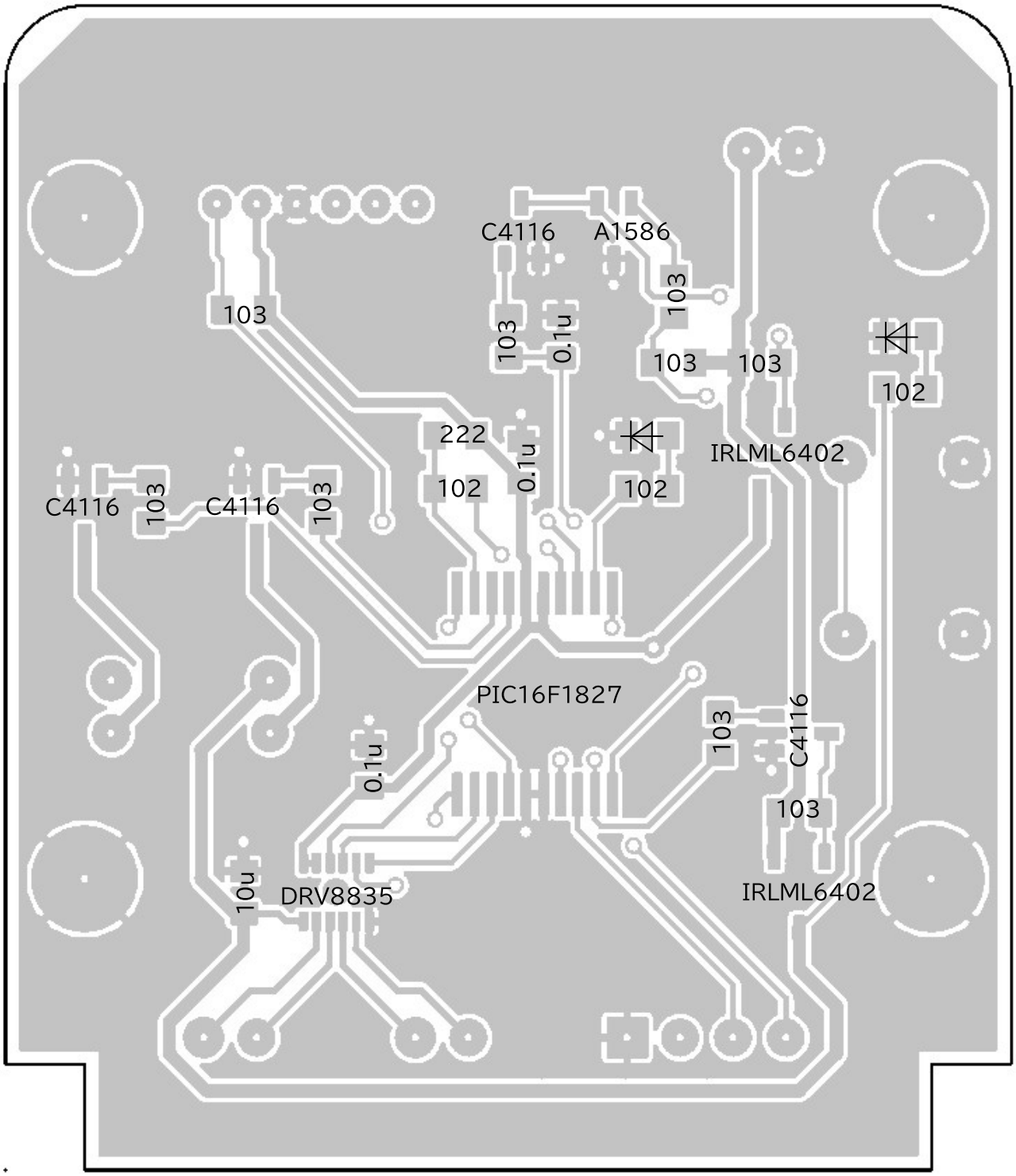
C4116
A1586
103
103
0.1u
103
103
103
102
222
0.1u
102
102
IRLML6402
C4116
103
C4116
103
PIC16F1827
0.1u
103
C4116
103
10u
DRV8835
IRLML6402