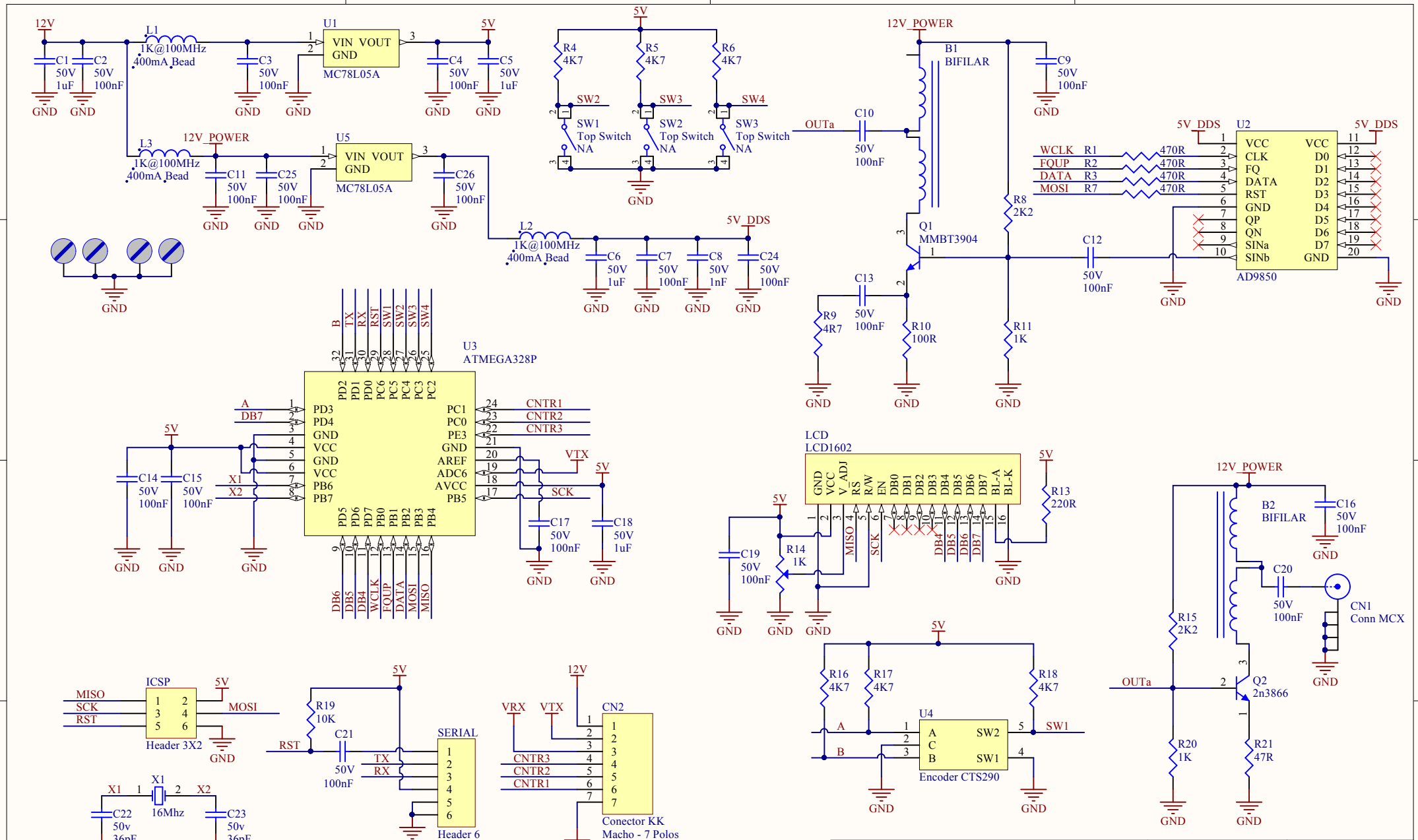
12V
C1 50V 1uF
C2 50V 100nF
L1 1K@100MHz 400mA Bead
U1 VIN VOUT GND MC78L05A
C3 50V 100nF
C4 50V 100nF
C5 50V 1uF
5V
GND
L3 1K@100MHz 400mA Bead
12V_POWER
C11 50V 100nF
C25 50V 100nF
U5 VIN VOUT GND MC78L05A
C26 50V 100nF
L2 1K@100MHz 400mA Bead
C6 50V 1uF
C7 50V 100nF
C8 50V 1nF
C24 50V 100nF
5V_DDS
R4 4K7
R5 4K7
R6 4K7
SW1 Top Switch NA
SW2 Top Switch NA
SW3 Top Switch NA
SW2
SW3
SW4
B1 BIFILAR
C9 50V 100nF
OUTa
C10 50V 100nF
Q1 MMBT3904
R8 2K2
C12 50V 100nF
C13 50V 100nF
R9 4R7
R10 100R
R11 1K
U2 AD9850
VCC CLK FQ DATA RST GND QP QN SINa SINb
VCC D0 D1 D2 D3 D4 D5 D6 D7 GND
WCLK R1 470R
FQUP R2 470R
DATA R3 470R
MOSI R7 470R
U3 ATMEGA328P
PD2 PD1 PD0 PC6 PC5 PC4 PC3 PC2
PD3 PD4 GND VCC GND VCC PB6 PB7
PC1 PC0 PE3 GND AREF ADC6 AVCC PB5
PD5 PD6 PD7 PB0 PB1 PB2 PB3 PB4
CNTR1 CNTR2 CNTR3
VTX
SCK
C14 50V 100nF
C15 50V 100nF
X1
X2
C17 50V 100nF
C18 50V 1uF
LCD LCD1602
GND VCC V_ADJ RS R/W EN DB0 DB1 DB2 DB3 DB4 DB5 DB6 DB7 BL-A BL-K
R13 220R
C19 50V 100nF
R14 1K
MISO
SCK
DB4 DB5 DB6 DB7
B2 BIFILAR
C16 50V 100nF
C20 50V 100nF
CN1 Conn MCX
R15 2K2
Q2 2n3866
R20 1K
R21 47R
ICSP
MISO SCK RST MOSI
Header 3X2
R19 10K
C21 50V 100nF
RST
SERIAL
TX RX
Header 6
VRX VTX
CN2
CNTR3 CNTR2 CNTR1
Conector KK Macho - 7 Polos
X1 16Mhz
C22 50v 36pF
C23 50v 36pF
R16 4K7
R17 4K7
R18 4K7
U4 Encoder CTS290
A B C SW2 SW1
Projeto: Arduino VFO
Tamanho: A4
Eng. Felipe Navarro
Revisão: 1.0
Data: 07/06/2017
Hora: 22:36:37
Folha1 de 1
Arquivo: D:\CODE\Arduino_VFO\Arduino.SchDoc
NAVARRO ELETRÔNICA