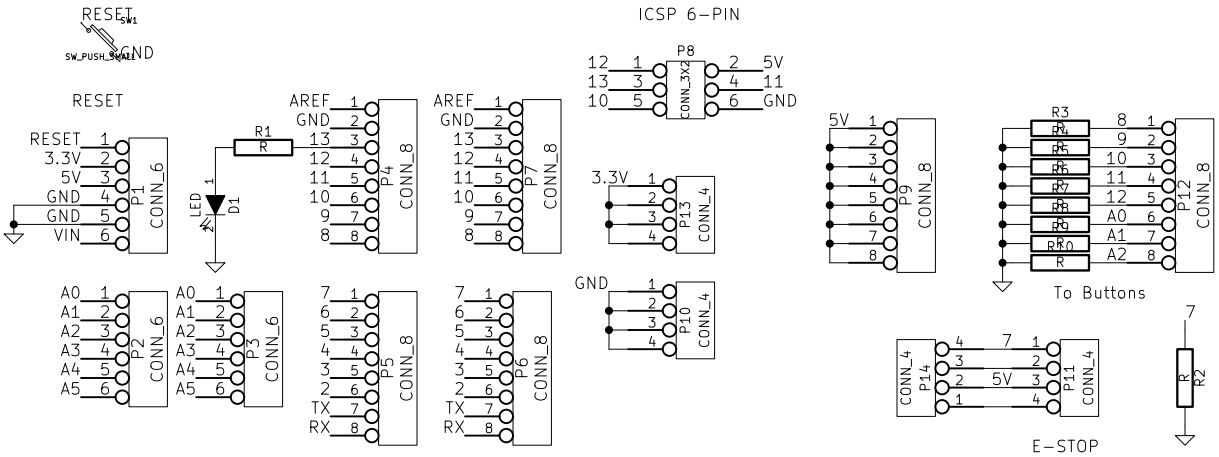

Designed by Carlos Chinchilla I Heart Engineering		
File: buttons_shield.sch Sheet: /		
Title: Buttons Shield for Turtlebot		
Size: User	Date: 15 aug 2012	Rev:
KiCad E.D.A.		Id: 1/1