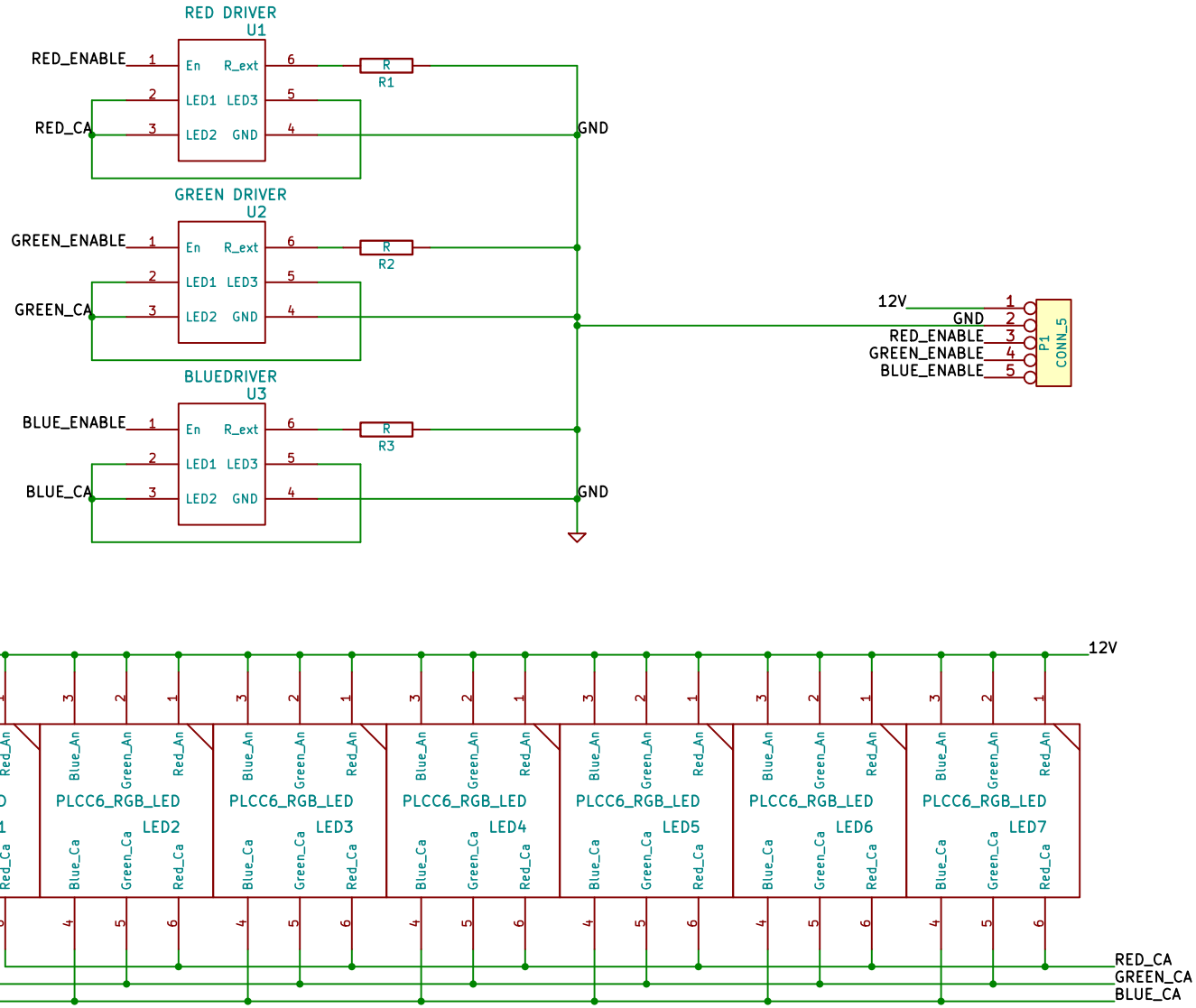

Miron Veryanskiy *iHeartEngineering*	
File: RGB_HEXAlight.sch Sheet: / *Title: HEXAlight*	
Size: USLetter *Date: 27 jul 2012*	*Rev: 0x01*
KiCad E.D.A.	Id: 1/1