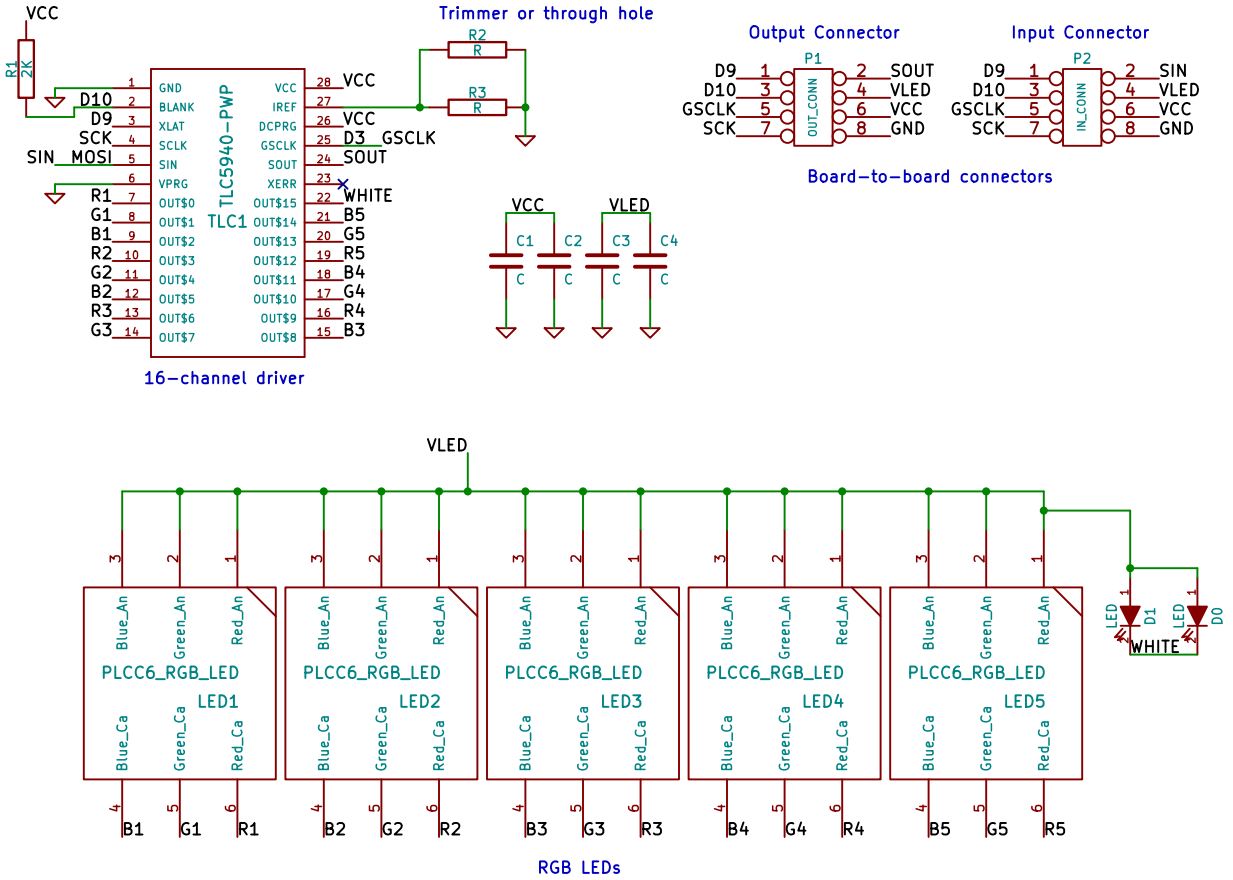

Made by Carlos Chinchilla *I Heart Engineering*	
File: strip.sch Sheet: /	
Title: DRINKS/ROFL	
Size: USLetter *Date: 2 jan 2013*	*Rev: 01/02*
KiCad E.D.A.	Id: 1/1