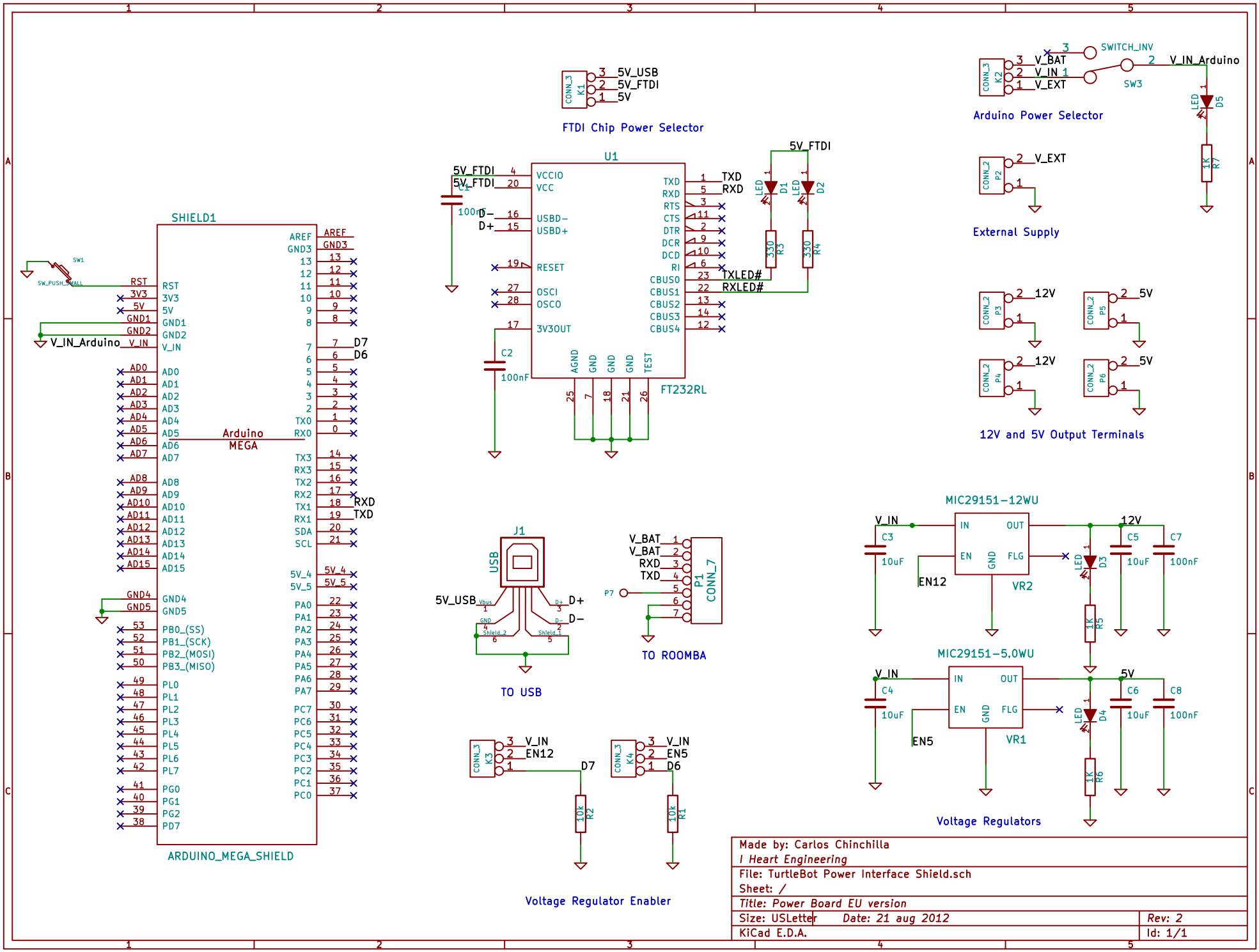
SHIELD1
Arduino MEGA
ARDUINO_MEGA_SHIELD
FTDI Chip Power Selector
U1
FT232RL
Arduino Power Selector
External Supply
12V and 5V Output Terminals
MIC29151-12WU
VR2
MIC29151-5.0WU
VR1
Voltage Regulators
TO USB
TO ROOMBA
Voltage Regulator Enabler
Made by: Carlos Chinchilla
I Heart Engineering
File: TurtleBot Power Interface Shield.sch
Sheet: /
Title: Power Board EU version
Size: USLetter Date: 21 aug 2012
Rev: 2
KiCad E.D.A.
Id: 1/1