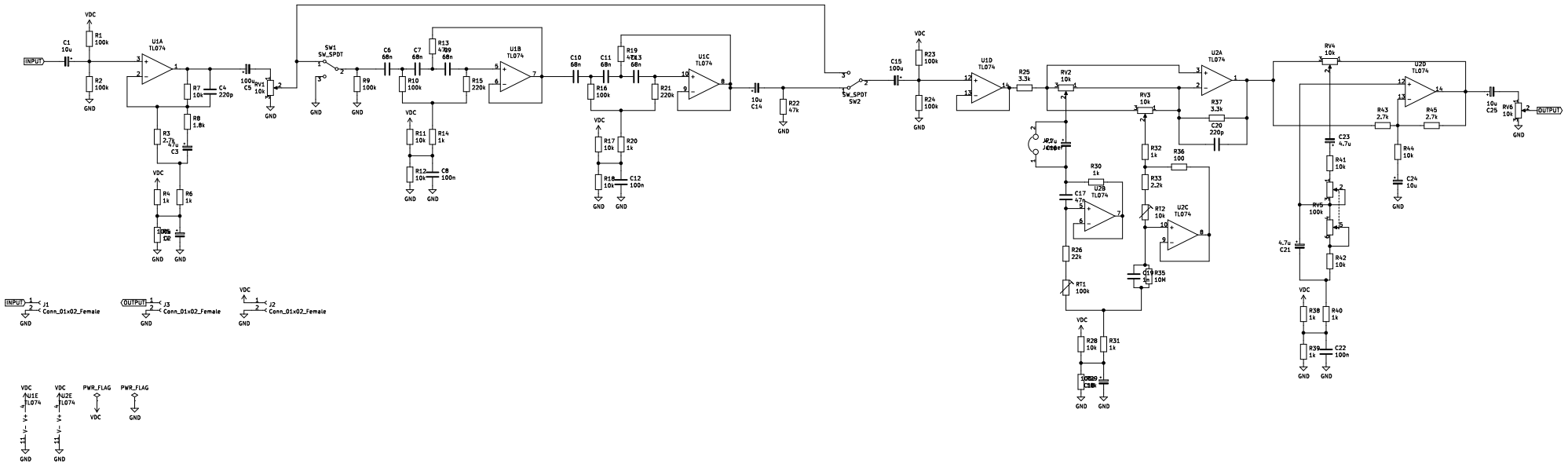

Sheet: /
File: aktivna_bass_gitara.sch

Title:

Size: A2	Date:	Rev:
KiCad E.D.A. kicad (5.1.10)-1		Id: 1/1