IS : 10158 - 1982
(Reaffirmed 1995)

Indian Standard

METHODS OF ANALYSIS OF SOLID WASTES (EXCLUDING INDUSTRIAL SOLID WASTES)

UDC 628·312·1 : 543

© *Copyright* 1982

INDIAN STANDARDS INSTITUTION
MANAK BHAVAN, 9 BAHADUR SHAH ZAFAR MARG
NEW DELHI 110002

Gr 6

September 1982

Indian Standard

METHODS OF ANALYSIS OF SOLID WASTES (EXCLUDING INDUSTRIAL SOLID WASTES)

Solid Wastes Sectional Committee, CDC 54

Members	*Representing*
SHRI S. C. ANAND	Rajasthan State Agro Industries Corporation Ltd, Jaipur
SHRI R. K. SURI (*Alternate*)	
SHRI F. A. ATTARWALA	Municipal Corporation of Greater Bombay
SHRI S. SHANKARAPPA (*Alternate*)	
SHRI P. K. BANERJEE CHOWDHURY	The Corporation of Calcutta
SHRI P. K. CHAKRAVARTY	The Tata Iron and Steel Co Ltd, Jamshedpur
CHIEF ENGINEER (THERMAL DESIGN)	Central Electricity Authority, New Delhi
DR S. K. CHOPRA	Cement Research Institute of India, New Delhi
DR K. C. NARANG (*Alternate* I)	
DR S. C. AHLUWALLIA (*Alternate* II)	
SHRI DALJIT SINGH	Steel Authority of India Ltd, New Delhi
SHRI J. C. SEHGAL (*Alternate*)	
SHRI A. H. GANDHI	Municipal Corporation, Ahmadabad
SHRI JWALA PRASAD	Ministry of Agriculture, New Delhi
SHRI D. N. KHURANA	Municipal Corporation of Delhi
SHRI R. K. KASHYAP (*Alternate*)	
SHRI S. M. MAHMOOD	Triveni Structurals Ltd, Allahabad
SHRI S. C. JAIN (*Alternate*)	
SHRI H. C. NANDI	Central Fuel Research Institute (CSIR), Dhanbad
SHRI T. H. NIRMAL	Indian Council of Agricultural Research, New Delhi
SHRI M. PARABRAHMAN	Department of Environment, Government of India, New Delhi
SHRI P. SAHA	Calcutta Metropolitan Development Authority, Calcutta
SHRI S. SUBBARAO	All India Institute of Hygiene and Public Health, Calcutta
SHRI A. V. RAO (*Alternate*)	
DR B. B. SUNDARESAN	National Environmental Engineering Research Institute (CSIR), Nagpur
SHRI A. D. BHIDE (*Alternate*)	
DR D. C. TAPADAR	Indian Paper Mills Association, Calcutta
DR N. D. MISRA (*Alternate*)	

(*Continued on page* 2)

© *Copyright* 1982

INDIAN STANDARDS INSTITUTION

This publication is protected under the *Indian Copyright Act* (XIV of 1957) and reproduction in whole or in part by any means except with written permission of the publisher shall be deemed to be an infringement of copyright under the said Act.

(*Continued from page* 1)

Members	*Representing*
SHRI J. M. TULI	Engineers India Ltd, New Delhi
SHRI A. D. JALGAONKAR (*Alternate*)	
SHRI S. VENKATARAMAN	King Institute, Madras
DR C. VENKOBACHAR	Indian Institute of Technology, Kanpur
DR A. V. S. PRABHAKARA RAO (*Alternate*)	
DR HARI BHAGWAN, Director (Chem)	Director General, ISI (*Ex-officio Member*)

Secretary

SHRI A. K. BAHL
Assistant Director (Chem), ISI

Urban Solid Wastes Subcommitte, CDC 54 : 2

Convener

SHRI A. D. BHIDE	National Environmental Engineering Research Institute (CSIR), Nagpur

Members

SHRI S. K. TITUS (*Alternate* to Shri A. D. Bhide)	
SHRI V. D. DESAI	Municipal Corporation of Greater Bombay
SHRI D. I. D'SOUZA	Tata Engineering & Locomotive Co Ltd, Pune
SHRI A. H. GANDHI	Municipal Corporation of Ahmadabad
SHRI S. GURAPPAJI	Karnataka Compost Development Corporation Ltd, Bangalore
SHRI V. K. KAPOOR	Ministry of Works & Housing, Government of India
SHRI D. N. KHURANA	Municipal Corporation of Delhi
SHRI R. K. KASHYAP (*Alternate*)	
SHRI V. N. LELE	Chemical and Process Industries Consultants, Jaipur
SHRI R. K. SENGUPTA	Calcutta Metropolitan Development Authority, Calcutta
SHRI J. M. TULI	Engineers India Ltd, New Delhi
SHRI A. D. JALGAONKAR (*Alternate*)	

Panel for Methods of Sampling and Test for Solid Wastes, CDC 54 : 2 : 6

SHRI R. K. BHAVE	Steel Authority of India Ltd, Rourkela
SHRI T. H. NIRMAL	Indian Council of Agricultural Research, New Delhi
SHRI S. C. SHARMA	Indian Sugar Mills Association, Calcutta
DR D. C. TAPADAR	Indian Paper Mills Association, Calcutta
SHRI A. SATYANARAYANA (*Alternate*)	
SHRI S. K. TITUS	National Environmental Engineering Research Institute (CSIR), Nagpur
SHRI V. P. THERGAONKAR (*Alternate*)	
SHRI S. VENKATARAMAN	King Institute, Madras
DR C. VENKOBACHAR	Indian Institute of Technology, Kanpur
DR A. V. S. PRABHAKARA RAO (*Alternate*)	

Indian Standard

METHODS OF ANALYSIS OF SOLID WASTES (EXCLUDING INDUSTRIAL SOLID WASTES)

0. FOREWORD

0.1 This Indian Standard was adopted by the Indian Standards Institution on 27 April 1982, after the draft finalized by the Solid Wastes Sectional Committee had been approved by the Chemical Division Council.

0.2 Due to rapid growth of urban areas, the problem of solid waste disposal has assumed an important position. Analysis will have to be done for carrying out feasibility studies for treatment and disposal of solid wastes as the best method of treatment/disposal depends on the characteristics and composition of the solid waste.

0.3 Analysis for determination of substances likely to be present in industrial solid wastes has not been covered in this standard. Separate standards, for constituents which may be present in solid wastes from specific industries/cases, would be formulated as and when necessary.

0.4 The method for preparation of solid waste sample for analysis is given in IS : 9234-1979* and the method for physical analysis and determination of moisture is prescribed in IS : 9235-1979†.

0.5 This standard is based on the information received from the National Environmental Engineering Research Institute (CSIR), Nagpur.

0.6 In reporting the result of a test or analysis, made in accordance with this standard, if the final value, observed or calculated, is to be rounded off, it shall be done in accordance with IS : 2-1960‡.

---

1. SCOPE

1.1 This standard prescribes methods of analysis of solid wastes (excluding industrial solid wastes) for the determination of the following :

a) Volatile and non-volatile matter,

*Method for preparation of solid waste sample for chemical and microbiological analysis.

†Method for physical analysis and determination of moisture in solid wastes (excluding industrial solid wastes).

‡Rules for rounding off numerical values (*revised*).

b) Kjeldahl nitrogen,
c) Total nitrogen,
d) Carbon content,
e) *p*H,
f) Calorific value,
g) Potassium, and
h) Phosphorus.

2. TERMINOLOGY

2.1 For the purpose of this standard the definitions of terms given in IS : 9569-1980* and the following shall apply.

2.1.1 *Volatile Substance* (*VS*) — The portion in refuse sample which decomposes when the sample is heated up to 600°C. This is also referred to as total organic matter.

2.1.2 *Non-Volatile Substance* (*NVS*) — The portion of the sample which does not decompose when heated up to 600°C.

2.1.3 *Kjeldahl Nitrogen* — Nitrogen in ammonia and nitrogen present in organic compounds which can be catalytically reduced to ammonia. Nitrate and nitrite nitrogen is not covered.

3. VOLATILE SUBSTANCE AND NON-VOLATILE SUBSTANCE

3.1 Principle — When a substance is heated the organic substance is oxidized into volatile oxidation products whereas inorganic substances give solid oxidation products.

3.2 Procedure — Place about 5 g finely ground sample in constant mass silica or procelain dish and heat in an electric furnace (muffle furnace) up to a temperature of 600°C for 2 hours. Allow the dish to cool in a desiccator and weigh it again.

3.3 Calculation — Calculate the volatile substance and non-volatile substance as percentage of the original mass as follows:

$$\text{Volatile substance, percent by mass } (VS) = \frac{\text{Initial mass} - \text{Final mass}}{\text{Initial mass}} \times 100$$

$$\text{Non-volatile substance, percent by mass} = 100 - VS$$

*Glossary of terms relating to solid wastes.

NOTE — At 600°C not only organic matter is lost but some of the inorganic compounds like metal carbonates are also decomposed into carbon dioxide. Hence the value of *VS* is not the correct total organic matter. Therefore, it is advisable to call it loss in mass at 600°C.

4. KJELDAHL NITROGEN

4.1 Principle of the Method — The sample is digested with concentrated sulphuric acid in the presence of a catalyst to convert the organic nitrogen into ammonium sulphate from which the ammonia is liberated by distillation with concentrated alkali solution. The ammonia so evolved is absorbed in standard sulphuric acid and the excess acid is titrated with standard alkali solution. Alternatively, in the modified method, the ammonia evolved is absorbed in boric acid and titrated against standard acid.

4.1.1 No single digestion procedure, which gives good results with all nitrogen containing compounds, can be recommended. As a general guide, however, the use of potassium sulphate and mercury catalyst as the most reliable mixture, particularly when prolonged digestion is required, is suggested. The mercury-selenium catalyst is more effective, but prolonged digestion should be avoided. Copper sulphate and selenium have been effectively used as catalyst for the analysis of biological materials. This mixture is probably not as efficient as the mercury-selenium catalyst but its use obviates the necessity of precipitating mercury before distillation of the ammonia. The time of digestion is reduced when selenium is used as a catalyst. The use of oxidizing agents, such as potassium permanganate or hydrogen peroxide, may be advantageous, particularly when a large amount of carbonaceous matter is to be destroyed. The organic nitrogen is not always completely converted into ammonium sulphate when the digest has become 'charfree', since some compounds, for example, pyridine and carboxylic acids, do not char when heated with concentrated sulphuric acid. It is, therefore, particularly important not to confuse 'charring time' with 'digestion time'. In many cases, a considerable 'after boil' may be necessary to obtain complete conversion to ammonia.

4.2 Quality of Reagents — Unless specified otherwise, pure chemicals and distilled water (*see* IS : 1070-1977*) shall be employed in tests.

NOTE — 'Pure chemicals' shall mean chemicals that do not contain impurities which affect the results of analysis.

4.3 Apparatus

4.3.1 *Kjeldahl Flask* — 500 ml capacity.

*Specification for water for general laboratory use (*second revision*).

4.3.2 *Distillation Assembly* — The assembly consists of a round bottom flask of 1 000 ml capacity fitted with a rubber stopper having two holes, through one of which passes one end of the connecting bulb tube and through the other the end of the tap or separating funnel which dips into the contents of the flask. The other end of the bulb tube is connected to the condenser. The lower end of the condenser is attached by means of a rubber tube to a dip tube which dips into a known quantity of acid (sulphuric or boric), contained in a beaker of 500 ml capacity, to which 3 to 4 drops of indicator solution has been added.

NOTE — In order to avoid back suction of the liquid in the beaker, presence of positive pressure by introduction of gas (nitrogen gas or air free from carbon dioxide) would make the operation smoother.

4.4 Reagents

4.4.1 *Potassium Sulphate or Anhydrous Sodium Sulphate*

4.4.2 *Copper Sulphate, Selenium Powder, Mercury or Any Other Suitable Mixed Catalyst — See* **4.1.1**.

4.4.3 *Concentrated Sulphuric Acid* — conforming to IS : 266-1977*.

4.4.4 *Sodium Hydroxide Solution* — Dissolve about 450 g of sodium hydroxide (pellets, flakes, sticks or lumps) in 1 000 ml of water.

4.4.5 *Standard Sulphuric Acid* — 0·5 N.

4.4.6 *Standard Sodium Hydroxide Solution* — 0·25 N.

4.4.7 *Alkaline Sodium Sulphide Solution* — Dissolve 20 g of sodium sulphide ($Na_2S.9H_2O$) in water, dilute to 50 ml, add 600 ml of sodium hydroxide solution (*see* **4.4.4**) and mix well.

4.4.8 *Methyl Red Indicator Solution — See* IS : 2263-1962†.

4.4.9 *Boric Acid Solution* — saturated. Dissolve 60 g of boric acid in one litre of hot water, cool and allow to mature for 3 days before decanting the clear liquid.

4.4.10 *Mixed Indicator Solution* — Methyl red and methyl blue prepared as prescribed in Table 3 of IS : 2263-1962†.

4.5 Procedure — Weigh accurately a suitable quantity of the finely ground sample into the Kjeldahl flask. The quantity of the sample taken shall be such that the ammonia liberated neutralizes not more than 40 ml of standard sulphuric acid or boric acid taken in the beaker into which the dip tube dips. Add 15 g of potassium sulphate or anhydrous sodium sulphate, 0·5 to 1 g of the catalyst and 25 ml or more if necessary,

*Specification for sulphuric acid (*second revision*).
†Methods of preparation of indicator solutions for volumetric analysis.

of concentrated sulphuric acid. Place the digestion flask in an inclined position and close the flask with a loosely fitting, pear-shaped, hollow glass stopper to prevent loss of sulphuric acid or entry of dust. Heat the mixture gently in a fume cupboard until the initial frothing has ceased. If the sample tends to foam or froth, heat very gently in the initial stages, a small piece of paraffin or zinc may also be added to reduce frothing, if necessary. Heat the liquid to boiling point. Continue boiling freely until the solution becomes clear and then boil for a further period of about two hours. Cool the contents of the flask.

4.5.1 Transfer completely the contents of the digestion flask into the round-bottom flask of the distillation assembly, using water. Add a few pieces of pumice stone. Place a measured volume (normally 50 ml is sufficient) of standard sulphuric acid in the beaker and add 3 drops of methyl red indicator. Fit up the distillation assembly. Add an excess of sodium hydroxide solution (or alkaline sodium sulphide solution where mercury is used as catalyst), through the separating funnel, and mix with the contents of the flask by mild shaking, so as to make the solution alkaline. Distil about one-third of the total volume of the solution in the flask. Cool tube with water, collecting the washings in the beaker. Titrate the excess of sulphuric acid in the beaker with standard sodium hydroxide solution. Carry out a blank determination in the same manner using the same quantities of all the reagents but without the sample.

4.5.1.1 *Calculation*

$$\text{Nitrogen, percent by mass} = \frac{1{\cdot}4\ (V_2 - V_1)\ N}{W}$$

where

V_1 = volume in ml of standard hydroxide solution used to neutralize the excess acid in the determination with the sample,

V_2 = volume in ml of standard sodium hydroxide solution used to neutralize the excess acid in the blank determination,

N = normality of the standard sodium hydroxide solution, and

W = mass in g of the sample taken for the test.

4.5.2 Alternatively, the ammonia evolved by distillation shall be absorbed in boric acid. Carry out digestion as prescribed in **4.5.** Transfer completely the contents of the digestion flask into the round-bottom flask through the separating funnel. Rinse the separating funnel

with water. The total volume of liquid in the distillation flask should not exceed half the capacity of the flask otherwise frothing may occur. Add excess of sodium hydroxide solution (or alkaline sodium sulphide solution when mercury is used as catalyst) to make the solution alkaline. Connect immediately the round-bottom flask to steam trap and condenser. The condenser should be arranged to dip the dip tube in 50 ml of boric acid which is kept cool in the beaker. Add 2-3 drops of the mixed indicator. Distil about one-third of the total volume of the solution in the flask. Cool and dismantle the distillation assembly. Rinse the tip of the condenser and the dip tube with water, collecting the washings in the beaker. Titrate the ammonia present in the distillate with sulphuric acid until the grass green colour changes to steel grey, a further drop then giving the purple colour.

4.5.2.1 *Calculation*

$$\text{Nitrogen, percent by mass} = \frac{1{\cdot}4 \times V \times N}{W}$$

where

V = volume in ml of standard sulphuric acid used in titration,

N = normality of standard sulphuric acid, and

W = mass in g of the sample taken for the test.

5. TOTAL NITROGEN

5.0 General — The following method is applicable in determining the total nitrogen (ammonical, organic and nitrate) of urban refuse, compost, etc.

5.1 Reagents

5.1.1 *Sucrose*

5.1.2 *Chromium Metal*

5.1.3 *Concentrated Hydrochloric Acid*

5.1.4 *Potassium Sulphate*

5.1.5 *Mercuric Oxide*

5.1.6 *Sulphuric Acid (Concentrated)* — 95–98 percent.

5.1.7 *Zinc Metal (Granulated)*

5.1.8 *Alkaline Thiosulphate Solution* — Dissolve 450 g sodium hydroxide in approximately 700 ml water, cool and add 32 g sodium thiosulphate and dilute with water to one litre.

5.1.9 *Boric Acid* — 4 percent.

5.1.10 *Mixed Indicator* — Mix 10 ml of 0·1 percent bromocresol green in 95 percent alcohol with 2 ml of 0·1 percent methyl red in 95 percent alcohol. The colour produced by this indicator in boric acid is bluish purple. With a trace of ammonia the colour becomes bluish green. One drop in excess of acid turns the colour of the solution to pink.

5.1.11 *Sulphuric Acid* — 0·1 N.

5.1.12 *Alundum*

5.2 Procedure — Weigh about 5 g of prepared solid sample (also run a blank by weighing 2 g of sucrose). Transfer the samples to 500 ml Kjeldahl flask. To each flask add 1·2 g chromium and 35 ml distilled water. Keep it for 10 minutes with swirling. Now add 7 ml concentrated hydrochloric acid to each flask. Keep it for some time so that reaction occurs. Heat each flask for 5 minutes on burner. Cool and add 22 g potassium sulphate, 1·0 g mercuric oxide and 1·5 g alundum to each sample. Add 25 ml concentrated sulphuric acid to each flask. Heat each flask slowly in the initial stage and heat for about 2 h with occasional swirling. When the digestion mixture becomes whitish yellow, allow the digestion mixture to cool. Add water and transfer the mixture in 200 ml volumetric flask and make up to 200 ml. Transfer 100 ml of this to nitrogen distillation assembly and proceed for distillation as given below.

5.2.1 *Distillation* — Transfer 100 ml of the solution obtained by digestion to a Kjeldahl distillation assembly. Add sodium hydroxide (40 percent) until solution becomes highly alkaline. When mercuric oxide catalyst is used then add alkaline thiosulphate solution instead of sodium hydroxide (40 percent). Add 0·5 g of zinc dust or zinc clipping to the distillation flask. Carry out distillation collecting distillate in an Erlenmeyer flask containing 50 ml of 4 percent boric acid and a drop of mixed indicator. Collect about 150 ml of distillate (total 200 ml in flask). Titrate this distillate with 0·1 N sulphuric acid.

5.3 Calculation — Calculate the total nitrogen content as percentage of the original mass as follows :

$$\text{Nitrogen, percent} = \frac{(A - B) \times N \times 14 \times 100 \times 2}{E}$$

where

A = 0·1 N sulphuric used in the titration of the solid waste sample, ml;

B = 0·1 N sulphuric acid used in the titration blank, ml;

N = normality of standard sulphuric acid; and

E = mass in g of the solid waste sample.

6. CARBON

6.1 Empirical Method

6.1.1 *Principle* — The ratio of carbon content to volatile substance content remains constant, to some extent, for a particular type of refuse.

6.1.2 *Procedure* — Volatile substance is determined as described in **3** and the carbon content is calculated as follows:

Carbon, percent = $A \times VS$

where

A = a constant which depends on the composition of refuse of a particular place. A is calculated by the determination of carbon content by the combustion method and calculated as follows:

$$A \frac{\text{Carbon, percent}}{\text{Volatile substance, percent}}$$

6.2 Combustion Method

6.2.1 *Principle* — Carbon is determined gravimetrically after burning the sample in presence of oxygen and the carbon dioxide formed is estimated as sodium carbonate. The combustion is carried out in a 1 m long tube with 40 mm OD. The tube is tapered at one end. Leaving about 400 mm from non-tapered end, the materials are filled in this sequence; special mixture of asbestos, platinized asbestos and aluminium oxide, lead chromate, asbestos, copper dioxide, asbestos, lead chromate, silver wool, lead dioxide and silver wire. The accelerator iron chips are added to the sample which ignites and starts the exothermic reaction.

6.2.1.1 This method can be used for raw garbage, compost and refuse from incinerator and other dry matter having carbon within a range of 0·5 percent to 83 percent.

6.2.1.2 The apparatus used essentially consists of three parts, the cleaning of inlet oxygen gas, the furnace with packed combustion tube and gas absorption unit.

6.2.2 *Apparatus* — A sketch of the apparatus is shown in Fig. 1 and a general outline of the carbon hydrogen train is given in Fig. 2.

6.2.2.1 *Glass Wool*

6.2.2.2 *Muffle furnace* — It has three parts :

Section	*Operating temperature*	*Length*
A	950°C	0·2 m
B	800°C	0·3 m
C	200°C	0·1 m

NOTE — It is important that the temperature of the zone in which lead chromate has been placed does not rise significantly above 800 °C at any time

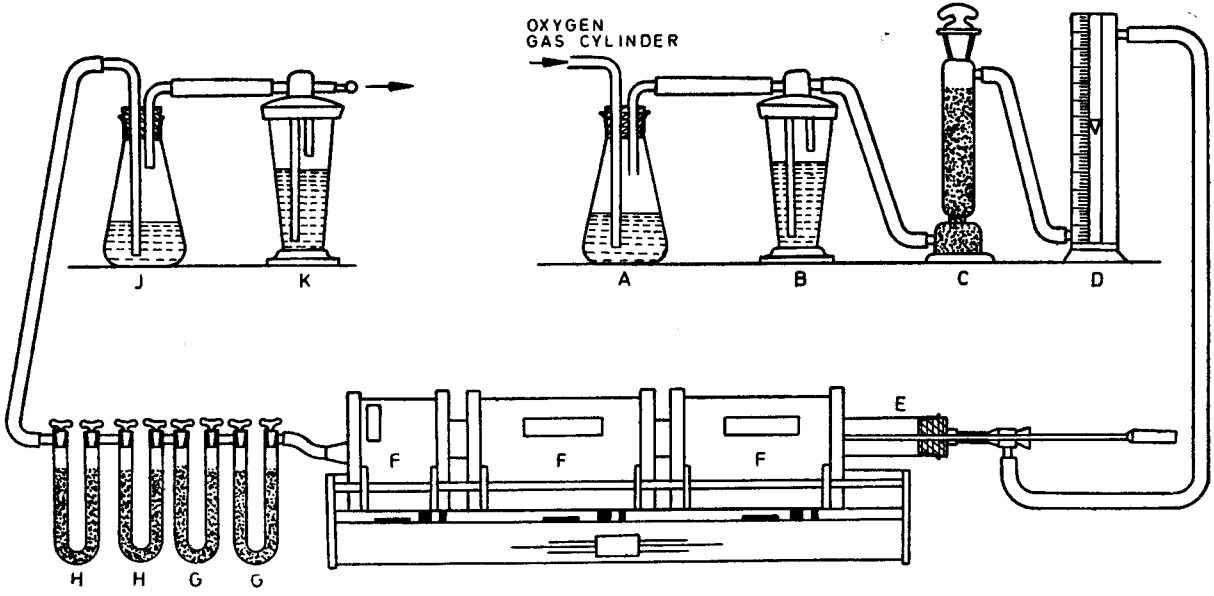

A — Liquid back flow trap
B — Gas washer
C — Drying jar
D — Rota meter
E — Combustion tube
F — Furnace
G — Water absorption tubes (two)
H — Carbon dioxide absorption tubes (two)
J — Liquid back flow trap
K — Gas washer

FIG. 1 CARBON-HYDROGEN ESTIMATION ASSEMBLY

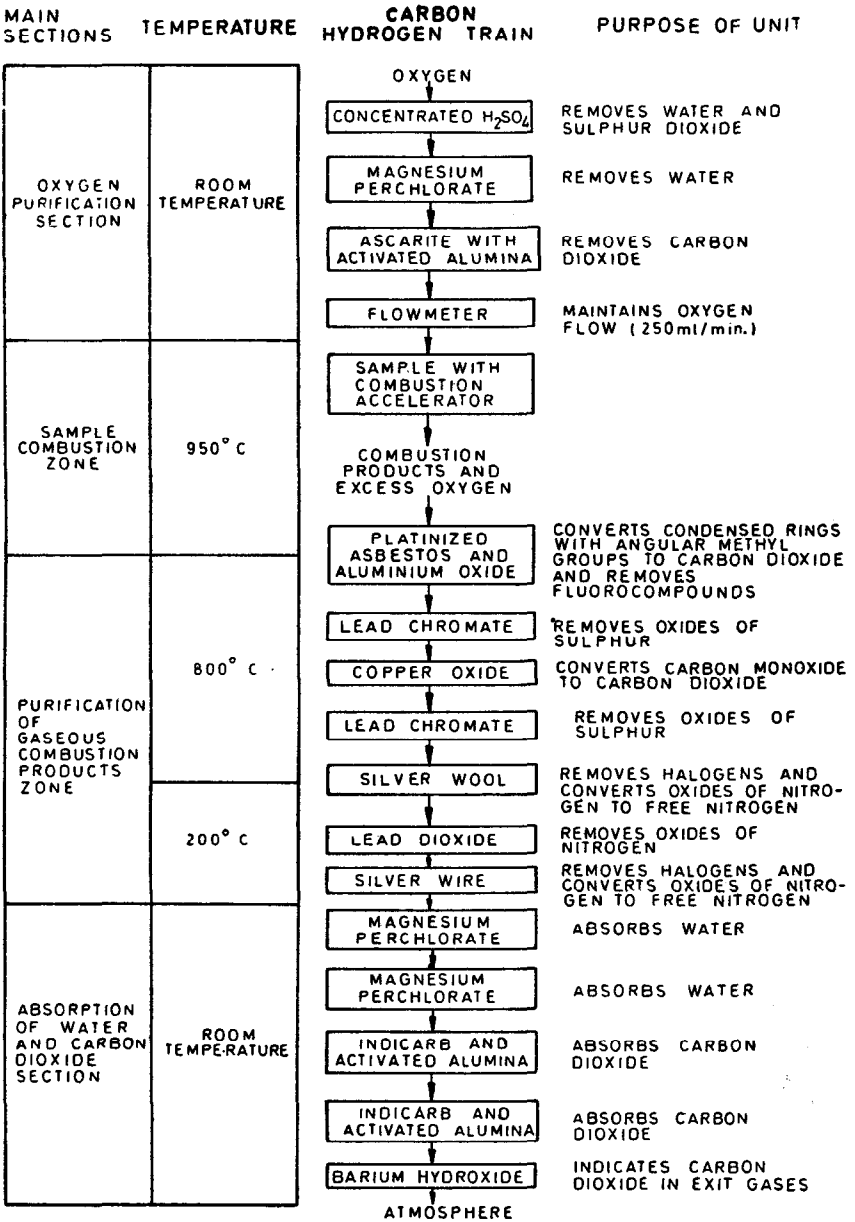

FIG. 2 GENERAL OUTLINE OF CARBON-HYDROGEN TRAIN

6.2.2.3 *Combustion tube* — Made of silica glass 1 m long, 35 mm ID and 40 mm OD. A schematic diagram of the packed combustion tube is shown in Fig. 3.

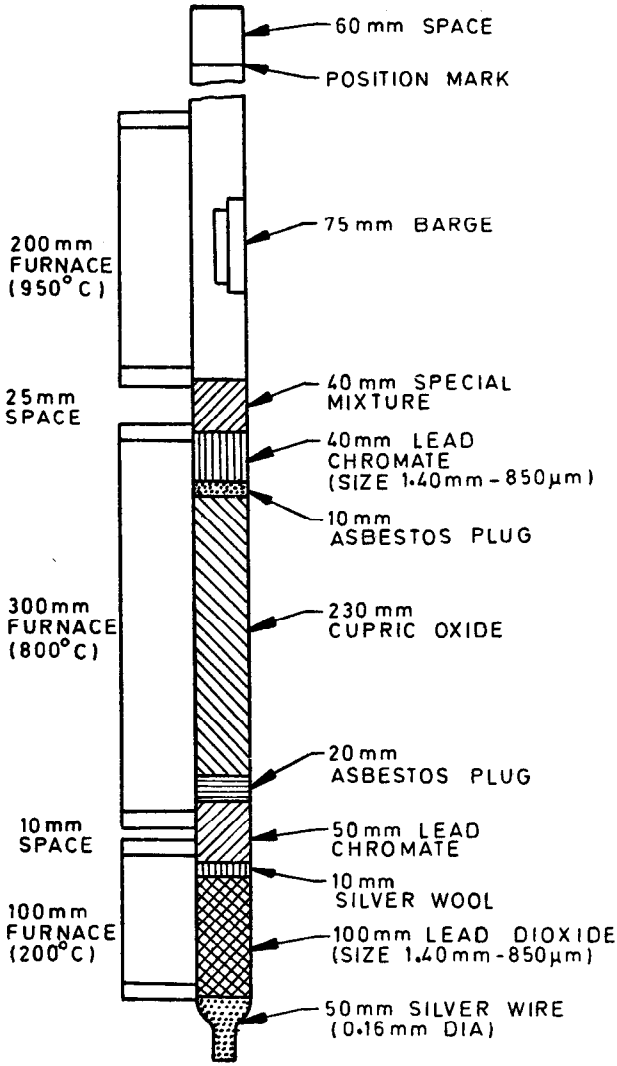

FIG. 3 PACKED COMBUSTION TUBE

6.2.2.4 *Combustion boat*

6.2.2.5 *Absorption jar for cleaning the oxygen gas*

6.2.2.6 *Container for absorption of carbondioxide produced*

6.2.2.7 *Analytical balance*

6.2.2.8 *Erlenmeyer flasks*

6.2.2.9 *Polythene tubing, rubber cork, etc*

6.2.3 *Reagents* — Unless otherwise specified, pure chemicals and distilled water (*see* IS : 1070-1977*) shall be employed in the test. The reagents required are given below.

NOTE — ' Pure chemicals ' shall mean chemicals that do not contain impurities which effect the results of analysis.

6.2.3.1 *Oxygen* — 99·5 percent pure.

6.2.3.2 *Sulphuric acid, concentrated*

6.2.3.3 *Magnesium perchlorate* (*anhydrous*) (*dehydrite*)

6.2.3.4 *Ascarite* (*sodium hydroxide on asbestos* — size 2·36 mm — 850 μm)

6.2.3.5 *Activated alumina* — size 2·36 mm — 1·18 mm

6.2.3.6 *Silver wire* — 0·16 mm dia

6.2.3.7 *Lead dioxide brown* — size 1·40 mm — 850 μm

6.2.3.8 *Silver wool*

6.2.3.9 *Lead chromate* — size 1·40 mm — 850 μm, or powder which has fused at 820°C for one hour and ground to about 1·40 mm — 850 μm size.

6.2.3.10 *Cupric oxide* (before using ignite at 800°C for 1 hour)

6.2.3.11 *Platinized asbestos* — 5 percent.

6.2.3.12 *Aluminium oxide*

6.2.3.13 *Accelerator chips* (*iron*)

6.2.3.14 *Indicarb* — size 3·55 mm – 1·70 mm

6.2.3.15 *Absorbent cotton*

---

*Specification for water for general laboratory use (*second revision*).

6.2.3.16 *Barium hydroxide solution* — Dissolve 12·0 g of $Ba(OH)_2$ in distilled water and dilute with distilled water to one litre.

NOTE — Distilled water used for dissolving barium hydroxide shall be free from carbon dioxide. Boiling the distilled water is one of the methods of ensuring this.

6.2.3.17 *Thymolphthalein solution* — Dissolve 10 g thymolphthalein in ethanol or methanol and dilute with same to 1 litre.

6.2.4 *Procedure*

6.2.4.1 *Filling the combustion tube* — The combustion tube should be filled carefully so that the gases produced come in contact with a large surface area. Also the material should not be packed so much that gases cannot pass through it or required velocity of gas is not obtained. The procedure for filling is as follows:

a) Twist ten to fifteen silver wire (150 to 200 mm) strands together and insert in the tapered end of the combustion tube;

b) Hold the tube vertically with tapering end down;

c) Add 100 g lead dioxide (about 100 mm layer);

d) Insert 10 g silver wool (10 mm layer);

e) Add approximately 50 g lead chromate (50 mm layer);

f) Add asbestos loosely (20 mm layer);

g) Add 500 g cupric oxide to form a 230 mm layer;

h) Add asbestos loosely to form 10 mm plug;

j) Add 37 g lead chromate to form a 40 mm layer; and

k) Add a 40-50 mm layer of the special mixture consisting of 20 g platinized asbestos, 20 g asbestos and 10 g of aluminium oxide.

6.2.4.2 *Assembling of the combustion train* — Connect an oxygen cylinder with a regulator, which can afford 70 kPa, to a 500-ml Erlenmeyer flask with two-holed rubber cork, to serve as a back flow trap for liquid. Pass the gas from this flask through the gas washer which contains concentrated sulphuric acid. Dry the gas by passing through a jar containing magnesium perchlorate placed in the lower half of the jar and ascarite, topped with activated alumina in the upper half. Insert a small layer of glass wool beneath the magnesium perchlorate, and above the activated alumina. Let the oxygen flow through the jar from the bottom inlet at a flow rate of 250 ml per minute. Attach the combustion tube from the non-tapered end. Make a mark at a distance of 60 mm from the non-tapered end of combustion tube. This 60 mm length should always be outside. The mark helps the analyst in keeping the tube in correct position. Place aluminium foils around the tapered end to keep it hot and prevent water vapour from condensing. Attach the tapered end

with two absorption μ-tubes each containing magnesium perchlorate between two layers of glass wool (for water vapour absorption). Another two absorption U-tubes (for carbon dioxide) connected in series have a 10 mm layer of glass wool. Over this glass wool add 20 mm layer of indicarb. Cover the indicarb by a 5-mm layer of activated alumina. Fill rest of the space with glass wool. More than one such units can be used depending on the amount of carbon present in the sample. Attach this to the Erlenmeyer flask to prevent liquid back flow. Attach this to the container with barium hydroxide thymolphthalein solution. Use rubber tubing for all connections on tapered end of the combustion tube and tygon or polyethylene tubing on the other end.

6.2.4.3 *Conditioning of combustion tube* — Freshly packed tube contains moisture. It shall, therefore, be dried for two hours with the 0·2 m furnace at 950°C, 0·3 m furnace at 800°C and 0·1 m furnace at 200°C temperature and with the oxygen gas flowing through the tube at a rate of 250 ml per minute. Do not connect absorption container. Analyse sucrose initially to standardize the apparatus, till observed carbon and hydrogen content agree with theoretical values. The combustion train should be occasionally checked up as described above.

6.2.4.4 *Start up* — Set the temperature of the furnaces at 950°C, 800°C and 200°C respectively. Open the rubber stop cock and allow the oxygen to flow through at a rate of 250 ml per minute. Open the glass stop cock to allow oxygen to flow through the combustion tube. Attach at least two absorption U-tubes each for carbon dioxide and water. Allow the oxygen to flow through the system for about 10 minutes. Remove the absorption tube from the train and close each tube immediately. Record the mass of each tube, that is, carbon dioxide and water. These masses represent the initial mass of the absorption tubes after this again attach the absorption tubes to the train. When the gas starts flowing through the exit gas washer the train is ready for sample analysis. Check up the flow of exit gas which should be 250 ml/min.

6.2.4.5 *Procedure for sample* — Transfer 1 to 2 g of the sample into previously weighed constant mass combustion boat. If sample is non-uniform, up to 10 g may be taken. Sprinkle iron chips in each sample. Store each boat in desiccator. Cover the boats with lids and transfer them, after removing the lid, at the insertion end of combustion tube. Remove stopper with attached sample inserter and place boat about half way into the tube. Then close the combustion tube by moving the sample inserter; twist the stopper tight into the tube. After this set time at 60 minutes. Check the flow rate of oxygen after the gases start bubbling through exit gas washer. After about 5 minutes move the sample 25 mm towards the 950°C zone. After each of 3 successive 5 minute intervals move the sample boat towards 950°C zone.

After another 5 minutes move the boat completely in middle of 950°C zone. Allow the oxygen to flow through the train for the rest of 60 minutes. Remove the absorption tubes from the train and close them immediately so that they do not come in contact with the atmosphere. Record the mass of each tube of carbon dioxide and water.

6.2.4.6 *Shut down* — Disconnect the absorption tube from the combustion tube and close each one to the atmosphere. Turn each furnace off. Turn off the oxygen flow first at the main regulator valve on the oxygen cylinder, then at the low pressure valve. Turn the glass stop cock to divert the oxygen flow from the combustion tube to the room. Immediately close the rubber stop cock.

6.2.5 Calculate the theoretical concentration of either carbon or hydrogen in standard sample using the following equations :

$$E, \text{ percent} = \frac{N \times F \times 100}{S \times P}$$

where

E = percent by mass of the element carbon or hydrogen,

N = number of atoms of the element in a molecule of the standard,

F = factor derived by dividing the gram atomic weight of the element by the gram molecular weight of the standard,

S = mass of the total sample, and

P = decimal fraction representing the concentration of the standard compound in the total analysed sample.

6.2.5.1 *Sample*

$$C = \frac{(A - B) \times (X)\,(100)}{S}$$

where

C = carbon, percent,

A = sum total increase in the mass of carbon dioxide absorbing bulb as determined in unknown analysis;

B = sum of total increase in the mass of carbon dioxide absorbing bulb as determined in the blank;

X = a factor derived by dividing the gram atomic weight of carbon by the gram molecular weight of carbon dioxide, for example (12·01)/(44·01) = 0·272 9; and

S = mass of the sample.

7. MEASUREMENT OF *p*H

7.1 Apparatus

7.1.1 *p*H *Meter* — with a glass electrode.

7.2 Procedure — Place 10 g of the sample in a flask, add 500 ml distilled water and stir for 3 to 5 minutes. Let the mixture settle for 5 minutes and measure the *p*H using a *p*H meter with a glass electrode, previously calibrated and corrected for temperature.

8. CALORIFIC VALUE

8.1 Determine the calorific value in accordance with the method prescribed in IS : 1350 (Part II)-1970*.

9. POTASSIUM

9.1 Principle — Solid waste containing organic matter is decomposed by treatment with sulphuric-nitric acid mixture. Ashing is done to convert to their respective sulphates and the residue is treated further with acid mixture containing HF to make it silica free. Sample is then subjected to flame photometric analysis.

9.2 Reagents

9.2.1 *Acid Mixture* — 100 ml of 1 : 1 H_2SO_4, 650 ml of concentrated nitric acid and 250 ml of distilled water.

9.2.2 *Nitric Acid* — 5 percent.

9.2.3 *Hydrofluoric Acid* — 40 percent (m/m).

9.3 Procedure

9.3.1 Take one gram of sample and treat with 5 ml of concentrated sulphuric acid and 5 ml of concentrated nitric acid. Heat until brown fumes cease to come. Cool, again add 5 ml of concentrated nitric acid. Heat till brown fumes disappear. Cool, add 10 ml of hydrogen peroxide and heat to fumes. Ignite at 600°C till all the carbonaceous matter burns off. This will be complete in one hour.

9.3.2 Treat the ashed residue with 10 ml of acid mixture and 10 ml of hydrofluoric acid in a platinum dish. Heat to dryness Repeat the addition of acid mixture and 10 ml of hydrofluoric acid. Heat to dryness on a water bath. Cool, add 50 ml of 5 percent concentrated nitric acid. Heat to dryness on a water bath. Filter, if necessary, and make up the volume to 250 ml.

---

*Methods of test for coal and coke : Part II Determination of calorific value (*first revision*).

9.3.3 Subject aliquot of this solution to any calibrated flame photometer by using suitable filter for potassium.

10. PHOSPHORUS

10.1 Method A — Quinoline Phosphomolybdate Method (For High Concentration)

10.1.0 *Outline of the Method* — This method involves the formation of phosphomolybdic acid in a solution free from ammonium salts, followed by its precipitation as the salt of quinoline. Finally the quinoline phosphomlybdate is titrated with sodium hydroxide.

10.1.0.1 *General* — This method has some advantages over the ammonium phosphomolybdate method, namely, the precipitate is less soluble than ammonium phosphomolybdate, of constant composition, free from absorbed or occluded impurities and free from cations which interfere in the subsequent titration of the precipitate.

The method is applicable in the presence of calcium, magnesium, iron, aluminium, alkali salts, citric acid and citrates. Chromium present up to 18 times the phosphorus content and titanium up to 3·5 times have no effect on the method. The vanadium shall not exceed one-fifth of the phosphorus content. Nitric acid may be substituted for hydrochloric acid. Sulphuric and hydrofluoric acids are deleterious, but the effect of hydrofluoric acid may be avoided by the addition of boric acid. The interference of soluble silicates is avoided by the addition of citric acid with which molybdic acid forms a complex of such stability that its reaction with silicic acid is prevented, whereas the reaction with phosphoric acid proceeds normally. The interference of ammonia is avoided in the same manner.

10.1.1 *Reagents*

10.1.1.1 *Quinoline hydrochloric solution* — Add 20 ml of purified quinoline to 500 ml of hot water acidified with 25 ml of concentrated hydrochloric acid conforming to IS : 265-1976*. Cool and dilute to one litre.

The quinoline used shall be purified and distilled as follows :

Dissolve the technical grade quinoline in concentrated hydrochloric acid and add excess zinc chloride solution. This precipitates quinoline as a complex salt [$(C_9H_7N)_2 . ZnCl_4$] and in well-defined crystals. Separate and wash the crystals with cold dilute hydrochloric acid. Regenerate the pure quinoline by sodium hydroxide solution. Dry and distil to yield pure and distilled quinoline.

*Specification for hydrochloric acid (*second revision*).

10.1.1.2 *Citro-molybdate reagent* — prepared as follows :

a) Dissolve 150 g of sodium molybdate ($Na_2 MoO_4.2H_2O$) in 400 ml of water.

b) Dissolve 250 g of citric acid in 250 to 300 ml of water and 280 ml of concentrated hydrochloric acid (conforming to IS : 265-1976*).

Pour with stirring solution (a) to solution (b), cool and filter through a filter pad. A slight greenish colour is obtained on mixing which may deepen when exposed to sunlight. Add in drops, a 0·5 percent (*m/v*) solution of potassium bromate to discharge the colour. Store the solution in coloured, air-tight, stoppered glass bottles in the dark.

10.1.1.3 *Mixed indicator solution* — Mix 3 volumes of alcoholic phenolphthalein solution and one volume of alcoholic thymol blue solution (*see* Table 3 of IS : 2263-1962†).

10.1.1.4 *Standard sodium hydroxide solutions* — carbonate-free, 0·5 N and 0·1 N (*see* IS : 2316-1968‡).

10.1.1.5 *Standard hydrochloric acid* — 0·5 N and 0·1 N (*see* IS : 2316-1968‡).

10.1.1.6 *Dilute hydrochloric acid* — 10 percent, dilute 100 ml of hydrochloric acid (conforming to IS : 265-1976*) to one litre with water.

10.1.2 *Procedure* — Take in a 250-ml conical flask an aliquot of the clear solution of the material, containing about 50 mg of phosphorus pentaoxide (30 mg of P) present as orthophosphate in about 100 ml (*see* Note 1 under **10.1.2.1**). Add 50 ml of citro-molybdate reagent and bring to boil. Add 5 drops of quinoline hydrochloride solution, stirring during the addition. Again heat to boiling and add quinoline hydrochloride solution drop by drop with constant stirring until 2 ml have been added. To the gently boiling solution add the quinoline hydrochloride solution few millilitres at a time with constant stirring until a total of 60 ml has been added. In this manner, a coarsely crystalline precipitate is produced. Allow to stand on the hot-plate for 15 minutes and then cool to room temperature. Filter through a filter paper or pulp pad employing suction and wash the flask, precipitate and filter with cold water until they are free from acid. Transfer the filter pad and the precipitate to the original

*Specification for hydrochloric acid (*second revision*).

†Methods of preparation of indicator solution for volumetric analysis.

‡Methods of preparation of standard solutions for colorimetric and volumetric analysis (*revised*).

flask and rinse the funnel with water into the flask. If necessary, wipe the funnel with a small piece of damp filter paper to ensure complete removal of the precipitate and place the paper in the flask. Dilute to about 100 ml with water. Stopper the flask and shake it vigorously until the pulp and the precipitate are completely disintegrated. Remove the stopper and wash it with water, returning the washing to the flask. From a burette and 50 ml of 0·5 N standard sodium hydroxide solution, shaking the flask during the addition. Shake vigorously until all the precipitate dissolves (*see* Note 2 under **10.1.2.1**). Add one ml of mixed indicator solution and titrate the excess of sodium hydroxide solution with 0·5 N hydrochloric acid until the indicator changes from violet to green-blue and then very sharply to yellow.

10.1.2.1 Carry out a blank determination using all reagents, without the sample and using exactly 0·1 N standard sodium hydroxide solution and 0·1 N standard hydrochloric acid instead of 0·5 N acid and 0·5 N alkali.

NOTE 1 — The volume should not exceed 100 ml, as any reduction in the concentration of hydrochloric acid may lead to the formation of a cream-coloured precipitate of the wrong composition. To avoid such contamination in the presence of sulphates, a higher concentration of hydrochloric acid is necessary.

NOTE 2 — Examine the disintegrated paper pulp carefully for specks of undissolved precipitate which sometimes dissolves in excess of sodium hydroxide with difficulty.

10.1.3 *Calculation*

$$\text{Phosphates (as P), percent by mass} = \frac{0{\cdot}059\,65\left[V_1 - V_2 - \left(\frac{V_3 - V_4}{5}\right)\right]}{M}$$

$$\text{Phosphates (as } P_2O_5\text{), percent by mass} = \frac{0{\cdot}136\,6\left[V_1 - V_2 - \left(\frac{V_3 - V_4}{5}\right)\right]}{M}$$

where

V_1 = volume in ml of 0·5 N sodium hydroxide solution used with the sample,

V_2 = volume in ml of 0·5 N hydrochloric acid used with the sample,

V_3 = volume in ml of 0·1 N sodium hydroxide used in the blank,

V_4 = volume in ml of 0·1 N hydrochloric acid used in the blank, and

M = mass in g of the material contained in the solution taken for the precipitation.

10.2 Method B — Method Based on the Reduction with Stannus Chloride (for Concentrations Below 0·003 mg/l)

10.2.0 *Outline of the Method* — A blue colour is produced by the reduction of phosphomolybdic acid with freshly prepared stannous chloride solution.

10.2.1 *Apparatus*

10.2.1.1 *Separating funnels* — of 200 ml capacity.

10.2.1.2 *Nessler cylinders* — of 50 ml capacity (*see* IS : 4161-1967*).

10.2.1.3 *p*H *meter* — glass electrode type.

10.2.2 *Reagents*

10.2.2.1 *Ammonium molybdate solution* — Dissolve 10 g of ammonium molybdate in 100 ml of water. When cool, add the solution to 300 ml of 1 : 1 sulphuric acid. Keep the reagents in a glass bottle, protected from light.

10.2.2.2 *Stannous chloride solution* — Warm 0·1 g of tin foil in 2 ml of hydrochloric acid and a drop of 4 percent (*w/v*) copper sulphate solution in a test tube until no more tin dissolves, cool and dilute to 10 ml with water. The reagent shall be prepared freshly for each determination.

10.2.2.3 *Standard phosphate solution* — Dissolve 3·77 g of sodium hydrogen phosphate ($Na_2HPO_4 . 12H_2O$) in water and dilute to 1 000 ml. One millilitre of the solution contains 1·0 mg of phosphate (as PO_4). It may be diluted suitably to contain 10, 25, 50 or 100 g of phosphate per millilitre.

10.2.2.4 *Ether* — Conforming to IS : 336-1964†.

10.2.2.5 *Hydrochloric acid* — conforming to IS : 265-1976‡.

10.2.3 *Procedure*

10.2.3.1 Prepare the solution. Take a convenient aliquot of the prepared solution, so as to contain 0·025 mg of phosphorus (as P_2O_5). Transfer the solution to a platinum dish and dilute to 50 ml. Digest on a steam-bath for 20 minutes. Cool, adjust the *p*H to about 4 and dilute to 75 ml. Add one ml of ammonium molybdate reagent and mix well. When it is dissolved adjust the *p*H to 2 by adding dilute hydrochloric acid. Check the *p*H using *p*H meter (glass electrode). Heat to boiling, cool to

*Specification for Nessler cylinders.
†Specification for ether (*revised*).
‡Specification for hydrochloric acid (*second revision*).

room temperature, add 10 ml of concentrated hydrochloric acid and dilute to 100 ml with water. Transfer the solution to a separating funnel, add 35 ml of ether, shake vigorously and allow to separate. Draw off the aqueous phase which may contain silicates and discard. Wash the ether phase with 10 ml of hydrochloric acid and allow to separate. Drain off and discard this aqueous phase. Drain the ether layer quantitatively to a Nessler cylinder and develop the colour by adding 0·15 ml of stannous chloride reagent. Mix well and make up to mark with ether.

10.2.3.2 Transfer several aliquots of the standard phosphate solution to separating funnels and develop the colour following the steps described in **10.2.3.1.**

10.2.3.3 Compare the colour with those produced with the standard phosphate solution. Note the volume of the standard phosphate solution with which the colour of the test solution matches closely.

10.2.3.4 *Calculation*

$$\text{Phosphate (as } PO_4\text{), percent by mass} = \frac{100 \times f \times V}{M}$$

where

f = mass in g of phosphorus (as PO_4) equivalent to one ml of standard phosphate solution,

V = volume in ml of standard phosphate solution matching closely with colour of the test solution, and

M = mass in g of the material in the aliquot used for test.

NOTE — The colour is produced only in presence of orthophosphates. Meta and pyro phosphate should be completely hydrolyzed before determination. Free acids and alkalis which depress the colour development should be neutralized. Organic acids like citric, tartaric and oxalic inhibit the colour formation. If organic matter is present in appreciable amounts, it should be removed. Ferric iron exceeding one ppm should be reduced to ferrous iron as well as arsinate to arsenite.

INTERNATIOAL SYSTEM OF UNITS (SI UNITS)

Base Units

Quantity	*Unit*	*Symbol*
Length	metre	m
Mass	kilogram	kg
Time	second	s
Electric current	ampere	A
Thermodynamic temperature	kelvin	K
Luminous intensity	candela	cd
Amount of substance	mol	mole

Supplementary Units

Quantity	*Unit*	*Symbol*
Plane angle	radian	rad
Solid angle	steradian	sr

Derived Units

Quantity	*Unit*	*Symbol*	*Definition*
Force	newton	N	1 N = 1 kg.m/s^2
Energy	joule	J	1 J = 1 N.m
Power	watt	W	1 W = 1 J/s
Flux	weber	Wb	1 Wb = 1 V.s
Flux density	tesla	T	1 T = 1 Wb/m^2
Frequency	hertz	Hz	1 Hz = 1 c/s (s^{-1})
Electric conductance	siemens	S	1 S = 1 A/V
Electromotive force	volt	V	1 V = 1 W/A
Pressure, stress	pascal	Pa	1 Pa = 1 N/m^2