Festo Design Tool 3D

Order option: pre-packed

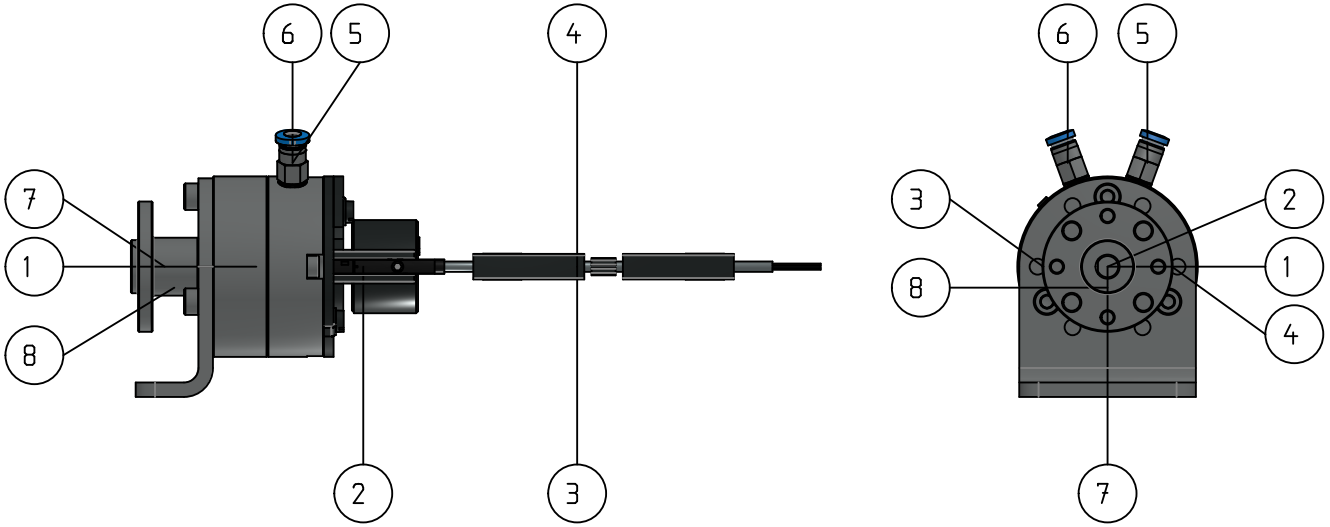

Position	Teilenummer	Menge	Typ	Anziehdrehmoment
1	1845709	1 PCE	DRVS-8-180-P	
2	173206	1 PCE	WSM-8-SME-10	
3	551373	1 PCE	SMT-10M-PS-24V-E-2.5-L-OE	0.2 ±0.1 Nm
4	551373	1 PCE	SMT-10M-PS-24V-E-2.5-L-OE	0.2 ±0.1 Nm
5	153301	1 PCE	QSM-M3-3	0.48 ±0.27 Nm
6	153301	1 PCE	QSM-M3-3	0.48 ±0.27 Nm
7	185949	1 PCE	FWSR-8	
8	3371841	1 PCE	DAMH-Q12-8	

Festo Design Tool 3D
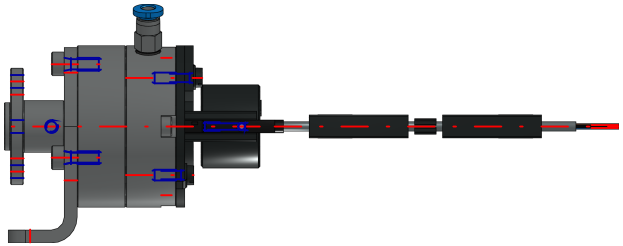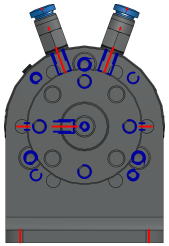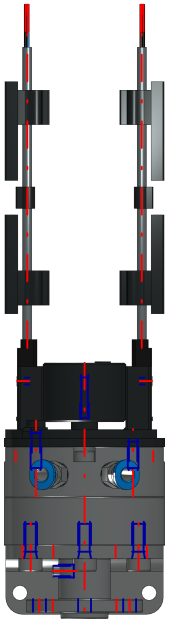
Order option: pre-packed