CROWn: A Unified Framework for Anti-Aliased Downsampling and Phase-Calibrated Fusion in 3D Medical Segmentation

Xingru Huang [1,2,3*] Shuanghua Ye [1,2*] Zhao Huang [5] Wenwen Tang [7†] Huiyu Zhou [6]
Zhiwen Zheng [1,2,3†] Jin Liu [1,2,3†] Xiaoshuai Zhang [4†]

[1] Hangzhou Dianzi University, Hangzhou 310018, China
[2] Weidian Corporation, Beijing 100015, China
[3] Zhejiang Provincial Key Laboratory of Low Altitude Ubiquitous Networking Technology, Hangzhou Dianzi University, Hangzhou 310018, China
[4] Faculty of Information Science and Engineering, Ocean University of China, Qingdao 266404, China
[5] School of Natural and Computing Sciences, University of Aberdeen, Aberdeen AB24 3UE, Great Britain
[6] School of Computing and Mathematical Sciences, University of Leicester, Leicester LE1 7RH, UK
[7] Johns Hopkins University, Baltimore, MD 21218, USA

Abstract

Precise 3D medical image segmentation is a clinical cornerstone for diagnosis, therapy planning, and longitudinal monitoring. However, routine acquisition with anisotropic voxel spacing and heterogeneous reconstruction induces downsampling aliasing and cross-scale misalignment that blur boundaries, fragment topology, and undermine reliability. Existing U-shaped CNN or Transformer designs neither control alias injection at decimation nor explicitly align high-resolution evidence before decoder fusion, leading to unstable interfaces under device and protocol variability. We introduce the Coset-fibRated micrO-local co-attention Network (CROWn), a general segmentation framework that couples sampling theory with representation learning to jointly suppress aliasing and calibrate cross-scale fusion. CROWn comprises two complementary components. The Microlocal Polyphase Co-Attentive Decimator (μPCAD) performs axis-aware polyphase analysis with pooled–subband co-attention and explicit anti-alias low-pass, routing boundary-relevant high-frequency evidence while attenuating spurious phase components during downsampling. The Octaphase Coset Fibration (OCF) anti-aliases high-resolution skips, restructures them via 3D space-to-depth into cosets, and applies phase attention with edge-gated modulation to deliver compact, phase-aligned, boundary-aware features to the decoder. Extensive evaluations across 15 publicly available datasets spanning CT, MRI, and OCT demonstrate CROWn's state-of-the-art performance against 17 recent leading methods, improves overlap and topological consistency, consistently reduces boundary errors, while maintaining controlled training and inference cost. The code is publicly available at https://github.com/IMOP-lab/CROWn.

*Equal contribution
†Corresponding author

1. Introduction

Reliable volumetric delineation is a prerequisite for quantitative imaging workflows such as tumor volumetry, organ-at-risk contouring, and longitudinal disease burden tracking in CT, MRI, and OCT [18]. However, routine acquisition and multi-site aggregation introduce physical and protocol variability that directly perturbs the statistics of the input volume and the stability of downstream segmentors [9]. Anisotropic voxel spacing and modality incur partial-volume effects and slice-thickness aliasing. Furthermore, heterogeneous reconstruction kernels, denoising pipelines, and intensity scaling shift both spatial statistics and frequency occupancy [58]. These factors degrade edge gradients, distort boundaries, and produce plane-to-plane inconsistencies that standard isotropic kernels and patch tokenization do not explicitly correct [58]. As a result, models trained in a single regime often entangle device-specific cues with anatomy to limit cross-domain generalization [9]. A formulation that treats sampling, aliasing, and boundary evidence as coupled problems, becomes necessary for trustworthy 3D segmentation under realistic acquisition.

Despite rapid progress from ConvNets to volumetric Transformers, three mechanism-level gaps persist [12]. (i) Downsampling aliasing and edge attenuation. Strided convolutions and pooling compress spectra without anti-aliasing to suppress thin structures and amplify staircase artifacts; spacing-agnostic isotropic filters misalign tri-axial evidence under anisotropy [58]. (ii) Scale and pathway misalignment. Decoders often fuse high-resolution skips that propagate aliased high-frequency components, while

low-resolution semantics lack boundary-aware inductive bias. Moreover, skip concatenation yields poorly calibrated multi-scale integration [63]. (iii) Scanner and protocol induced domain shift. For example, learned features frequently encode protocol-correlated patterns [9]. Global attention can aggregate context yet remains weak on blurred interfaces [12]. In addition, frequency domain may attenuate noise at the expense of clinically salient edges [3]. These issues motivate a design that jointly controls aliasing during decimation and structures the fusion of high-resolution evidence so that boundary localization and structural coherence are preserved across sampling regimes and devices.

Hence, we introduce Coset-fibRated micrO-local co-attention Network (CROWn), a framework that integrates sampling theory with representation learning via two complementary components. Microlocal Polyphase Co-Attentive Decimator (μPCAD) performs axis-aware polyphase analysis and co-attention during downsampling. It extracts local extrema and background context, decomposes features into multi-orientation subbands, and computes cross-source attention that treats pooled branches as queries and keys, and wavelet subbands as values. The fusion is recalibrated and then decimated with an explicit anti-aliasing blur, yielding low-resolution embeddings that retain boundary-relevant high-frequency structure while suppressing spurious components. Octaphase Coset Fibration (OCF) restructures skip connections before decoder fusion. High-resolution features are anti-aliased and transformed via 3D space-to-depth into eight interleaved cosets. Phase attention then refines these cosets while an edge-gated term derived from 3D Sobel responses modulates the features [44, 59]. Furthermore, depthwise-separable aggregation produces compact, phase-aligned skips that are semantically closer to the decoder scale and less prone to transmit aliasing. μPCAD and OCF couple microlocal co-attention for alias-aware decimation with coset-fibrated, edge-guided skip calibration, addressing the failure modes of volumetric segmentation under anisotropy and device heterogeneity.

Evaluations across diverse benchmarks show consistent accuracy and boundary quality under heterogeneous sampling. CROWn uses 23.78 M Params and 199.58 G FLOPs. Ablation studies corroborate the effectiveness of the μPCAD and OCF designed, and deploying both modules across stages yields the most stable boundary localization. The main contributions are summarized as follows:

- Proposing CROWn for 3D medical image segmentation, linking polyphase sampling and microlocal analysis with multi-scale feature learning to address aliasing and boundary degradation.
- Designing μPCAD, a decimator that integrates pooling-derived queries/keys with wavelet subband values to perform alias-aware, boundary-preserving downsampling with explicit anti-aliasing.
- Developing OCF to restructure high-resolution skips via octaphase coset decomposition, phase attention, and edge-gated modulation to deliver compact, phase-aligned, boundary-aware skip features.
- Extensive experiments across 15 benchmarks covering CT, MRI, and OCT validate the effectiveness of μPCAD and OCF, along with model complexity reporting.

2. Related Work

In 3D medical image segmentation, CNNs established the voxel-wise paradigm, pioneered by 3D U-Net [6] and V-Net [34] and extended by RAUNet [36], ResUNet [53], SegResNet [35], MultiResUNet [17], HighRes3DNet [23], and uC 3DU-Net [16], while nnU-Net [18] provided a strong, adaptable baseline. Yet pure CNNs are constrained by local receptive fields and anisotropic sampling. To address long-range dependencies, Transformer-based [46] designs have surged: ViT [8] and Swin Transformer [28] enable hierarchical self-attention, and hybrid architecture such as TransUNet [4], TransBTS [47], UNETR [12], SwinUNETR [11], UNETR++ [43], SegFormer3D [40], UNesT [57], Slim UNETR [37], D-Former [49], TransHRNet [54], PHTrans [26], LW-CTrans [20], WaveFormer [1], MAT3D [45] and nnWNet [62] surpass classic CNNs on multi-organ and tumor benchmarks. In parallel, ConvNeXt [29] reexamines convolution, leveraging large kernels and modern normalization and activation, to match or exceed Transformers with better compute and memory efficiency; ConvNeXt-based 3D UX-Net [22] and MedNeXt [42] excel on high-resolution CT and MRI. Most recently, state-space models (SSM) capture long dependencies with linear complexity: Mamba [10] and its vision variants power architectures [27] such as U-Mamba [32], Swin-UMamba [24], SegMamba [50], and SegMamba v2 [52], improved robustness to small lesions and slender anatomical structures.

Despite rapid progress, no prevailing approach jointly delivers global context, fine-grained detail, and deployment-level efficiency under anisotropic sampling. Our method addresses this gap and yields consistent gains on multi-organ and tumor segmentation.

3. The Proposed CROWn

3.1. Overall Framework

To address the inherent challenges in volumetric segmentation e.g., feature corruption from strided operations and information loss under voxel anisotropy, CROWn is proposed, including μPCAD and OCF as shown in Figure 1. μPCAD, by explicitly fusing spatial pooling with wavelet polyphase subbands via co-attention, performs alias-aware decimation while preserving high-frequency boundary details. OCF, marrying octaphase space-to-depth decomposition with edge-gated phase attention, calibrates skip connections

by selectively propagating phase-aligned, boundary-aware features to bridge the semantic gap to the decoder.

3.2. Microlocal Polyphase Co-Attentive Decimator

Aliasing under anisotropic voxel spacing and the misalignment of high-resolution evidence across scale transitions complicate volumetric downsampling. To control phase folding while conserving boundary cues, μPCAD is introduced that couples slice-wise polyphase analysis with cross-source co-attention and anti-alias prefiltering.

Given an encoder feature $\mathbf{X} \in \mathbb{R}^{B\times C_{\text{in}}\times D\times H\times W}$, μPCAD processes 2D slices orthogonal to the W-axis. For each slice index $w \in \{0,\dots,W-1\}$, form $\mathbf{X}^{[w]} = \mathbf{X}[:,:,:,:,w] \in \mathbb{R}^{B\times C_{\text{in}}\times D\times H}$. Two 1×1 linear maps produce pooled branches $\widetilde{\mathbf{Q}}^{[w]} = \mathcal{C}_{\max}(\mathbf{X}^{[w]})$ and $\widetilde{\mathbf{K}}^{[w]} = \mathcal{C}_{\text{avg}}(\mathbf{X}^{[w]})$; stride-2 max/avg pooling on the (D,H) lattice yields $\mathbf{Q}^{[w]} = \mathcal{M}_2(\widetilde{\mathbf{Q}}^{[w]})$ and $\mathbf{K}^{[w]} = \mathcal{A}_2(\widetilde{\mathbf{K}}^{[w]})$ with spatial size $\frac{D}{2}\times\frac{H}{2}$. A third 1×1 map, $\widetilde{\mathbf{Z}}^{[w]} = \mathcal{C}_\omega(\mathbf{X}^{[w]})$, feeds a separable Haar transform acting at stride 2 on (D,H): with analysis filters $l = (2^{-1/2}, 2^{-1/2})$ and $h = (2^{-1/2}, -2^{-1/2})$, the subbands $\mathbf{V}^{\sigma,[w]} \in \mathbb{R}^{B\times C_{\text{in}}\times\frac{D}{2}\times\frac{H}{2}}$ for $\sigma \in \{LL, LH, HL, HH\}$ are

$$
\begin{aligned}
\mathbf{V}^{\sigma,[w]}_{b,c,i,j} &= \sum_{u=0}^{1}\sum_{v=0}^{1} \kappa^{\sigma}_{u,v}\ \widetilde{\mathbf{Z}}^{[w]}_{b,c,\,2i+u,\,2j+v},\\
\kappa^{LL} &= l\otimes l, \kappa^{LH} = l\otimes h,\\
\kappa^{HL} &= h\otimes l, \kappa^{HH} = h\otimes h.
\end{aligned}
\tag{1}
$$

Local polyphase fusion concatenates six sources $[\mathbf{Q}^{[w]} \,\|\, \mathbf{K}^{[w]} \,\|\, \mathbf{V}^{LL,[w]} \,\|\, \mathbf{V}^{LH,[w]} \,\|\, \mathbf{V}^{HL,[w]} \,\|\, \mathbf{V}^{HH,[w]}]$ and applies conv followed by MLP to obtain $\mathbf{L}^{[w]} \in \mathbb{R}^{B\times C_{\text{mid}}\times\frac{D}{2}\times\frac{H}{2}}$. In parallel, cross-source co-attention transports subband evidence to the pooled query lattice. Let Π_r be the spatially reduced key/value grid (ratio r). For each head $\mathfrak{h} \in \{1,\dots,H_a\}$, linear maps $\mathbf{W}^Q_{\mathfrak{h}}, \mathbf{W}^K_{\mathfrak{h}}, \mathbf{W}^V_{\mathfrak{h}}$ produce tokens

$$
\begin{aligned}
\mathbf{q}^{[w],\mathfrak{h}}_{b,i,j} &= \mathbf{W}^Q_{\mathfrak{h}}\,\mathbf{Q}^{[w]}_{b,:,i,j},\ \ \mathbf{k}^{[w],\mathfrak{h}}_{b,i',j'} = \mathbf{W}^K_{\mathfrak{h}}\,\mathbf{K}^{[w]}_{b,:,i',j'},\\
\mathbf{v}^{[w],\mathfrak{h}}_{b,i',j'} &= \mathbf{W}^V_{\mathfrak{h}}\,[\mathbf{V}^{LL,[w]} \,\|\, \mathbf{V}^{LH,[w]} \,\|\, \mathbf{V}^{HL,[w]} \,\|\, \mathbf{V}^{HH,[w]}]_{b,:,i',j'}.
\end{aligned}
\tag{2}
$$

Defining $\delta_{\mathfrak{h}}$ as the per-head scaling dimension, the co-attentive aggregation at position (i,j) is

$$
\begin{aligned}
\mathbf{A}^{[w]}_{b,:,i,j} &= \bigoplus_a \Big(\mathbf{Q}^{[w]}, \mathbf{K}^{[w]}, \{\mathbf{V}^{\sigma,[w]}\}_\sigma\Big)\\
&= \sum_{\mathfrak{h}=1}^{H_a} \sum_{(i',j')\in\Pi_r} \frac{\exp\big(\langle \mathbf{q}^{[w],\mathfrak{h}}_{b,i,j}, \mathbf{k}^{[w],\mathfrak{h}}_{b,i',j'}\rangle/\sqrt{\delta_{\mathfrak{h}}}\big)}{\sum_{(u,v)\in\Pi_r}\exp\big(\langle \mathbf{q}^{[w],\mathfrak{h}}_{b,i,j}, \mathbf{k}^{[w],\mathfrak{h}}_{b,u,v}\rangle/\sqrt{\delta_{\mathfrak{h}}}\big)}\ \mathbf{v}^{[w],\mathfrak{h}}_{b,i',j'}.
\end{aligned}
\tag{3}
$$

The subspace combination with low-frequency structure is $\mathbf{F}^{[w]} = \sigma(\alpha)\,\mathbf{L}^{[w]} + \sigma(\beta)\,\mathbf{A}^{[w]} + \gamma\,\mathcal{J}(\mathbf{V}^{LL,[w]})$, where σ is the logistic function and $\mathcal{J}$ aligns channels of LL. Channel-wise squeeze–excitation forms a diagonal gate $\boldsymbol{\rho}^{[w]}$ from global averages $\boldsymbol{\mu}^{[w]}_{b,c} = \frac{4}{DH}\sum_{i,j}\mathbf{F}^{[w]}_{b,c,i,j}$ via two learned linear maps and a sigmoid. Gated fusion $\widehat{\mathbf{F}}^{[w]}_{b,c,i,j} = \boldsymbol{\rho}^{[w]}_{b,c}\,\mathbf{F}^{[w]}_{b,c,i,j}$ is then re-stacked across w to $\widehat{\mathbf{F}} \in \mathbb{R}^{B\times C_{\text{mid}}\times\frac{D}{2}\times\frac{H}{2}\times W}$. Finally, a depthwise W-axis blur $\mathcal{B}_w$ with kernel $k = (-1,0,+1) \mapsto \{1/4, 1/2, 1/4\}$ is applied, followed by a $1\times1\times3$ learned projection–decimator $\mathcal{D}^{(2)}_w$ of stride 2, giving $\mathbf{Y} = \mathcal{D}^{(2)}_w\big(\mathcal{B}_w(\widehat{\mathbf{F}})\big) \in \mathbb{R}^{B\times C_{\text{out}}\times\frac{D}{2}\times\frac{H}{2}\times\frac{W}{2}}$.

A compact microlocal transport writes the entire mapping as a single lattice-indexed form to nest co-attention, polyphase analysis, gating, and W-axis decimation:

$$
\begin{aligned}
\mathbf{Y}_{b,c',i,j,w'} = \sum_{c=1}^{C_{\text{mid}}} \sum_{s\in\{-1,0,1\}} \Theta_{c',c,s} \Bigg\{ \sum_{t\in\{-1,0,1\}} \kappa_t \Bigg[\Big(\sigma(\alpha)\,\Psi_c\big(\mathbf{Q}^{[\bar w]}, \mathbf{K}^{[\bar w]}, \{\mathbf{V}^{\sigma,[\bar w]}\}_\sigma\big)\\
+\ \sigma(\beta) \sum_{\mathfrak{h}=1}^{H_a} \sum_{(i',j')\in\Pi_r} \frac{\exp\big(\langle \mathbf{W}^Q_{\mathfrak{h}}\mathbf{Q}^{[\bar w]}_{b,:,i,j}, \mathbf{W}^K_{\mathfrak{h}}\mathbf{K}^{[\bar w]}_{b,:,i',j'}\rangle/\sqrt{\delta_{\mathfrak{h}}}\big)}{\sum_{(u,v)\in\Pi_r}\exp\big(\langle \mathbf{W}^Q_{\mathfrak{h}}\mathbf{Q}^{[\bar w]}_{b,:,i,j}, \mathbf{W}^K_{\mathfrak{h}}\mathbf{K}^{[\bar w]}_{b,:,u,v}\rangle/\sqrt{\delta_{\mathfrak{h}}}\big)}\\
\times\ \mathbf{W}^V_{\mathfrak{h}}\,[\mathbf{V}^{LL,[\bar w]}_{b,:,i',j'}; \mathbf{V}^{LH,[\bar w]}_{b,:,i',j'}; \mathbf{V}^{HL,[\bar w]}_{b,:,i',j'}; \mathbf{V}^{HH,[\bar w]}_{b,:,i',j'}]\\
+\ \gamma\,\mathcal{J}\big(\mathbf{V}^{LL,[\bar w]}\big)_{b,:,i,j}\Big) \odot \boldsymbol{\rho}^{[\bar w]}_{b,:} \Bigg]_c \Bigg\}\Bigg|_{\bar w = 2w'+s+t},
\end{aligned}
\tag{4}
$$

where Ψ_c denotes the spatial 3×3 mixing plus channel MLP applied to the six-way concatenation, $\kappa_t \in \{1/4, 1/2, 1/4\}$ encodes the fixed W-axis blur, $\Theta_{c',c,s}$ parameterizes the learned $1\times1\times3$ projection–decimator, $\odot$ is channel-wise gating, and $\bar w$ indexes the pre-decimated W-axis lattice. The pooled branches satisfy:

$$
\begin{aligned}
\mathbf{Q}^{[\bar w]}_{b,c,i,j} &= \max_{u,v\in\{0,1\}} \big[\mathcal{C}_{\max}(\mathbf{X}^{[\bar w]})\big]_{b,c,\,2i+u,\,2j+v},\\
\mathbf{K}^{[\bar w]}_{b,c,i,j} &= \tfrac{1}{4}\sum_{u,v\in\{0,1\}} \big[\mathcal{C}_{\text{avg}}(\mathbf{X}^{[\bar w]})\big]_{b,c,\,2i+u,\,2j+v},
\end{aligned}
\tag{5}
$$

and $\mathbf{V}^{\sigma,[\bar w]}$ are given by the Haar sums above; all sums are understood with reflective boundary conditions on indices outside the valid lattice.

μPCAD enlarges the intermediate information flow and fuses phase-resolved spatial and spectral evidence into a coset-aligned, boundary-aware representation, producing a phase-entangled implicit space at the reduced lattice.

3.3. Octaphase Coset Fibration

Cross-scale fusion in encoder–decoder architectures is impeded by alias propagation and phase misalignment when high-resolution skip features are transported onto a coarser decoder lattice. Thus, to regularize this interface under anisotropic sampling and heterogeneous point-spread functions, OCF is introduced as a coset-fibrated transform that performs anti-alias prefiltering, octaphase space-to-depth decomposition, phase-selective aggregation, and edge-gated consolidation.

Let the high-resolution skip $\mathbf{U} \in \mathbb{R}^{B\times C_s\times D\times H\times W}$. A fixed separable low-pass $\mathcal{G}$ with kernel $g(\delta) =$

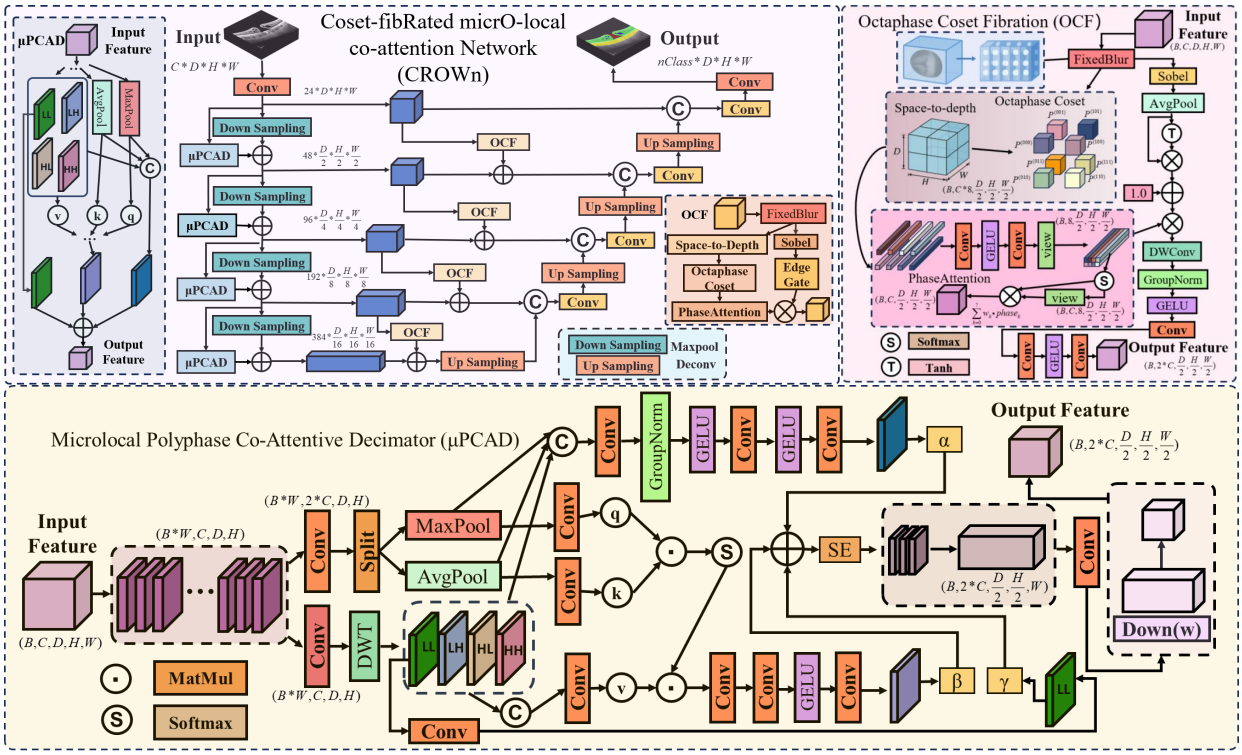

Figure 1. Overview of the proposed CROWn, included μPCAD and OCF. μPCAD performs axis-aware polyphase analysis and pooled–subband co-attention, then applies an explicit anti-alias low-pass to yield alias-suppressed, boundary-preserving features at lower scales. OCF anti-aliases the high-resolution skip, restructures it via 3D space-to-depth into eight cosets, applies phase attention with Sobel-driven edge gating, and aggregates with depthwise–pointwise convs to produce compact, phase-aligned, boundary-aware skips.

$\prod_{\xi\in\{x,y,z\}}\big(\sum_{t=-1}^{1}\omega_t\,\mathbf{1}_{\{\delta_\xi=t\}}\big)$, $\omega_{-1}=\omega_{+1}=1$, $\omega_0=2$, performs anti-alias preconditioning by reflective convolution: $\mathbf{B}=\mathcal{G}*\mathbf{U}$. The base lattice is $\Pi=\{0,\dots,\frac{D}{2}-1\}\times\{0,\dots,\frac{H}{2}-1\}\times\{0,\dots,\frac{W}{2}-1\}$ with eight cosets indexed by $(p,q,r)\in\{0,1\}^3$. The octaphase (space-to-depth) decomposition defines the fiber $\{\mathbf{P}^{pqr}\}_{pqr}$, each $\mathbf{P}^{pqr}\in\mathbb{R}^{B\times C_s\times\frac{D}{2}\times\frac{H}{2}\times\frac{W}{2}}$, by direct coset sampling

$$\mathbf{P}^{pqr}_{b,c,i,j,k} = \mathbf{B}_{b,c,\,2i+p,\,2j+q,\,2k+r} \quad \text{for } (i,j,k)\in\Pi \tag{6}$$

with reflective boundary conditions when indices exceed the original lattice. A phase-context map $\Xi:\mathbb{R}^{8C_s}\to\mathbb{R}^8$ produces logits from the phase-stacked vector $\big[\mathbf{P}^{000}_{b,:,i,j,k};\dots;\mathbf{P}^{111}_{b,:,i,j,k}\big]$; softmax across phases yields normalized weights $\boldsymbol{\omega}_{pqr}(b,i,j,k)=\exp\big(\Xi_{pqr}(\cdot)\big)/\sum_{u,v,w\in\{0,1\}}\exp\big(\Xi_{uvw}(\cdot)\big)$. The denoting phase is mixed by the attention operator $\bigoplus_a$, and the phase-aggregated tensor $\mathbf{Z}\in\mathbb{R}^{B\times C_s\times\frac{D}{2}\times\frac{H}{2}\times\frac{W}{2}}$ is

$$\begin{aligned}\mathbf{Z}_{b,c,i,j,k} &= \bigoplus_a\{\mathbf{P}^{pqr}\}_{pqr}\\ &= \sum_{(p,q,r)\in\{0,1\}^3}\boldsymbol{\omega}_{pqr}(b,i,j,k)\,\mathbf{P}^{pqr}_{b,c,i,j,k}.\end{aligned} \tag{7}$$

An edge magnitude on the original grid is computed from the channel-mean scalar field $\mathbf{A}_{b,d,h,w}=\frac{1}{C_s}\sum_{c=1}^{C_s}\mathbf{U}_{b,c,d,h,w}$ using tri-axial Sobel kernels $\mathcal{K}_x,\mathcal{K}_y,\mathcal{K}_z$:

$$\mathbf{E} = \sqrt{\big(\mathcal{K}_x*\mathbf{A}\big)^2+\big(\mathcal{K}_y*\mathbf{A}\big)^2+\big(\mathcal{K}_z*\mathbf{A}\big)^2+\varepsilon}, \tag{8}$$

which is then pooled to the base lattice by $2\times2\times2$ average, normalized by its spatial mean $\mu_E=\frac{2^3}{DHW}\sum_{i,j,k}\overline{\mathbf{E}}_{b,i,j,k}$, and converted to a scalar gate $\Gamma_{b,i,j,k}=1+\tanh(\eta)\,\overline{\mathbf{E}}_{b,i,j,k}/(\mu_E+\varepsilon)$ with learnable $\eta\in\mathbb{R}$. Depthwise separable consolidation applies a per-channel finite-support kernel $\kappa_c:\{-1,0,1\}^3\to\mathbb{R}$ followed by a pointwise mixing $\mathbf{M}\in\mathbb{R}^{C_{\text{mid}}\times C_s}$ and a second pointwise projection $\mathbf{N}\in\mathbb{R}^{C_{\text{out}}\times C_{\text{mid}}}$ after a nonlinearity ς, giving $\mathbf{G}\in\mathbb{R}^{B\times C_{\text{out}}\times\frac{D}{2}\times\frac{H}{2}\times\frac{W}{2}}$:

$$\begin{aligned}\mathbf{G}_{b,c',i,j,k} = \sum_{m=1}^{C_{\text{mid}}}\mathbf{N}_{c',m}\,\varsigma\Bigg(&\sum_{c=1}^{C_s}\mathbf{M}_{m,c}\sum_{u=-1}^{1}\sum_{v=-1}^{1}\sum_{w=-1}^{1}\kappa_c(u,v,w)\,\Gamma_{b,i,j,k}\\ &\Bigg[\sum_{p,q,r\in\{0,1\}}\boldsymbol{\omega}_{pqr}(b,i,j,k)\,\mathbf{B}_{b,c,\,2(i-u)+p,\,2(j-v)+q,\,2(k-w)+r}\Bigg]\Bigg).\end{aligned} \tag{9}$$

Equivalently, the entire fibration anti-alias prefiltering, coset sampling, phase attention $\bigoplus_a$, edge gating, and depthwise pointwise consolidation, can be expressed as a single transport over the fiber bundle $\pi:\mathcal{F}\to\Pi$ where

$\mathcal{F}_{(i,j,k)} = \{\mathbf{P}^{pqr}_{(\cdot,\cdot,i,j,k)}\}_{pqr}$:

$$\begin{aligned} \mathbf{G} \;=\; \mathbf{N}\,\varsigma\Big(\mathbf{M}\Big(\big(\kappa \star (\Gamma \cdot \bigoplus\nolimits_a \mathsf{lift}_\pi[\mathcal{G} * \mathbf{U}])\big)\Big)\Big), \\ \text{with } (\mathsf{lift}_\pi[\cdot])^{pqr}_{b,c,i,j,k} = \big(\,\cdot\,\big)_{b,c,2i+p,2j+q,2k+r}. \end{aligned} \tag{10}$$

OCF thereby increases intermediate data flow on the skip pathway, aligns phase-offset high-resolution evidence to the decoder lattice, and induces a coset-entangled implicit space that preserves edge-localized detail under resolution reduction.

4. Experiment and Result Analysis

4.1. Datasets

Evaluated our method on 15 publicly available benchmarks spanning CT, MRI, and OCT, including SegTHOR [21], FLARE2022 [33], SKI10 [14], FeTA2021 [39], OIMHS [55], MSD BRATS Tumour [2], MSD Lung Tumour [2], MSD Pancreas Tumour [2], MSD Spleen [2], MSD Colon Cancer [2], HOCMvalvesSeg [60], CrossMoDA2021 [7], SLIVER07 [13], COVID-19 CT Seg [19] and FLARE2021 [31]. The splits of datasets, resolution, and annotation specifics, are described in the Supplementary Material.

4.2. Implementation Details

To standardize input statistics, intensities are clipped, and Min–Max normalization is applied. Identical 3D augmentations are applied for all methods to ensure comparability: random rotation, random shifting, and random scaling, so the benchmark tables reflect architectural behavior rather than augmentation discrepancies. Note that DiceCE loss with AdamW [30] is employed for training. Volumes are randomly cropped into 96×96×96 patches with a batch size of 1, and 320,000 optimization steps are executed. MONAI's 3D sliding-window routine is used as the inference with the same patch size, and outputs are decoded per volume. All experiments are performed on 8 × NVIDIA GeForce RTX 4090 servers under the same environment Python 3.10, PyTorch 2.5.1, CUDA 12.1.

4.3. Comparison with State-of-the-Art Methods

To validate the efficacy of the proposed method, comparative experiments between CROWn and state-of-the-art methods are conducted on 15 publicly available datasets. The evaluation metrics include IoU, Dice and HD95. The experimental results, as shown in Table 1, substantiate the effectiveness of CROWn across these benchmarks.

CROWn shows clear gains on anisotropic cohorts (FLARE2022, MSD Pancreas Tumour) and fine-structure data (OIMHS). The qualitative visual comparisons in Figure 2 corroborate the trend, i.e., CROWn yields crisper, leak-free tumour borders in pancreas, preserves continuous layer interfaces in OIMHS with fewer staircase artifacts, and suppresses spurious fragments in multi-organ FLARE2022.

In terms of overlap metrics, CROWn achieves the highest IoU and Dice across all datasets. From the boundary-error perspective, HD95 are generally reduced, indicating that alias-aware decimation and calibrated skip fusion preserve edge evidence during cross-scale integration.

The results align with the mechanisms of μPCAD and OCF. μPCAD performs polyphase analysis and cross-source co-attention during downsampling, by combining pooled queries/keys with wavelet subband values and applying explicit anti-aliasing. Such design retains boundary-relevant high-frequency content while suppressing spurious components introduced by stride. OCF restructures skip connections via octaphase coset decomposition, phase attention, and edge-gated modulation, thereby aligning high-resolution evidence to the decoder scale before fusion and attenuating alias-propagated high-frequency artifacts. The synergy of μPCAD and OCF not only yields stable overlap, lower boundary deviation, but also improves topology under anisotropic spacing and heterogeneous protocols.

Overall, CROWn achieves robust and consistent optimal performance in overlap metrics, reduces boundary errors, and improves topological coherence. It demonstrates cross-modal robustness across CT, MRI and OCT datasets.

4.4. Ablation Studies

To verify the sampling–alignment hypothesis that underlies CROWn: (i) alias-aware decimation should retain boundary-relevant detail while attenuating stride-induced artifacts (μPCAD); (ii) phase-resolved skip calibration should align high-resolution evidence to the decoder lattice (OCF). We therefore probe four questions per module: cross-backbone insertion, placement (stage-wise along encoder or skips), classic module comparison and attribution (orientation for μPCAD; component ablation for OCF).

4.4.1. Effectiveness of μPCAD

(1) Stage-wise placement on the encoder. We compare inserting μPCAD at a single encoder stage versus deploying it at all encoder stages on the MSD Lung Tumour. As shown in the Supplementary Material Table S2, placing μPCAD everywhere produces the most stable improvements. It indicates that alias control is beneficial at each decimation interface rather than only at a particular depth.

(2) Qualitative impact of μPCAD across backbones. Augmenting CNN, Transformer, ConvNeXt and Mamba baselines with μPCAD consistently improves overlap and boundary metrics across the MSD Pancreas Tumour and FLARE2022 (Table S3 in the Supplementary Material). Across pancreatic tumour and multi-organ CT examples, as shown in Figure S1 (Supplementary Material), inserting μPCAD into classical backbones produces segmentations that more sharper, more continuous boundaries with

Table 1. Comparison with state-of-the-art 3D medical image segmentation methods on 15 public benchmarks. CROWn attains the best IoU and Dice on all datasets, with clear gains on anisotropic cohorts and fine-structure data, demonstrating strong cross-modality robustness.

Method	Source	SegTHOR			FLARE2022			SKI10			FeTA2021			OIMHS		
		IoU	Dice	HD95	IoU	Dice	HD95	IoU	Dice	HD95	IoU	Dice	HD95	IoU	Dice	HD95
3D U-Net [6]	MICCAI 2016	83.46	90.66	2.87	80.17	87.87	10.98	78.46	86.73	3.51	78.54	87.79	2.41	87.69	93.18	2.91
V-Net [34]	3DV 2016	82.35	89.96	3.02	71.20	80.77	45.66	38.18	46.62	-	48.65	62.54	-	80.18	88.26	6.32
3D UX-Net [22]	ICLR 2023	83.36	90.67	3.21	80.44	87.98	6.32	78.05	86.31	3.42	78.70	87.90	2.33	88.37	93.55	2.87
UNETR [12]	WACV 2022	80.25	88.59	3.83	73.74	82.83	13.68	76.46	85.25	4.72	77.41	86.99	2.58	85.65	91.85	4.36
SwinUNETR [11]	MICCAI 2022	83.14	90.43	3.16	80.57	88.18	12.76	77.53	85.84	4.18	78.25	87.58	2.47	88.15	93.44	3.34
nnFormer [61]	TIP 2023	77.90	86.95	4.25	71.55	81.32	18.80	76.52	85.29	4.13	78.38	87.70	2.38	73.03	82.27	19.25
MedNeXt [42]	MICCAI 2023	81.82	89.59	3.90	78.57	86.83	6.55	78.67	86.87	3.41	78.78	87.95	2.32	87.19	92.78	2.20
SegFormer3D [40]	CVPR 2024	78.66	87.51	4.30	71.51	80.99	22.50	69.54	79.30	-	76.38	86.38	2.58	82.89	90.02	3.64
SegMamba [50]	MICCAI 2024	83.64	90.78	2.97	81.58	88.86	9.21	78.42	86.70	3.43	78.96	88.08	2.29	88.83	93.83	2.66
UNesT [57]	MedIA 2023	83.38	90.62	2.94	80.58	88.31	8.37	78.25	86.54	3.41	78.82	87.99	2.32	88.69	93.76	2.72
SwinSMT [41]	MICCAI 2024	82.94	90.36	3.24	78.63	86.65	15.83	77.78	86.16	3.81	77.95	87.36	2.52	88.13	93.40	2.92
VSmTrans [25]	MedIA 2024	82.85	90.34	3.09	80.66	88.17	6.77	73.49	82.53	12.06	75.90	86.06	2.82	88.56	93.70	2.62
SegTom [38]	JBHI 2025	81.77	89.59	3.29	75.41	84.29	10.13	78.49	86.74	3.26	78.71	87.92	2.36	85.07	91.49	5.19
nnWNet [62]	CVPR 2025	82.73	90.25	3.03	69.60	79.69	-	43.29	51.88	-	29.40	40.65	-	77.81	86.82	15.02
SuperLightNet [56]	CVPR 2025	82.68	90.15	3.03	78.25	86.51	15.38	78.26	86.58	3.48	78.23	87.60	2.41	83.85	90.62	3.50
DiffUNet [51]	MedIA 2025	83.49	90.72	2.96	81.44	88.92	11.53	79.03	87.13	3.11	78.73	87.92	2.30	88.80	93.82	3.77
HiPaSNet [5]	Nat.Com 2025	82.55	90.15	3.24	77.61	85.95	12.62	77.47	85.98	4.26	78.71	87.92	2.36	87.50	93.00	2.83
CROWn(Ours)	-	84.05	91.05	2.86	82.65	89.76	4.30	79.16	87.26	3.12	79.04	88.13	2.30	89.68	94.36	2.60

Method	Source	MSD BRATS Tunour			MSD Lung Tumour			MSD Pancreas			MSD Spleen			MSD Colon Cancer		
		IoU	Dice	HD95	IoU	Dice	HD95	IoU	Dice	HD95	IoU	Dice	HD95	IoU	Dice	HD95
3D U-Net [6]	MICCAI 2016	67.24	78.74	4.93	58.93	73.20	79.68	54.14	67.99	26.36	91.84	95.74	1.05	42.90	55.69	96.14
V-Net [34]	3DV 2016	32.83	40.71	-	51.61	64.29	30.44	47.92	61.59	-	87.39	93.23	17.21	23.59	34.00	145.65
3D UX-Net [22]	ICLR 2023	65.82	77.65	4.73	56.76	70.07	43.94	51.53	64.21	40.67	91.37	95.48	1.18	30.23	41.40	88.66
UNETR [12]	WACV 2022	63.05	75.33	7.18	44.43	57.72	129.54	38.80	51.69	25.63	89.84	94.61	1.68	18.91	28.35	127.05
SwinUNETR [11]	MICCAI 2022	66.08	77.87	5.27	59.52	73.29	51.46	50.39	63.43	44.79	91.48	95.53	1.13	33.84	46.41	130.48
nnFormer [61]	TIP 2023	61.65	74.28	6.69	50.01	63.63	49.72	47.83	60.99	24.57	83.83	91.19	68.29	19.31	29.95	214.26
MedNeXt [42]	MICCAI 2023	66.71	78.39	4.90	53.74	67.39	73.46	53.49	67.25	11.02	90.66	95.09	1.23	33.75	46.35	63.54
SegFormer3D [40]	CVPR 2024	52.94	65.44	-	39.58	53.50	127.71	46.15	59.48	-	76.68	86.37	4.67	30.46	42.43	77.79
SegMamba [50]	MICCAI 2024	67.24	78.75	4.91	57.14	70.97	44.35	54.85	67.69	17.67	92.38	96.03	1.18	38.99	52.61	95.38
UNesT [57]	MedIA 2023	65.41	77.33	5.18	57.44	70.41	20.56	51.40	65.04	14.17	91.84	95.74	1.10	39.03	50.76	63.78
SwinSMT [41]	MICCAI 2024	65.04	77.05	5.25	58.88	73.06	51.99	49.29	62.67	31.93	90.73	95.13	1.14	35.03	46.94	97.71
VSmTrans [25]	MedIA 2024	60.91	73.48	8.16	58.93	72.43	29.96	55.09	68.53	42.56	91.96	95.79	5.79	41.26	54.56	85.15
SegTom [38]	JBHI 2025	65.95	77.70	5.35	55.91	69.27	42.23	49.38	62.60	-	91.03	95.28	17.65	36.60	48.96	105.63
nnWNet [62]	CVPR 2025	32.27	39.96	-	51.08	64.67	16.47	47.78	60.49	-	90.31	94.83	1.66	27.04	37.81	99.94
SuperLightNet [56]	CVPR 2025	67.09	78.75	4.71	53.91	67.95	74.95	53.26	67.09	15.20	91.10	95.32	1.23	35.64	48.77	84.79
DiffUNet [51]	MedIA 2025	67.29	78.77	4.74	57.67	71.35	20.56	55.27	68.46	-	92.09	95.86	1.13	39.52	52.41	91.14
HiPaSNet [5]	Nat.Com 2025	67.35	78.90	4.79	53.88	67.33	46.58	53.09	66.57	66.52	91.62	95.61	1.27	35.33	47.58	134.45
CROWn(Ours)	-	67.61	79.07	4.71	60.46	73.63	14.66	56.68	70.20	11.72	92.65	96.17	1.18	43.80	55.89	75.99

Method	Source	HOCMvalvesSeg			CrossMoDA2021			SLIVER07			COVID-19 CT Seg			FLARE2021		
		IoU	Dice	HD95	IoU	Dice	HD95	IoU	Dice	HD95	IoU	Dice	HD95	IoU	Dice	HD95
3D U-Net [6]	MICCAI 2016	74.21	84.09	11.98	67.95	79.76	1.97	87.46	93.10	48.23	71.50	81.92	51.96	88.67	93.50	5.81
V-Net [34]	3DV 2016	58.49	71.90	29.67	68.08	79.65	2.10	83.03	90.46	71.60	8.78	13.68	-	77.00	85.12	14.59
3D UX-Net [22]	ICLR 2023	74.30	84.19	11.99	66.79	78.76	2.60	90.62	95.03	26.23	71.44	81.75	57.31	88.97	93.66	4.47
UNETR [12]	WACV 2022	70.89	81.63	13.41	61.29	74.39	10.95	87.12	93.02	76.41	62.38	74.20	61.26	85.88	91.52	6.24
SwinUNETR [11]	MICCAI 2022	73.51	83.62	12.84	69.18	80.49	6.36	91.31	95.42	25.15	70.29	80.97	81.29	88.84	93.61	5.22
nnFormer [61]	TIP 2023	68.38	79.89	17.94	20.00	26.04	-	86.81	92.86	72.59	67.52	79.07	50.66	79.86	86.50	11.61
MedNeXt [42]	MICCAI 2023	73.44	83.53	12.11	67.25	78.93	1.84	89.88	94.55	51.30	70.06	80.55	34.54	89.27	93.91	2.33
SegFormer3D [40]	CVPR 2024	71.74	82.48	13.14	53.54	68.00	3.80	84.40	90.89	43.97	49.07	57.82	36.17	85.87	91.83	8.93
SegMamba [50]	MICCAI 2024	74.13	84.09	11.96	67.65	79.29	10.46	91.18	95.33	13.90	71.73	81.42	49.95	89.02	93.73	8.53
UNesT [57]	MedIA 2023	73.94	83.93	12.48	68.61	80.15	1.92	89.35	94.28	34.35	69.81	80.39	45.62	89.28	93.90	2.50
SwinSMT [41]	MICCAI 2024	74.14	84.06	11.63	68.99	80.40	10.22	89.89	94.62	28.22	68.81	79.55	46.39	88.66	93.56	3.25
VSmTrans [25]	MedIA 2024	73.38	83.45	13.43	67.32	79.20	14.83	91.35	95.46	27.07	64.31	75.53	81.06	88.25	93.17	19.65
SegTom [38]	JBHI 2025	69.59	80.58	14.75	67.58	79.42	1.95	83.52	90.43	58.13	62.88	74.49	67.64	87.66	92.88	2.94
nnWNet [62]	CVPR 2025	60.94	73.51	-	64.52	76.99	8.65	82.91	90.42	90.69	12.23	17.98	-	69.50	77.53	29.30
SuperLightNet [56]	CVPR 2025	71.18	81.84	13.67	64.09	76.39	23.96	89.87	94.61	16.95	72.62	82.87	36.32	86.91	92.30	8.34
DiffUNet [51]	MedIA 2025	73.96	83.96	12.48	68.51	80.05	1.80	90.24	94.81	41.17	71.09	81.63	60.21	88.71	93.59	4.80
HiPaSNet [5]	Nat.Com 2025	71.93	82.52	14.40	68.48	79.99	9.53	89.55	94.35	35.93	70.54	81.43	37.47	88.85	93.59	2.44
CROWn(Ours)	-	74.84	84.63	11.56	69.27	80.65	1.77	91.68	95.63	26.45	73.91	83.75	32.50	89.33	94.00	5.35

fewer leaks, holes and better preservation of small structures. Gains are larger for backbones whose native downsampling is more alias-prone, supporting the view that μPCAD's pooled subband co-attention and explicit low-pass effectively retain boundary-relevant detail while suppressing stride-induced artifacts. The result indicates that polyphase-aware, co-attentive decimation is broadly complementary rather than architecture-specific.

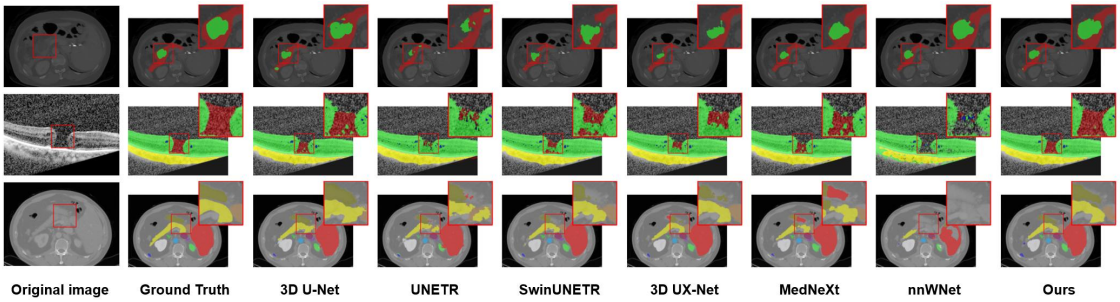

Figure 2. Qualitative comparison on the MSD Pancreas Tumour, OIMHS, and FLARE2022.

(3) Versus classic modules. With 3D U-Net as the backbone, SE [15], CBAM [48], Transformer [46], UXNet block [22], MedNeXt block [42], or μPCAD is added into the encoder on the OIMHS. As shown in Table 2 and Figure 3, Figure S2 (Supplementary Material), while generic channel/spatial reweighting or larger-kernel updates help, μPCAD yields the strongest boundary profile, i.e., alias-aware decimation is more valuable than capacity-only upgrades when voxels are anisotropic. μPCAD directly manages decimation by combining pooled queries/keys with wavelet subband values and an explicit anti-alias to better preserve edge detail under anisotropy.

Table 2. Comparison of μPCAD with classic modules.

Method	OIMHS			
	IoU	Dice	ASSD	HD95
3D U-Net [6]	87.69±2.79	93.18±1.75	0.54±0.57	2.91±5.45
+SE [15]	88.88±2.73	93.89±1.68	0.53±0.52	2.84±5.26
+CBAM [48]	88.56±3.06	93.69±1.92	0.47±0.50	2.81±5.14
+Transformer [46]	88.26±3.10	93.50±1.96	0.69±0.68	2.99±5.43
+UXNet Block [22]	88.63±2.76	93.74±1.72	0.61±0.56	2.90±5.39
+MedNeXt Block [42]	88.79±2.86	93.83±1.77	0.52±0.52	2.83±5.25
+μPACD(Ours)	89.31±2.86	94.14±1.74	0.44±0.36	2.43±4.28

(4) Axis-wise orientation. An internal ablation examined μPCAD variants expanding along the D, H, and W-axis on the OIMHS. The W-axis configuration achieved the best trade-off across overlap, boundary, and topology metrics (Table 3). μPCAD's polyphase analysis and co-attentive fusion route microlocal high-frequency evidence while suppressing spurious phase components propagated by stride, which aligns with the improvements observed in overlap, boundary, and topology.

Table 3. Axis-wise analysis about μPCAD.

Method	OIMHS				
	IoU	Dice	ASSD	HD95	Adj-Rand
(D)	88.98±3.22	93.93±2.03	0.43±0.48	2.68±4.97	93.44±2.07
(H)	88.43±3.20	93.62±1.98	0.66±0.71	2.88±5.32	93.09±2.05
Ours(W)	89.68±2.61	94.36±1.56	0.42±0.46	2.60±4.99	93.92±1.64

Overall, by co-attending pooling-derived queries and keys with wavelet subband values and applying an explicit low-pass, μPCAD empirically reduces stride-induced aliasing across backbones and datasets, with especially clear and stable boundaries along the thick-slice axis.

4.4.2. Effectiveness of OCF

(1) Stage-wise placement on skip connections. As shown in Table S4 in the Supplementary Material, applying OCF to a single skip versus to all skips shows the latter is better. It supports phase-calibrated transport at every fusion point, not just near the bottleneck or the highest resolution.

(2) Qualitative impact of OCF across backbones. As shown in Table S5 and Figure S3 (Supplementary Material), augmenting diverse baselines with OCF on MSD Pancreas Tumour and FLARE2022 consistently improves overlap and reduces boundary errors. The effect is particularly notable on models with skip-fusion instability, i.e., octaphase space-to-depth with phase attention provides decoder-scale that is easier to fuse.

(3) Versus classic modules. With 3D U-Net, enriching the skip with SE [15], CBAM [48], Transformer [46], UXNet block [22], and MedNeXt block [42] is compared against equipping the skip pathway with OCF on OIMHS dataset. As shown in Table 4 and Figure 4, Figure S4 (Supplementary Material), OCF achieves a more favorable overlap–boundary trade-off, and correcting cross-scale phase alignment on the skip pathway is more impactful for boundary fidelity than classic modules.

Table 4. Comparison of OCF with classic modules.

Method	OIMHS			
	IoU	Dice	ASSD	HD95
3D U-Net [6]	87.69±2.79	93.18±1.75	0.54±0.57	2.91±5.45
+SE [15]	88.22±3.05	93.49±1.90	0.58±0.54	2.86±4.71
+CBAM [48]	88.39±3.11	93.49±1.90	0.58±0.54	2.86±4.71
+Transformer [46]	88.49±3.14	93.64±1.96	0.48±0.52	2.82±5.31
+UXNet Block [22]	88.37±2.90	93.58±1.81	0.56±0.53	2.82±5.12
+MedNeXt Block [42]	88.75±3.01	93.81±1.85	0.64±0.67	2.88±5.63
+OCF(Ours)	88.89±3.07	93.88±1.92	0.48±0.43	2.64±4.71

(4) Component attribution inside OCF. A detailed component study on FLARE2022 is summarized in Table 5.

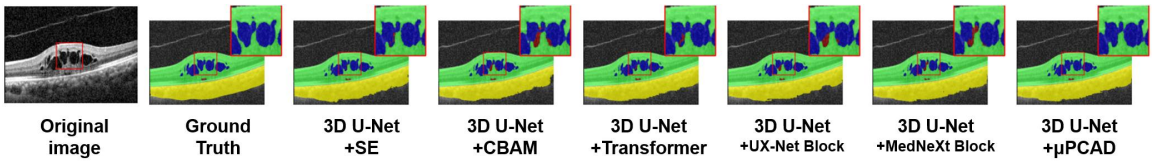

Figure 3. Qualitative comparison of μPCAD on the OIMHS dataset.

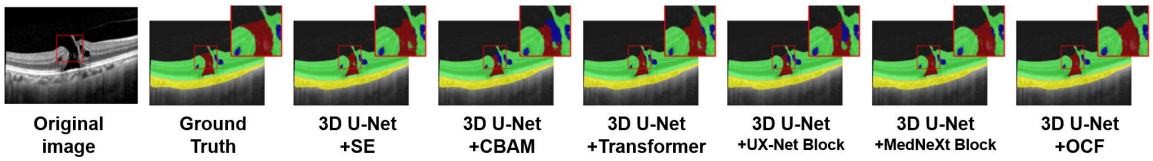

Figure 4. Qualitative comparison of OCF on the OIMHS dataset.

Removing the anti-alias prefilter, enforcing uniform (non-attentive) phase mixing, shuffling coset phases, or dropping the edge gate each degrades the effectiveness of the full OCF. The full configuration (anti-aliasing, octaphase decomposition, phase attention, edge-gated consolidation) contributes additively, which confirm that spectral preconditioning and phase-selective transport are both necessary for stable skip fusion.

Table 5. Phase anti-aliasing about OCF.

Method	FLARE2022				
	IoU	Dice	ASSD	HD95	Adj-Rand
w/o Blur	81.96±8.62	89.15±6.24	1.33±1.07	4.46±5.00	89.10±6.27
w/o phase attention	81.94±7.69	89.26±5.46	1.27±1.10	5.33±5.46	89.21±5.48
Fixed displacement phase	81.53±9.02	88.80±6.62	1.22±1.09	4.62±5.27	88.75±6.64
Ours	82.65±7.20	89.76±5.03	1.17±0.96	4.30±4.93	89.70±5.04

Overall, OCF effectively regularizes high-resolution skip fusion through octaphase space-to-depth decomposition, phase-selective attention, and edge gating. These mechanisms jointly suppress alias propagation and misalignment, yielding phase-coherent feature integration and enhanced boundary fidelity.

4.5. Model Complexity Comparison

To assess computational efficiency, the parameter counts and FLOPs are reported with the htop Python library, using an input of 96×96×96, as shown in Table 6. CROWn uses 23.78M parameters with 199.58G FLOPs. While smaller models reduce computation, their metrics in Table 1 are generally lower. Conversely, high-capacity designs increase parameters and FLOPs without consistent gains across datasets. The parameter–accuracy trade-off of CROWn is favorable i.e., its computational overhead is markedly below heavy stacks such as 3D UX-Net[22], SegMamba[50] and nnWNet[62], yet its accuracy and boundary/topology measures remain competitive. This efficiency is consistent with the design intent of μPCAD and OCF: alias-aware decimation concentrates capacity at scale transitions instead of deeper or wider backbones, and coset-fibrated, phase-aligned skips reduce redundant high-resolution channels before fusion. Therefore, CROWn avoids the bulk of large Transformers while mitigating the global-modeling limitations of CNNs. It offers moderate computational overhead with the accuracy and structural consistency.

Table 6. Model size and compute. Parameter and FLOPs of representative 3D medical segmentation models for a 96×96×96 input.

Method	Params	FLOPs	Method	Params	FLOPs
3D U-Net [6]	5.75 M	135.88 G	V-Net [34]	45.61 M	331.10 G
3D UX-Net [22]	53.00 M	631.76 G	UNETR [12]	92.62 M	82.58 G
SwinUNETR [11]	61.99 M	329.46 G	nnFormer [61]	149.10 M	224.36 G
MedNeXt [42]	11.64 M	174.10 G	SegFormer3D [40]	4.49 M	4.97G
SegMamba [50]	64.24 M	655.62 G	UNesT [57]	84.88 M	258.11 G
SwinSMT [41]	15.51 M	83.71 G	VSmTrans [25]	49.86 M	358.89 G
SegTom [38]	3.85 M	49.71 G	nnWNet [62]	52.23 M	648.26 G
SuperLightNet [56]	2.75 M	19.52 G	DiffUNet [51]	178.12 M	6333.85 G
HiPaSNet [5]	6.40 M	123.58 G	Ours	23.78 M	199.58 G

5. Conclusion

This paper introduces CROWn, a volumetric segmentation framework that couples sampling theory with representation learning to handle heterogeneous spacing and pronounced anisotropy. μPCAD performs alias-aware downsampling by fusing pooled descriptors with wavelet subbands, preserving boundary-relevant high frequencies while suppressing stride artifacts. OCF anti-aliases and phase-aligns skip features via space-to-depth decomposition, phase attention, and edge-gated modulation. Together, these modules yield precise local delineation and stable global structure through calibrated multi-scale fusion. Across 15 publicly available datasets covering CT, MRI, and OCT, CROWn delivers consistent gains in overlap, boundary, and topology metrics. Future work includes stronger multimodal fusion with adaptive modality weighting, and transfer and domain adaptation such as self-supervised pretraining and test-time adaptation. We also plan uncertainty-aware boundary supervision and topology-guided skip selection for finer structures.

References

[1] Md Mahfuz Al Hasan, Mahdi Zaman, Abdul Jawad, Alberto Santamaria-Pang, Ho Hin Lee, Ivan Tarapov, Kyle B See, Md Shah Imran, Antika Roy, Yaser Pourmohammadi Fallah, et al. Waveformer: A 3d transformer with wavelet-driven feature representation for efficient medical image segmentation. In *International Conference on Medical Image Computing and Computer-Assisted Intervention*, pages 684–694. Springer, 2025. 2

[2] Michela Antonelli, Annika Reinke, Spyridon Bakas, Keyvan Farahani, Annette Kopp-Schneider, Bennett A Landman, Geert Litjens, Bjoern Menze, Olaf Ronneberger, Ronald M Summers, et al. The medical segmentation decathlon. *Nature communications*, 13(1):4128, 2022. 5

[3] Joan Bruna and Stéphane Mallat. Invariant scattering convolution networks. *IEEE transactions on pattern analysis and machine intelligence*, 35(8):1872–1886, 2013. 2

[4] Jieneng Chen, Yongyi Lu, Qihang Yu, Xiangde Luo, Ehsan Adeli, Yan Wang, Le Lu, Alan L Yuille, and Yuyin Zhou. Transunet: Transformers make strong encoders for medical image segmentation. *arXiv preprint arXiv:2102.04306*, 2021. 2

[5] Yuetan Chu, Gongning Luo, Longxi Zhou, Shaodong Cao, Guolin Ma, Xianglin Meng, Juexiao Zhou, Changchun Yang, Dexuan Xie, Dan Mu, et al. Deep learning-driven pulmonary artery and vein segmentation reveals demography-associated vasculature anatomical differences. *Nature Communications*, 16(1):2262, 2025. 6, 8

[6] Özgün Çiçek, Ahmed Abdulkadir, Soeren S Lienkamp, Thomas Brox, and Olaf Ronneberger. 3d u-net: learning dense volumetric segmentation from sparse annotation. In *International conference on medical image computing and computer-assisted intervention*, pages 424–432. Springer, 2016. 2, 6, 7, 8

[7] Reuben Dorent, Aaron Kujawa, Marina Ivory, Spyridon Bakas, Nicola Rieke, Samuel Joutard, Ben Glocker, Jorge Cardoso, Marc Modat, Kayhan Batmanghelich, et al. Crossmoda 2021 challenge: Benchmark of cross-modality domain adaptation techniques for vestibular schwannoma and cochlea segmentation. *Medical Image Analysis*, 83:102628, 2023. 5

[8] Alexey Dosovitskiy. An image is worth 16x16 words: Transformers for image recognition at scale. In *The Eleventh International Conference on Learning Representations*, 2020. 2

[9] Qi Dou, Cheng Ouyang, Cheng Chen, Hao Chen, and Pheng-Ann Heng. Unsupervised cross-modality domain adaptation of convnets for biomedical image segmentations with adversarial loss. In *Proceedings of the 27th International Joint Conference on Artificial Intelligence (IJCAI)*, pages 691–697, 2018. 1, 2

[10] Albert Gu and Tri Dao. Mamba: Linear-time sequence modeling with selective state spaces. In *First conference on language modeling*, 2024. 2

[11] Ali Hatamizadeh, Vishwesh Nath, Yucheng Tang, Dong Yang, Holger R Roth, and Daguang Xu. Swin unetr: Swin transformers for semantic segmentation of brain tumors in mri images. In *International MICCAI brainlesion workshop*, pages 272–284. Springer, 2021. 2, 6, 8

[12] Ali Hatamizadeh, Yucheng Tang, Vishwesh Nath, Dong Yang, Andriy Myronenko, Bennett Landman, Holger R Roth, and Daguang Xu. Unetr: Transformers for 3d medical image segmentation. In *Proceedings of the IEEE/CVF winter conference on applications of computer vision*, pages 574–584, 2022. 1, 2, 6, 8

[13] Tobias Heimann, Bram Van Ginneken, Martin A Styner, Yulia Arzhaeva, Volker Aurich, Christian Bauer, Andreas Beck, Christoph Becker, Reinhard Beichel, György Bekes, et al. Comparison and evaluation of methods for liver segmentation from ct datasets. *IEEE transactions on medical imaging*, 28(8):1251–1265, 2009. 5

[14] Tobias Heimann, Bryan J Morrison, Martin A Styner, Marc Niethammer, and Simon Warfield. Segmentation of knee images: a grand challenge. In *Proc. MICCAI Workshop on Medical Image Analysis for the Clinic*. Beijing, China, 2010. 5

[15] Jie Hu, Li Shen, and Gang Sun. Squeeze-and-excitation networks. In *Proceedings of the IEEE conference on computer vision and pattern recognition*, pages 7132–7141, 2018. 7

[16] Xingru Huang, Jian Huang, Tianyun Zhang, HE HONG, Shaowei Jiang, Yaoqi Sun, et al. Upping the game: How 2d u-net skip connections flip 3d segmentation. *Advances in Neural Information Processing Systems*, 37:87282–87309, 2024. 2

[17] Nabil Ibtehaz and M Sohel Rahman. Multiresunet: Rethinking the u-net architecture for multimodal biomedical image segmentation. *Neural networks*, 121:74–87, 2020. 2

[18] Fabian Isensee, Paul F Jaeger, Simon AA Kohl, Jens Petersen, and Klaus H Maier-Hein. nnu-net: a self-configuring method for deep learning-based biomedical image segmentation. *Nature methods*, 18(2):203–211, 2021. 1, 2

[19] Ma Jun, Ge Cheng, Wang Yixin, An Xingle, Gao Jiantao, Yu Ziqi, Zhang Minqing, Liu Xin, Deng Xueyuan, Cao Shucheng, et al. Covid-19 ct lung and infection segmentation dataset. *(No Title)*, 2020. 5

[20] Hulin Kuang, Yahui Wang, Xianzhen Tan, Jialin Yang, Jiarui Sun, Jin Liu, Wu Qiu, Jingyang Zhang, Jiulou Zhang, Chunfeng Yang, et al. Lw-ctrans: A lightweight hybrid network of cnn and transformer for 3d medical image segmentation. *Medical Image Analysis*, 102:103545, 2025. 2

[21] Zoé Lambert, Caroline Petitjean, Bernard Dubray, and Su Kuan. Segthor: Segmentation of thoracic organs at risk in ct images. In *2020 Tenth International Conference on Image Processing Theory, Tools and Applications (IPTA)*, pages 1–6. Ieee, 2020. 5

[22] Ho Hin Lee, Shunxing Bao, Yuankai Huo, and Bennett A Landman. 3d ux-net: A large kernel volumetric convnet modernizing hierarchical transformer for medical image segmentation. In *The Eleventh International Conference on Learning Representations*, 2023. 2, 6, 7, 8

[23] Wenqi Li, Guotai Wang, Lucas Fidon, Sebastien Ourselin, M Jorge Cardoso, and Tom Vercauteren. On the compactness, efficiency, and representation of 3d convolutional networks: brain parcellation as a pretext task. In *International*

conference on information processing in medical imaging, pages 348–360. Springer, 2017. 2

[24] Jiarun Liu, Hao Yang, Hong-Yu Zhou, Yan Xi, Lequan Yu, Cheng Li, Yong Liang, Guangming Shi, Yizhou Yu, Shaoting Zhang, et al. Swin-umamba: Mamba-based unet with imagenet-based pretraining. In *International conference on medical image computing and computer-assisted intervention*, pages 615–625. Springer, 2024. 2

[25] Tiange Liu, Qingze Bai, Drew A Torigian, Yubing Tong, and Jayaram K Udupa. Vsmtrans: A hybrid paradigm integrating self-attention and convolution for 3d medical image segmentation. *Medical image analysis*, 98:103295, 2024. 6, 8

[26] Wentao Liu, Tong Tian, Weijin Xu, Huihua Yang, Xipeng Pan, Songlin Yan, and Lemeng Wang. Phtrans: Parallelly aggregating global and local representations for medical image segmentation. In *International Conference on Medical Image Computing and Computer-Assisted Intervention*, pages 235–244. Springer, 2022. 2

[27] Yue Liu, Yunjie Tian, Yuzhong Zhao, Hongtian Yu, Lingxi Xie, Yaowei Wang, Qixiang Ye, Jianbin Jiao, and Yunfan Liu. Vmamba: Visual state space model. *Advances in neural information processing systems*, 37:103031–103063, 2024. 2

[28] Ze Liu, Yutong Lin, Yue Cao, Han Hu, Yixuan Wei, Zheng Zhang, Stephen Lin, and Baining Guo. Swin transformer: Hierarchical vision transformer using shifted windows. In *Proceedings of the IEEE/CVF international conference on computer vision*, pages 10012–10022, 2021. 2

[29] Zhuang Liu, Hanzi Mao, Chao-Yuan Wu, Christoph Feichtenhofer, Trevor Darrell, and Saining Xie. A convnet for the 2020s. In *Proceedings of the IEEE/CVF conference on computer vision and pattern recognition*, pages 11976–11986, 2022. 2

[30] Ilya Loshchilov and Frank Hutter. Decoupled weight decay regularization. *arXiv preprint arXiv:1711.05101*, 2017. 5

[31] Jun Ma, Yao Zhang, Song Gu, Xingle An, Zhihe Wang, Cheng Ge, Congcong Wang, Fan Zhang, Yu Wang, Yinan Xu, et al. Fast and low-gpu-memory abdomen ct organ segmentation: the flare challenge. *Medical Image Analysis*, 82: 102616, 2022. 5

[32] Jun Ma, Feifei Li, and Bo Wang. U-mamba: Enhancing long-range dependency for biomedical image segmentation. *arXiv preprint arXiv:2401.04722*, 2024. 2

[33] Jun Ma, Yao Zhang, Song Gu, Cheng Ge, Shihao Mae, Adamo Young, Cheng Zhu, Xin Yang, Kangkang Meng, Ziyan Huang, et al. Unleashing the strengths of unlabelled data in deep learning-assisted pan-cancer abdominal organ quantification: the flare22 challenge. *The Lancet Digital Health*, 6(11):e815–e826, 2024. 5

[34] Fausto Milletari, Nassir Navab, and Seyed-Ahmad Ahmadi. V-net: Fully convolutional neural networks for volumetric medical image segmentation. In *2016 fourth international conference on 3D vision (3DV)*, pages 565–571. Ieee, 2016. 2, 6, 8

[35] Andriy Myronenko. 3d mri brain tumor segmentation using autoencoder regularization. In *International MICCAI brainlesion workshop*, pages 311–320. Springer, 2018. 2

[36] Zhen-Liang Ni, Gui-Bin Bian, Xiao-Hu Zhou, Zeng-Guang Hou, Xiao-Liang Xie, Chen Wang, Yan-Jie Zhou, Rui-Qi Li, and Zhen Li. Raunet: Residual attention u-net for semantic segmentation of cataract surgical instruments. In *International Conference on Neural Information Processing*, pages 139–149. Springer, 2019. 2

[37] Yan Pang, Jiaming Liang, Teng Huang, Hao Chen, Yunhao Li, Dan Li, Lin Huang, and Qiong Wang. Slim unetr: Scale hybrid transformers to efficient 3d medical image segmentation under limited computational resources. *IEEE Transactions on Medical Imaging*, 43(3):994–1005, 2023. 2

[38] Yan Pang, Yunhao Li, Jiaming Liang, Hao Chen, Ying Hu, and Qiong Wang. Segtom: A 3d volumetric medical image segmentation framework for thoracoabdominal multi-organ anatomical structures. *IEEE Journal of Biomedical and Health Informatics*, 2025. 6, 8

[39] Kelly Payette, Priscille de Dumast, Hamza Kebiri, Ivan Ezhov, Johannes C Paetzold, Suprosanna Shit, Asim Iqbal, Romesa Khan, Raimund Kottke, Patrice Grehten, et al. An automatic multi-tissue human fetal brain segmentation benchmark using the fetal tissue annotation dataset. *Scientific data*, 8(1):167, 2021. 5

[40] Shehan Perera, Pouyan Navard, and Alper Yilmaz. Segformer3d: an efficient transformer for 3d medical image segmentation. In *Proceedings of the IEEE/CVF Conference on Computer Vision and Pattern Recognition*, pages 4981–4988, 2024. 2, 6, 8

[41] Szymon Płotka, Maciej Chrabaszcz, and Przemyslaw Biecek. Swin smt: Global sequential modeling for enhancing 3d medical image segmentation. In *International Conference on Medical Image Computing and Computer-Assisted Intervention*, pages 689–698. Springer, 2024. 6, 8

[42] Saikat Roy, Gregor Koehler, Constantin Ulrich, Michael Baumgartner, Jens Petersen, Fabian Isensee, Paul F Jaeger, and Klaus H Maier-Hein. Mednext: transformer-driven scaling of convnets for medical image segmentation. In *International Conference on Medical Image Computing and Computer-Assisted Intervention*, pages 405–415. Springer, 2023. 2, 6, 7, 8

[43] Abdelrahman Shaker, Muhammad Maaz, Hanoona Rasheed, Salman Khan, Ming-Hsuan Yang, and Fahad Shahbaz Khan. Unetr++: delving into efficient and accurate 3d medical image segmentation. *IEEE Transactions on Medical Imaging*, 43(9):3377–3390, 2024. 2

[44] Wenzhe Shi, Jose Caballero, Ferenc Huszár, Johannes Totz, Andrew P Aitken, Rob Bishop, Daniel Rueckert, and Zehan Wang. Real-time single image and video super-resolution using an efficient sub-pixel convolutional neural network. In *Proceedings of the IEEE conference on computer vision and pattern recognition*, pages 1874–1883, 2016. 2

[45] Muhammad Sohaib, Siyavash Shabani, Sahar A Mohammed, Garrett Winkelmaier, and Bahram Parvin. Multi-aperture transformers for 3d (mat3d) segmentation of clinical and microscopic images. In *IEEE Winter Conference on Applications of Computer Vision. IEEE Winter Conference on Applications of Computer Vision*, pages 4352–4361, 2025. 2

[46] Ashish Vaswani, Noam Shazeer, Niki Parmar, Jakob Uszkoreit, Llion Jones, Aidan N Gomez, Łukasz Kaiser, and Illia Polosukhin. Attention is all you need. *Advances in neural information processing systems*, 30, 2017. 2, 7

[47] Wenxuan Wang, Chen Chen, Meng Ding, Hong Yu, Sen Zha, and Jiangyun Li. Transbts: Multimodal brain tumor segmentation using transformer. In *International conference on medical image computing and computer-assisted intervention*, pages 109–119. Springer, 2021. 2

[48] Sanghyun Woo, Jongchan Park, Joon-Young Lee, and In So Kweon. Cbam: Convolutional block attention module. In *Proceedings of the European conference on computer vision (ECCV)*, pages 3–19, 2018. 7

[49] Yixuan Wu, Kuanlun Liao, Jintai Chen, Jinhong Wang, Danny Z Chen, Honghao Gao, and Jian Wu. D-former: A u-shaped dilated transformer for 3d medical image segmentation. *Neural Computing and Applications*, 35(2):1931–1944, 2023. 2

[50] Zhaohu Xing, Tian Ye, Yijun Yang, Guang Liu, and Lei Zhu. Segmamba: Long-range sequential modeling mamba for 3d medical image segmentation. In *International conference on medical image computing and computer-assisted intervention*, pages 578–588. Springer, 2024. 2, 6, 8

[51] Zhaohu Xing, Liang Wan, Huazhu Fu, Guang Yang, Yijun Yang, Lequan Yu, Baiying Lei, and Lei Zhu. Diff-unet: A diffusion embedded network for robust 3d medical image segmentation. *Medical Image Analysis*, page 103654, 2025. 6, 8

[52] Zhaohu Xing, Tian Ye, Yijun Yang, Du Cai, Baowen Gai, Xiao-Jian Wu, Feng Gao, and Lei Zhu. Segmamba-v2: Long-range sequential modeling mamba for general 3d medical image segmentation. *IEEE Transactions on Medical Imaging*, 2025. 2

[53] Wendong Xu, Hong Liu, Xiangdong Wang, and Yueliang Qian. Liver segmentation in ct based on resunet with 3d probabilistic and geometric post process. In *2019 IEEE 4th international conference on signal and image processing (ICSIP)*, pages 685–689. IEEE, 2019. 2

[54] Qingsen Yan, Shengqiang Liu, Songhua Xu, Caixia Dong, Zongfang Li, Javen Qinfeng Shi, Yanning Zhang, and Duwei Dai. 3d medical image segmentation using parallel transformers. *Pattern Recognition*, 138:109432, 2023. 2

[55] Xin Ye, Shucheng He, Xiaxing Zhong, Jiafeng Yu, Shangchao Yang, Yingjiao Shen, Yiqi Chen, Yaqi Wang, Xingru Huang, and Lijun Shen. Oimhs: An optical coherence tomography image dataset based on macular hole manual segmentation. *Scientific Data*, 10(1):769, 2023. 5

[56] Feng Yu, Jiacheng Cao, Li Liu, and Minghua Jiang. Superlightnet: Lightweight parameter aggregation network for multimodal brain tumor segmentation. In *Proceedings of the Computer Vision and Pattern Recognition Conference*, pages 5197–5206, 2025. 6, 8

[57] Xin Yu, Qi Yang, Yinchi Zhou, Leon Y Cai, Riqiang Gao, Ho Hin Lee, Thomas Li, Shunxing Bao, Zhoubing Xu, Thomas A Lasko, et al. Unest: local spatial representation learning with hierarchical transformer for efficient medical segmentation. *Medical Image Analysis*, 90:102939, 2023. 2, 6, 8

[58] Richard Zhang. Making convolutional networks shift-invariant again. In *International conference on machine learning*, pages 7324–7334. PMLR, 2019. 1

[59] Jia-Xing Zhao, Jiang-Jiang Liu, Deng-Ping Fan, Yang Cao, Jufeng Yang, and Ming-Ming Cheng. Egnet: Edge guidance network for salient object detection. In *Proceedings of the IEEE/CVF international conference on computer vision*, pages 8779–8788, 2019. 2

[60] Limin Zheng, Hongyu Chen, Lu Qing, Jian Zhuang, Bo Meng, and Xiaowei Xu. Automatic segmentation of aortic and mitral valves for heart surgical planning of hypertrophic obstructive cardiomyopathy. In *Asian Conference on Machine Learning*, pages 1715–1730. PMLR, 2024. 5

[61] Hong-Yu Zhou, Jiansen Guo, Yinghao Zhang, Xiaoguang Han, Lequan Yu, Liansheng Wang, and Yizhou Yu. nnformer: Volumetric medical image segmentation via a 3d transformer. *IEEE transactions on image processing*, 32: 4036–4045, 2023. 6, 8

[62] Yanfeng Zhou, Lingrui Li, Le Lu, and Minfeng Xu. nnwnet: Rethinking the use of transformers in biomedical image segmentation and calling for a unified evaluation benchmark. In *Proceedings of the Computer Vision and Pattern Recognition Conference*, pages 20852–20862, 2025. 2, 6, 8

[63] Zongwei Zhou, Md Mahfuzur Rahman Siddiquee, Nima Tajbakhsh, and Jianming Liang. Unet++: A nested u-net architecture for medical image segmentation. In *International workshop on deep learning in medical image analysis*, pages 3–11. Springer, 2018. 2