REND=Applied D EURO=0 SINGLE_DOOR=0 FALSE_FRONT=0 GARBAGE_FRONT=0
LEND=Applied FE LIGHTRAIL= PAIR_DOOR=2 DRW_FRONT=1

Panel Stock

Qty	Width	Length	Thick	Description	Material
1	23 1/2	30	11/16	Left Sub End	3/4 PF 2S Map Ply
1	24 1/4	34 3/4	3/4	Fin L End	3/4 MDF
1	23 1/2	30	11/16	Right Sub End	3/4 PF 2S Map Ply
1	36 1/16	30	1/2	Unfin Back	1/2 PF 1S Map P
2	4	35 3/16	11/16	Top Stretcher	3/4 PF 2S Map Ply
1	23 1/2	35 3/16	11/16	Deck	3/4 PF 2S Map Ply
1	4 3/4	21 5/16	11/16	Side Toe	3/4 Paint Grade Pl
1	4 3/4	35 3/16	11/16	Front Toe	3/4 Paint Grade Pl
1	4 3/4	21 5/16	11/16	Side Toe	3/4 Paint Grade Pl
1	3	35 3/16	11/16	Drawer Stretcher	3/4 PF 2S Map Ply
1	29 7/16	20 1/4	1/4	Roll Out Bottom	1/4 PF 1S Maple
2	4 9/16	30 1/4	1/2	Roll Out Drw Front	1/2 PF 1S Map P
1	29 7/16	20 1/4	1/4	Roll Out Bottom	1/4 PF 1S Maple
1	33 9/16	20 1/4	1/4	Drawer Box Bottom	1/4 PF 1S Maple

Board Stock

Qty	Width	Length	Thick	Description	Material
2	4	21	5/8	Roll Out Side	5/8 Drw Stock
1	4	28 15/16	5/8	Roll Out Back	5/8 Drw Stock
1	4	28 15/16	5/8	Roll Out Front	5/8 Drw Stock
2	2	22	2	n Thick Rollout Spac	1in Paint Grade
6	2	22	2	n Thick Rollout Spac	1in Paint Grade
2	4	21	5/8	Roll Out Side	5/8 Drw Stock
1	4	28 15/16	5/8	Roll Out Back	5/8 Drw Stock
1	4	28 15/16	5/8	Roll Out Front	5/8 Drw Stock
1	1 1/2	34 11/16	1	B-Rail	1in Paint Grade
1	1 1/2	34 7/8	1	R-Stile	1in Paint Grade
1	1 1/4	34 11/16	1	T-Rail	1in Paint Grade
1	1 1/2	30 7/8	1	L-Stile	1in Paint Grade
2	4 1/4	21	5/8	Drawer Box Side	5/8 Drw Stock
1	4 1/4	33 1/16	5/8	Drawer Box Back	5/8 Drw Stock
1	4 1/4	33 1/16	5/8	Drawer Box Front	5/8 Drw Stock
1	1 1/2	34 11/16	1	M-Rail	1in Paint Grade

Hinges

Qty	Material
4	Blum 71T9780-Hinge

Hinges Plates

Qty	Material
4	Blum 0mm - 174H7100E

Guides

Qty	Material
3 P	Blum 563H5330C-21"

Drawer Boxes

Qty	Width	Height	Depth
1	34 5/16	4 1/4	21

Roll Outs

Qty	Width	Height	Depth
2	30 3/16	4	21

Drawer Fronts

Qty	Width	Length	Thick
1	34 1/2	5 13/16	1

Doors

Qty	Width	Length	Thick
1	24 1/4	34 3/4	1
2	17 3/16	20 5/16	1

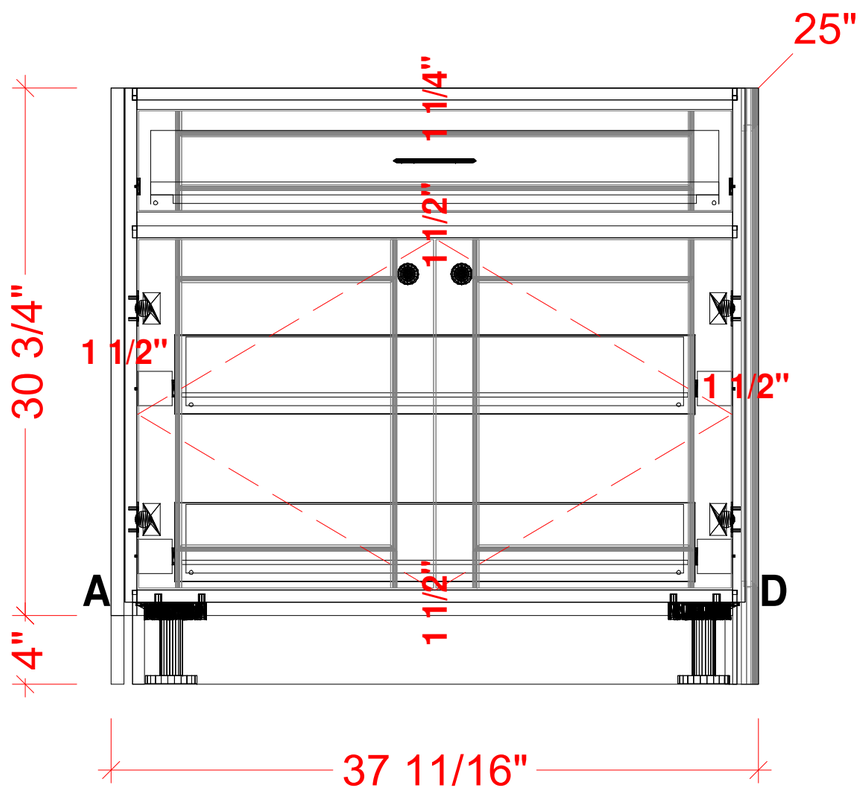

Left End = Applied FE

Right End = Applied D

NOTE:

Job:FLECK KITCHEN Room #BAR - Elev #2 Assembly #14 Ext.Color(GRAVEL GRAY 2127-30) Date: 03/09/22