REND=Unfinished EURO=0 SINGLE_DOOR=0 FALSE_FRONT=0 GARBAGE_FRONT=0
LEND=Unfinished LIGHTRAIL= PAIR_DOOR=0 DRW_FRONT=3

Panel Stock

Qty	Width	Length	Thick	Description	Material
1	19 1/2	30	11/16	Unfin L End	3/4 PF 2S Map Ply
1	19 1/2	30	11/16	Unfin R End	3/4 PF 2S Map Ply
1	20 5/16	30	1/2	Unfin Back	1/2 PF 1S Map P
1	4	19 7/16	11/16	Top Stretcher	3/4 PF 2S Map Ply
1	4	19 7/16	11/16	Top Stretcher	3/4 PF 2S Map Ply
1	19 1/2	19 7/16	11/16	Deck	3/4 PF 2S Map Ply
1	4 3/4	17 5/16	11/16	Sleeper	3/4 Paint Grade Pl
1	4 3/4	20 5/16	11/16	Front Toe	3/4 Paint Grade Pl
1	4 3/4	17 5/16	11/16	Sleeper	3/4 Paint Grade Pl
1	3	19 7/16	11/16	Drawer Stretcher	3/4 PF 2S Map Ply
2	17 3/4	17 1/4	1/4	Drawer Box Bottom	1/4 PF 1S Maple
1	17 3/4	17 1/4	1/4	Drawer Box Bottom	1/4 PF 1S Maple

Board Stock

Qty	Width	Length	Thick	Description	Material
1	1 1/2	18 7/8	1	B-Rail	1in Paint Grade
1	1 1/2	34 7/8	1	R-Stile	1in Paint Grade
1	1 1/4	18 7/8	1	T-Rail	1in Paint Grade
1	4 1/4	18	5/8	Drawer Box Side	5/8 Drw Stock
1	4 1/4	18	5/8	Drawer Box Side	5/8 Drw Stock
1	4 1/4	17 1/4	5/8	Drawer Box Back	5/8 Drw Stock
1	4 1/4	17 1/4	5/8	Drawer Box Front	5/8 Drw Stock
1	1 1/2	18 7/8	1	M-Rail	1in Paint Grade
4	8 1/4	18	5/8	Drawer Box Side	5/8 Drw Stock
2	8 1/4	17 1/4	5/8	Drawer Box Back	5/8 Drw Stock
2	8 1/4	17 1/4	5/8	Drawer Box Front	5/8 Drw Stock

Hinges

Qty	Material

Hinges Plates

Qty	Material

Guides

Qty	Material
3 P	Blum 563H4570C-18"

Drawer Boxes

Qty	Width	Height	Depth
1	18 1/2	4 1/4	18
2	18 1/2	8 1/4	18

Roll Outs

Qty	Width	Height	Depth

Drawer Fronts

Qty	Width	Length	Thick
1	18 11/16	5 13/16	1
2	18 11/16	10 1/16	1

Doors

Qty	Width	Length	Thick

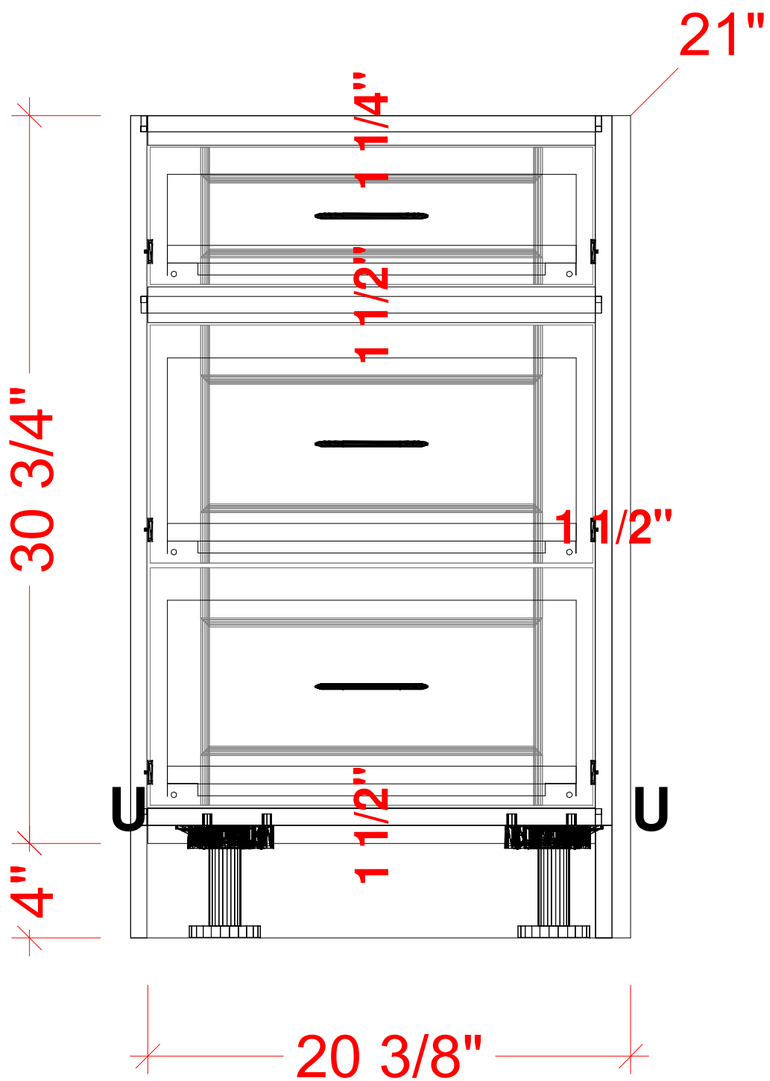

Left End = Unfinished

Right End = Unfinished

NOTE:

Job:NEAMONITIS Room #BATH 3 / KIDS BATH - Elev #2 Assembly #81 Ext.Color(OC-118 SNOWFALL WHITE) Date: 03/09/22