REND=Finished EURO=1 SINGLE_DOOR=0 FALSE_FRONT=1 GARBAGE_FRONT=0
LEND=Finished LIGHTRAIL= PAIR_DOOR=0 DRW_FRONT=2

Panel Stock

Qty	Width	Length	Thick	Description	Material
1	20 1/2	30 1/4	11/16	Fin L End	3/4 PF 2S Map Ply
1	20 1/2	30 1/4	11/16	Fin R End	3/4 PF 2S Map Ply
1	23 5/8	30 1/4	1/2	Unfin Back	1/2 PF 1S Map P
1	4	23 1/8	11/16	Top Stretcher	3/4 PF 2S Map Ply
1	4	23 1/8	11/16	Top Stretcher	3/4 PF 2S Map Ply
1	20	23 1/8	11/16	Deck	3/4 PF 2S Map Ply
1	4 1/2	16 13/16	11/16	Side Toe	3/4 Paint Grade Pl
1	4 1/2	24	11/16	Front Toe	3/4 Paint Grade Pl
1	4 1/2	16 13/16	11/16	Side Toe	3/4 Paint Grade Pl
1	3 3/8	6 3/4	1/4	FINGER PULL	1/4 MDF
2	3 3/8	6 3/4	1/4	FINGER PULL	1/4 MDF
1	3 3/8	6 3/4	1/4	FINGER PULL	1/4 MDF
2	21 1/2	17 1/4	1/4	Drawer Box Bottom	1/4 PF 1S Maple

Board Stock

Qty	Width	Length	Thick	Description	Material
2	8 1/4	18	5/8	Drawer Box Side	5/8 Drw Stock
1	8 1/4	21	5/8	Drawer Box Back	5/8 Drw Stock
1	8 1/4	21	5/8	Drawer Box Front	5/8 Drw Stock
1	8 1/4	18	5/8	Drawer Box Side	5/8 Drw Stock
1	8 1/4	18	5/8	Drawer Box Side	5/8 Drw Stock
1	8 1/4	21	5/8	Drawer Box Back	5/8 Drw Stock
1	8 1/4	21	5/8	Drawer Box Front	5/8 Drw Stock

Hinges

Qty	Material

Hinges Plates

Qty	Material

Guides

Qty	Material
2 P	Blum 563H4570C-18"

Drawer Boxes

Qty	Width	Height	Depth
1	24	10 3/16	
2	22 1/4	8 1/4	18

Roll Outs

Qty	Width	Height	Depth

Drawer Fronts

Qty	Width	Length	Thick
3	24	9 7/8	3/4

Doors

Qty	Width	Length	Thick

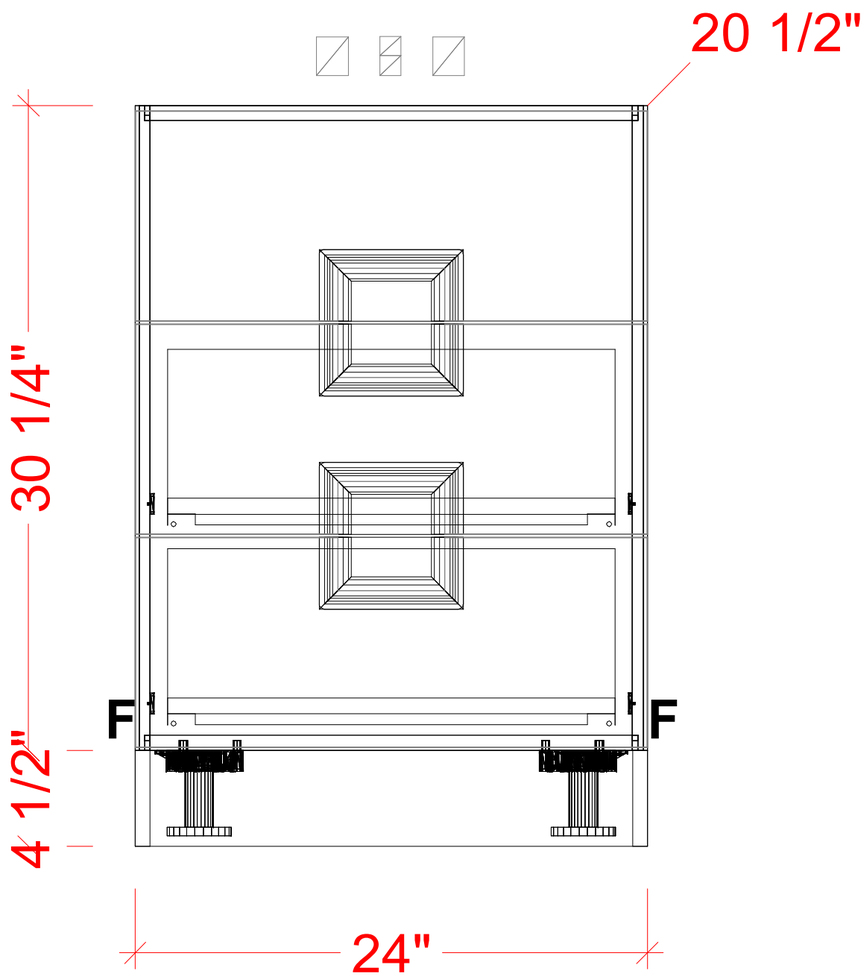

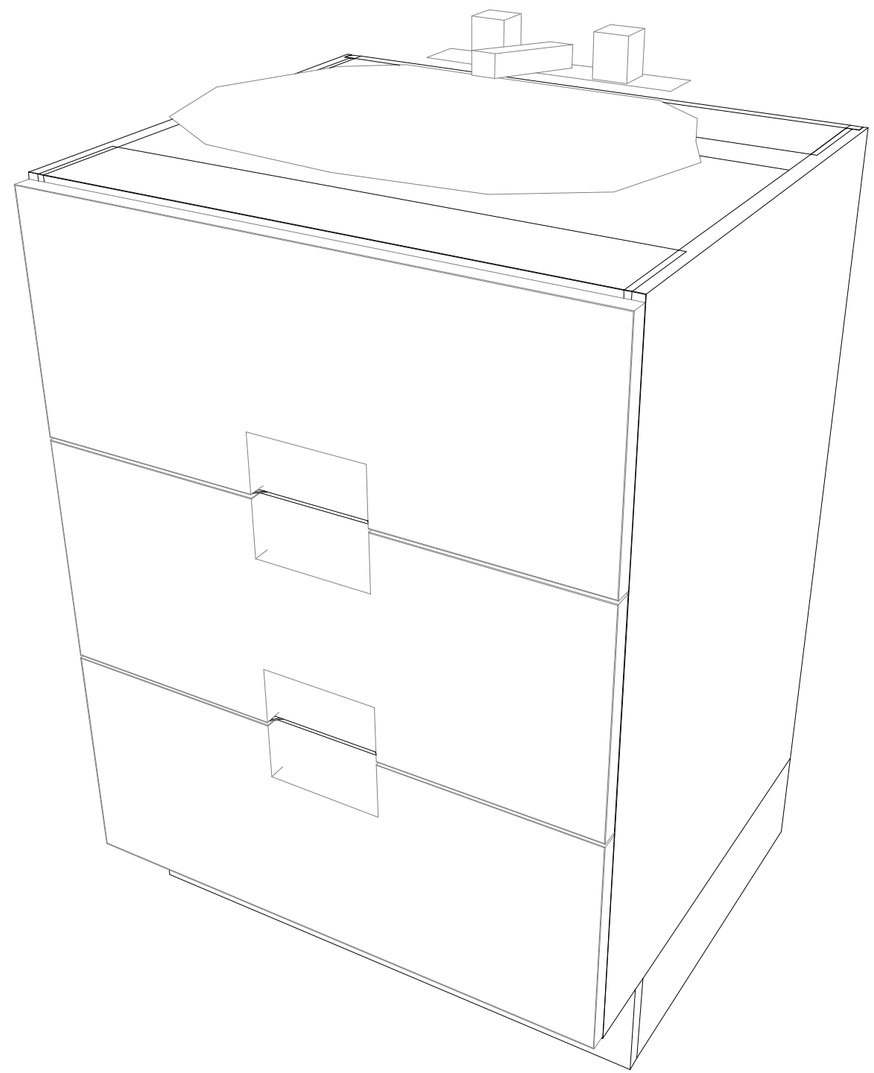

Left End = Finished

Right End = Finished

NOTE:

Job:NEAMONITIS Room #MUDROOM VANITY - Elev #2 Assembly #64 Ext.Color(HC-170 STONINGTON GRAY) Date: 03/09/22