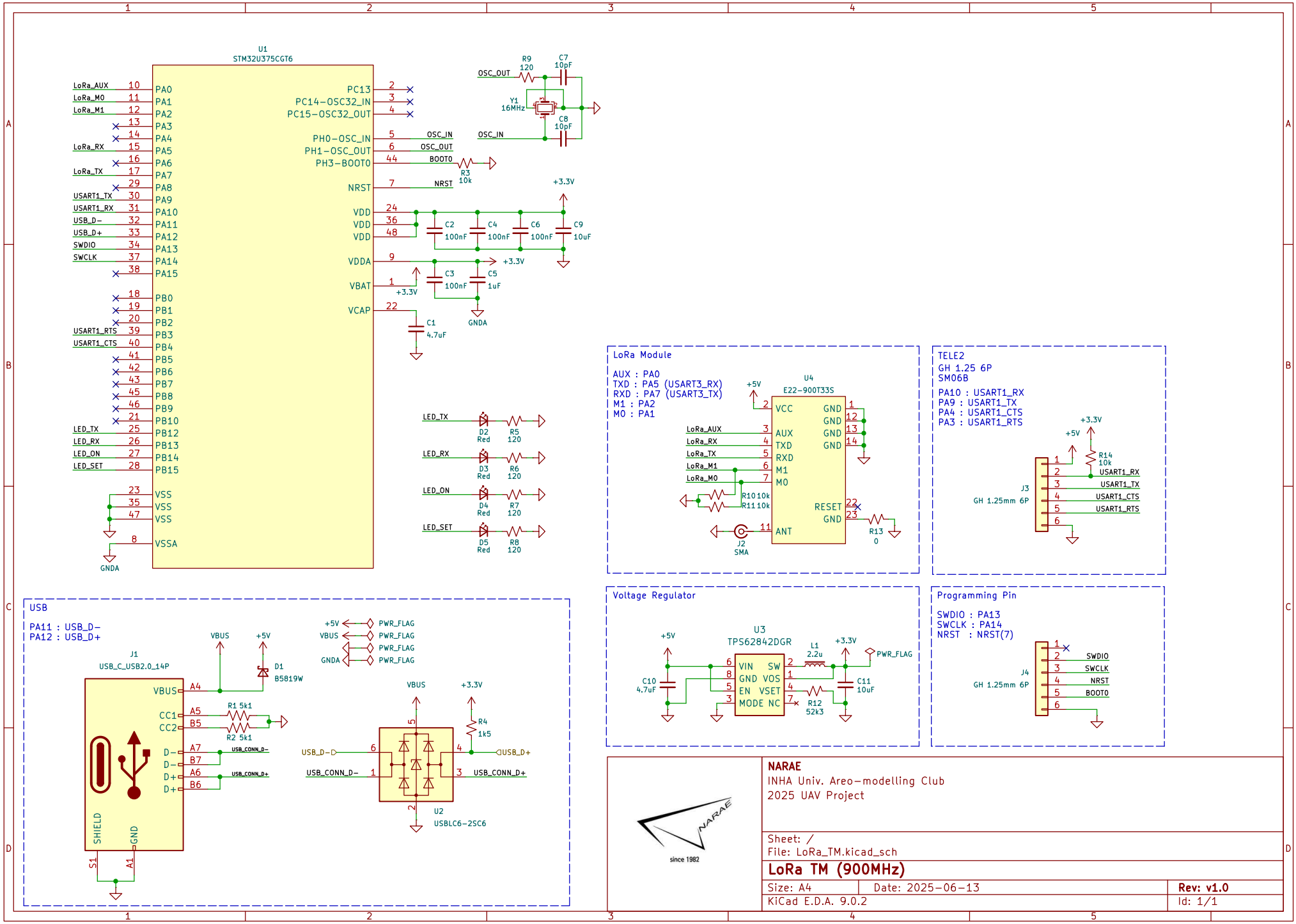
U1
STM32U375CGT6
LoRa_AUX
LoRa_M0
LoRa_M1
LoRa_RX
LoRa_TX
USART1_TX
USART1_RX
USB_D-
USB_D+
SWDIO
SWCLK
USART1_RTS
USART1_CTS
LED_TX
LED_RX
LED_ON
LED_SET
PA0
PA1
PA2
PA3
PA4
PA5
PA6
PA7
PA8
PA9
PA10
PA11
PA12
PA13
PA14
PA15
PB0
PB1
PB2
PB3
PB4
PB5
PB6
PB7
PB8
PB9
PB10
PB12
PB13
PB14
PB15
VSS
VSSA
PC13
PC14-OSC32_IN
PC15-OSC32_OUT
PH0-OSC_IN
PH1-OSC_OUT
PH3-BOOT0
NRST
VDD
VDDA
VBAT
VCAP
OSC_IN
OSC_OUT
BOOT0
R3 10k
R9 120
C7 10pF
C8 10pF
Y1 16MHz
+3.3V
C2 100nF
C4 100nF
C6 100nF
C9 10uF
C3 100nF
C5 1uF
C1 4.7uF
GNDA
D2 Red
D3 Red
D4 Red
D5 Red
R5 120
R6 120
R7 120
R8 120
LoRa Module
AUX : PA0
TXD : PA5 (USART3_RX)
RXD : PA7 (USART3_TX)
M1 : PA2
M0 : PA1
U4
E22-900T33S
+5V
VCC
AUX
TXD
RXD
M1
M0
RESET
ANT
GND
R10 10k
R11 10k
R13 0
J2 SMA
TELE2
GH 1.25 6P
SM06B
PA10 : USART1_RX
PA9 : USART1_TX
PA4 : USART1_CTS
PA3 : USART1_RTS
J3
GH 1.25mm 6P
R14 10k
USART1_RX
USART1_TX
USART1_CTS
USART1_RTS
USB
PA11 : USB_D-
PA12 : USB_D+
J1
USB_C_USB2.0_14P
VBUS
CC1
CC2
D-
D+
SHIELD
GND
S1
A1
D1 B5819W
R1 5k1
R2 5k1
USB_CONN_D-
USB_CONN_D+
PWR_FLAG
GNDA
U2
USBLC6-2SC6
R4 1k5
Voltage Regulator
U3
TPS62842DGR
VIN
GND
EN
MODE
SW
VOS
VSET
NC
C10 4.7uF
L1 2.2u
C11 10uF
R12 52k3
Programming Pin
SWDIO : PA13
SWCLK : PA14
NRST : NRST(7)
J4
GH 1.25mm 6P
SWDIO
SWCLK
NRST
BOOT0
NARAE
since 1982
NARAE
INHA Univ. Areo-modelling Club
2025 UAV Project
Sheet: /
File: LoRa_TM.kicad_sch
LoRa TM (900MHz)
Size: A4
Date: 2025-06-13
Rev: v1.0
KiCad E.D.A. 9.0.2
Id: 1/1