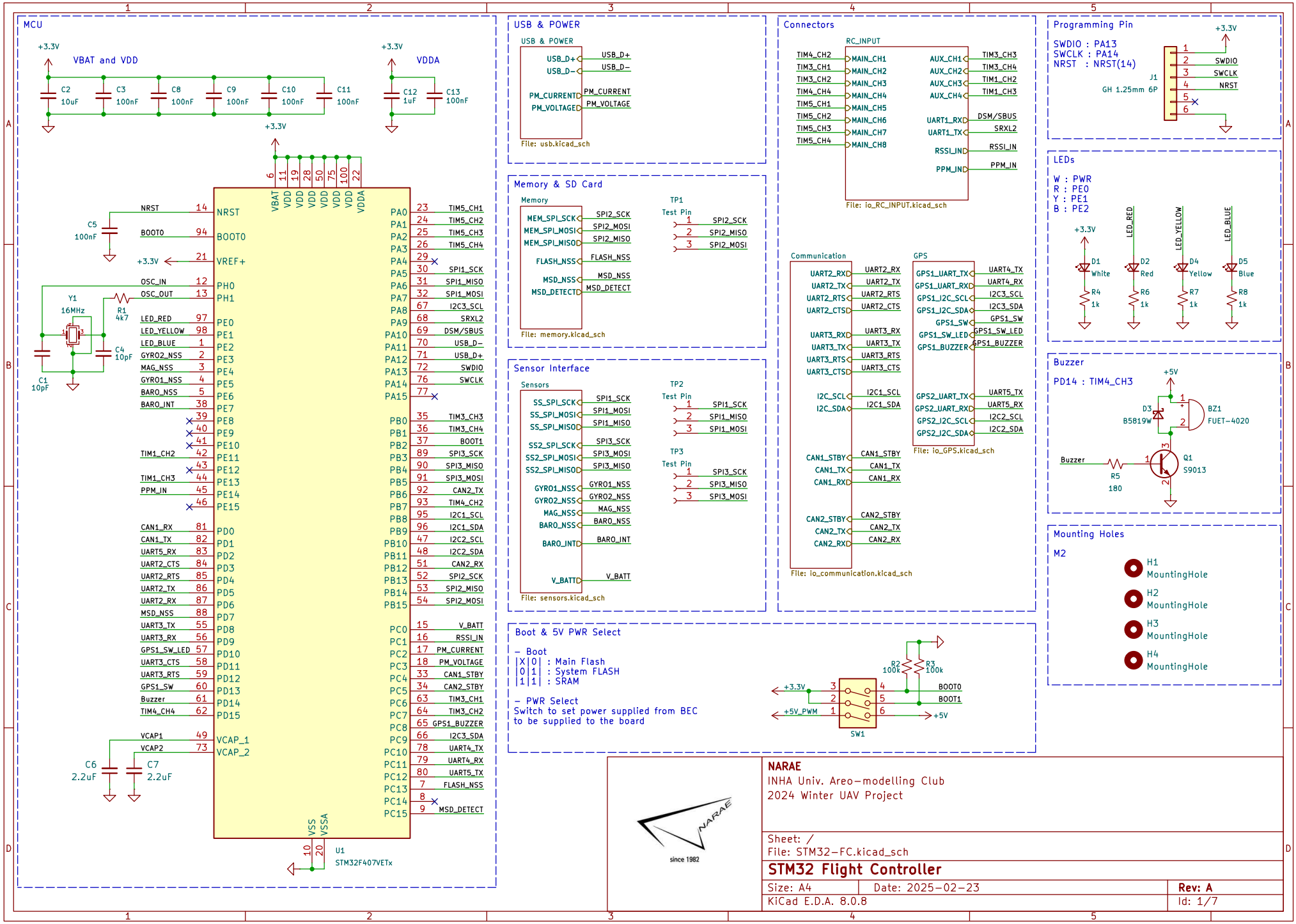
MCU
VBAT and VDD
VDDA
+3.3V
C2 10uF
C3 100nF
C8 100nF
C9 100nF
C10 100nF
C11 100nF
C12 1uF
C13 100nF
C5 100nF
Y1 16MHz
R1 4k7
C4 10pF
C1 10pF
C6 2.2uF
C7 2.2uF
U1
STM32F407VETx
USB & POWER
File: usb.kicad_sch
Memory & SD Card
File: memory.kicad_sch
TP1
Test Pin
Sensor Interface
File: sensors.kicad_sch
TP2
TP3
Connectors
RC_INPUT
File: io_RC_INPUT.kicad_sch
Communication
File: io_communication.kicad_sch
GPS
File: io_GPS.kicad_sch
Programming Pin
SWDIO : PA13
SWCLK : PA14
NRST : NRST(14)
J1
GH 1.25mm 6P
LEDs
W : PWR
R : PE0
Y : PE1
B : PE2
D1 White
D2 Red
D4 Yellow
D5 Blue
R4 1k
R6 1k
R7 1k
R8 1k
Buzzer
PD14 : TIM4_CH3
D3 B5819W
BZ1 FUET-4020
Q1 S9013
R5 180
Mounting Holes
M2
H1 MountingHole
H2 MountingHole
H3 MountingHole
H4 MountingHole
Boot & 5V PWR Select
– Boot
|X|0| : Main Flash
|0|1| : System FLASH
|1|1| : SRAM
– PWR Select
Switch to set power supplied from BEC
to be supplied to the board
R2 100k
R3 100k
SW1
NARAE
since 1982
NARAE
INHA Univ. Areo-modelling Club
2024 Winter UAV Project
Sheet: /
File: STM32-FC.kicad_sch
STM32 Flight Controller
Size: A4
Date: 2025-02-23
Rev: A
KiCad E.D.A. 8.0.8
Id: 1/7

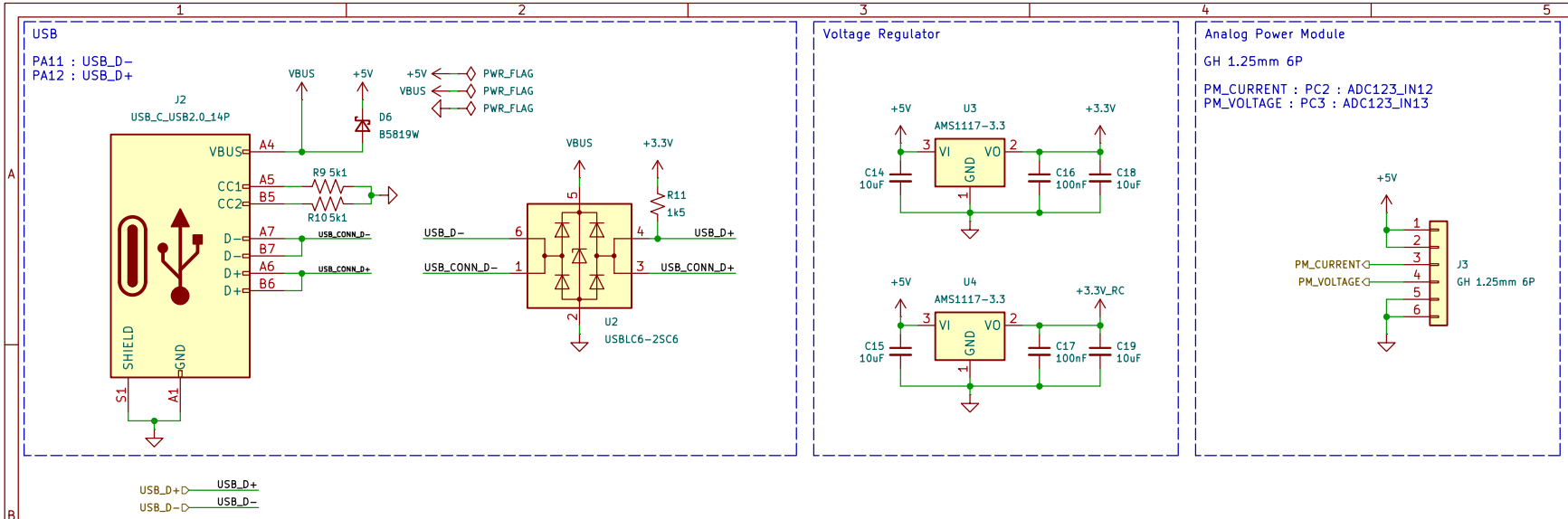

NARAE
INHA Univ. Areo−modelling Club
2024 Winter UAV Project

since 1982

Sheet: /USB & POWER/
File: usb.kicad_sch

USB & POWER

Size: A4	Date: 2025−02−23	**Rev: A**
KiCad E.D.A. 8.0.8		Id: 2/7

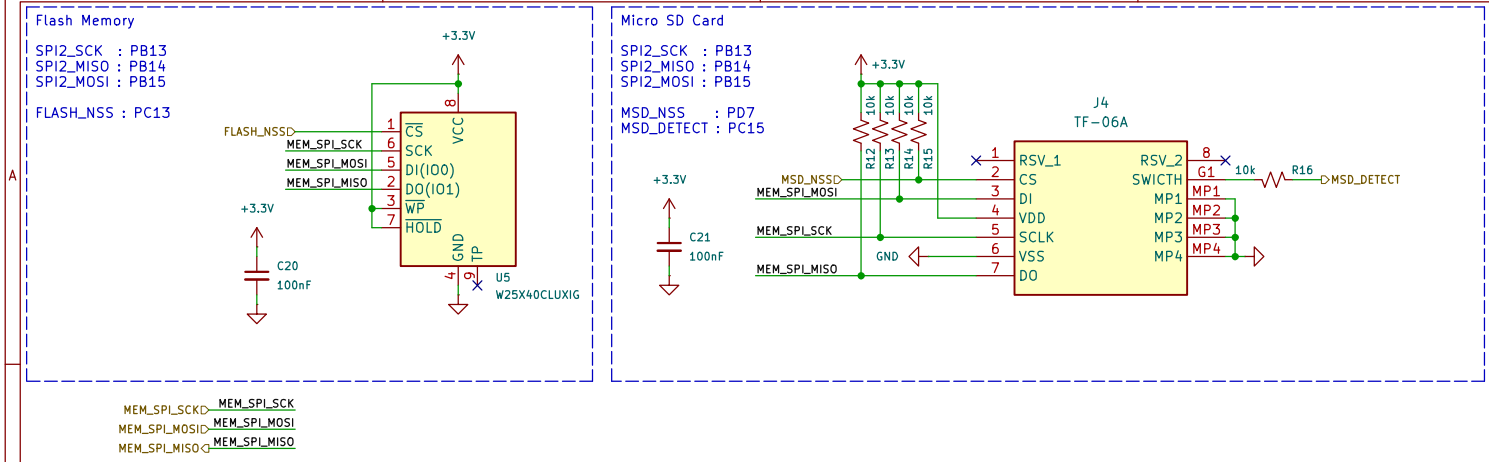

NARAE
INHA Univ. Areo-modelling Club
2024 Winter UAV Project

Sheet: /Memory/
File: memory.kicad_sch

Memory

Size: A4	Date: 2025-02-23	**Rev: A**
KiCad E.D.A. 8.0.8		Id: 3/7

Accelerometer/Gyroscope1

SPI1_SCK : PA5
SPI1_MISO : PA6
SPI1_MOSI : PA7

GYRO1_NSS : PE5

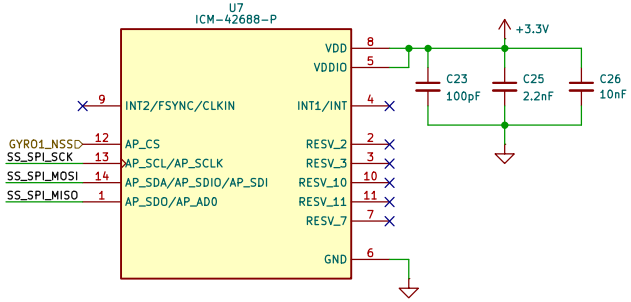

Magnetic Sensor

SPI3_SCK : PB3
SPI3_MISO : PB4
SPI3_MOSI : PB5

MAG_NSS : PE4

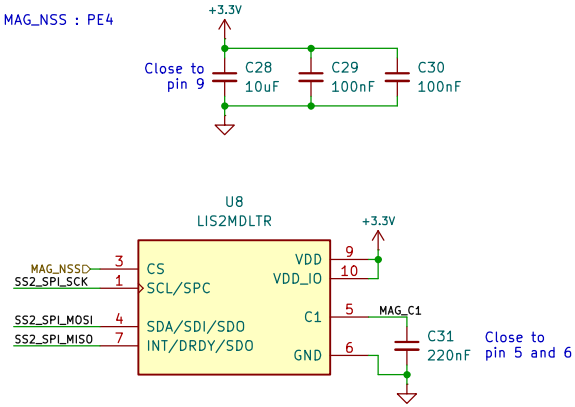

Battery Monitoring

JST ZH 1.5mm 2P

V_BATT : PC0 : ADC123_IN10

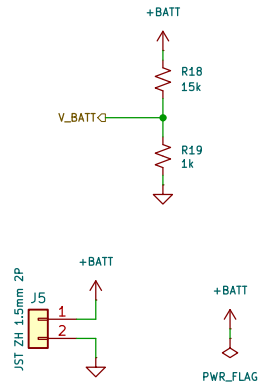

Accelerometer/Gyroscope2

SPI3_SCK : PB3
SPI3_MISO : PB4
SPI3_MOSI : PB5

GYRO2_NSS : PE3

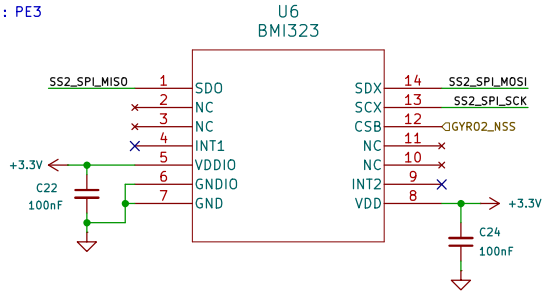

Barometeric Pressure Sensor

SPI1_SCK : PA5
SPI1_MISO : PA6
SPI1_MOSI : PA7

BARO_NSS : PE6
BARO_INT : PE7

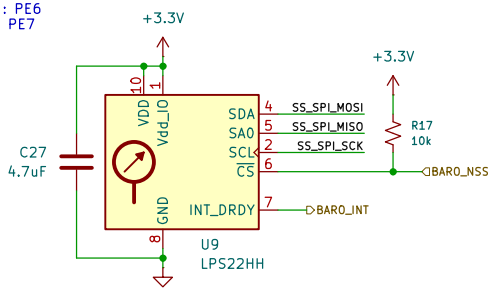

SS_SPI_SCK ◁ SS_SPI_SCK
SS_SPI_MOSI ◁ SS_SPI_MOSI
SS_SPI_MISO ◁ SS_SPI_MISO

SS2_SPI_SCK ◁ SS2_SPI_SCK
SS2_SPI_MOSI ◁ SS2_SPI_MOSI
SS2_SPI_MISO ◁ SS2_SPI_MISO

NARAE
INHA Univ. Areo-modelling Club
2024 Winter UAV Project

Sheet: /Sensors/
File: sensors.kicad_sch

Sensors

Size: A4	Date: 2025-02-23	**Rev: A**
KiCad E.D.A. 8.0.8		Id: 4/7

PWM RC OUT

MAIN 1 : PA0 : TIM5_CH1
MAIN 2 : PA1 : TIM5_CH2
MAIN 3 : PA2 : TIM5_CH3
MAIN 4 : PA3 : TIM5_CH4
MAIN 5 : PC6 : TIM3_CH1
MAIN 6 : PC7 : TIM3_CH2
MAIN 7 : PB0 : TIM3_CH3
MAIN 8 : PB1 : TIM3_CH4

AUX1 : PB7 : TIM4_CH1
AUX2 : PE11 : TIM1_CH2
AUX3 : PE13 : TIM1_CH3
AUX4 : PE14 : TIM1_CH4

RCIN : PPM/SBUS/SRXL2
RSSI_IN : PC1 : ADC123_IN11

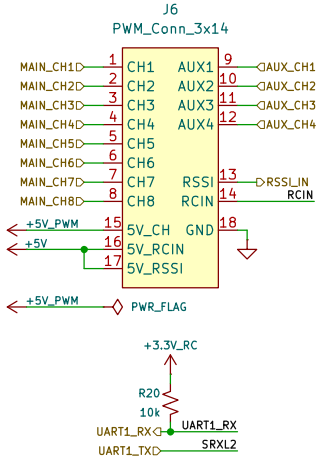

RCIN (SBUS/PPM/SRXL2)

2.54mm 3P

SBUS : PA10 : USART1_RX
PPM_IN : PD15 : TIM4_CH4
SRXL2 : PA9 : USART1_TX

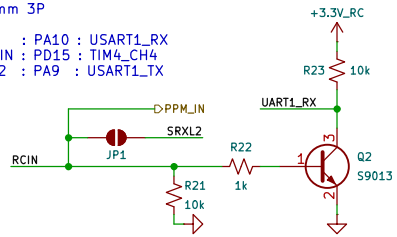

DSM

ZH 1.5mm 3P

PA10 : USART1_RX

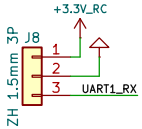

SRXL2

ZH 1.5mm 4P

PA9 : USART1_TX (Half Duplex)

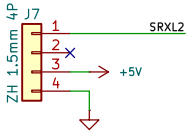

NARAE
INHA Univ. Areo-modelling Club
2024 Winter UAV Project

Sheet: /RC_INPUT/
File: io_RC_INPUT.kicad_sch

RC_INPUT

Size: A4	Date: 2025-02-23	**Rev: A**
KiCad E.D.A. 8.0.8		Id: 5/7

GPS1

GH 1.25mm 10P

GPS1_TX : PC10 : UART4_TX
GPS1_RX : PC11 : UART4_RX
GPS1_SCL : PA8 : I2C3_SCL
GPS1_SDA : PC9 : I2C3_SDA
GPS1_SW : PD13
GPS1_SW_LED : PD10
GPS1_BUZZER : PC8 : TIM8_CH3

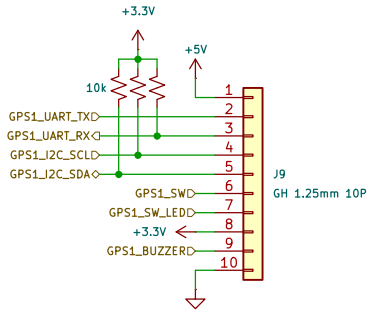

GPS2

GH 1.25mm 6P

GPS2_TX : PC12 : UART5_TX
GPS2_RX : PD2 : UART5_RX
GPS2_SCL : PB10 : I2C2_SCL
GPS2_SDA : PB11 : I2C2_SDA

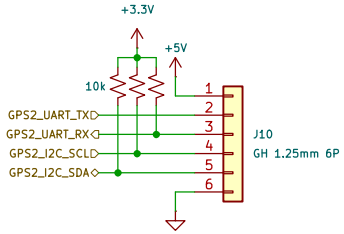

NARAE
INHA Univ. Areo-modelling Club
2024 Winter UAV Project

Sheet: /GPS/
File: io_GPS.kicad_sch

GPS

Size: A4	Date: 2025-02-23	**Rev: A**
KiCad E.D.A. 8.0.8		Id: 6/7

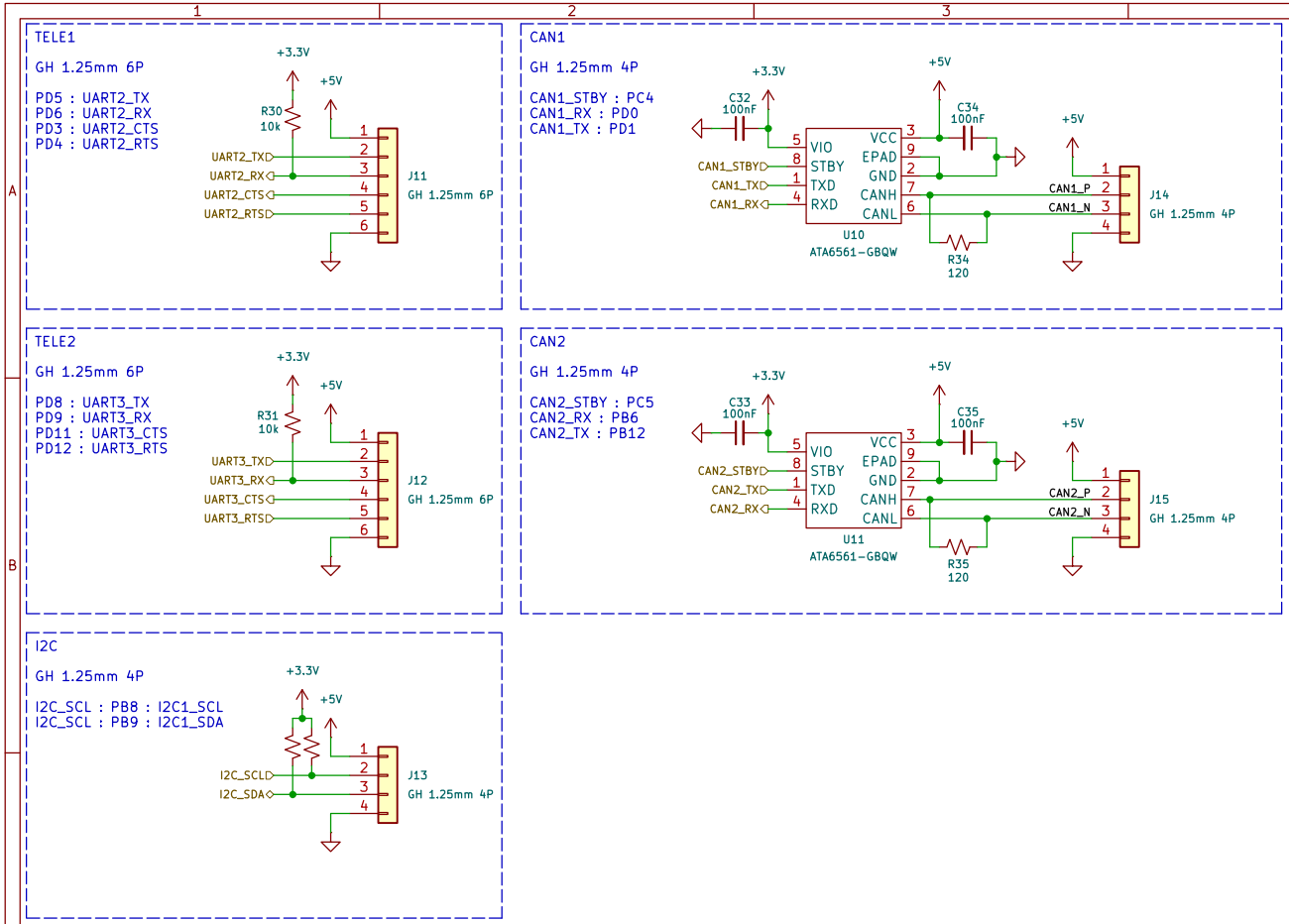

NARAE
INHA Univ. Areo-modelling Club
2024 Winter UAV Project

Sheet: /Communication/
File: io_communication.kicad_sch

Communication

Size: A4	Date: 2025-02-23	**Rev: A**
KiCad E.D.A. 8.0.8		Id: 7/7