/

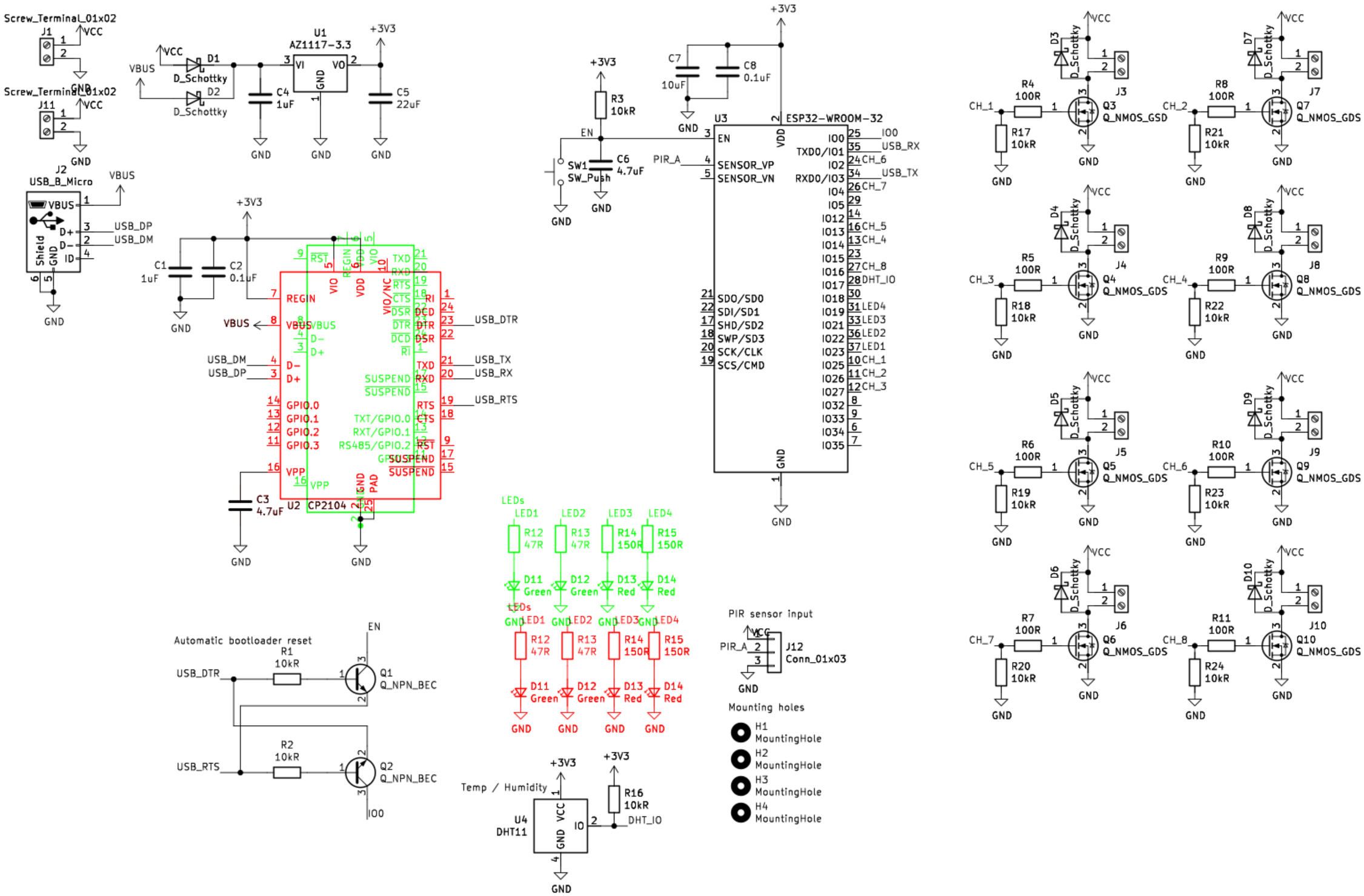
Screw_Terminal_01x02
J1
VCC
GND
Screw_Terminal_01x02
J11
VCC
GND
J2
USB_B_Micro
VBUS
USB_DP
USB_DM
Shield
GND
D1
D_Schottky
D2
D_Schottky
U1
AZ1117-3.3
VI
VO
GND
C4
1uF
C5
22uF
+3V3
C1
1uF
C2
0.1uF
REGIN
VBUS
D-
D+
RST
VIO
VDD
VIO/NC
TXD
RXD
RTS
CTS
DSR
DTR
DCD
RI
SUSPEND
GPIO.0
GPIO.1
GPIO.2
GPIO.3
TXT/GPIO.0
RXT/GPIO.1
RS485/GPIO.2
VPP
GND
PAD
U2
CP2104
C3
4.7uF
USB_DTR
USB_TX
USB_RX
USB_RTS
C7
10uF
C8
0.1uF
R3
10kR
EN
SW1
SW_Push
C6
4.7uF
PIR_A
U3
ESP32-WROOM-32
SENSOR_VP
SENSOR_VN
SDO/SD0
SDI/SD1
SHD/SD2
SWP/SD3
SCK/CLK
SCS/CMD
IO0
TXD0/IO1
IO2
RXD0/IO3
IO4
IO5
IO12
IO13
IO14
IO15
IO16
IO17
IO18
IO19
IO21
IO22
IO23
IO25
IO26
IO27
IO32
IO33
IO34
IO35
CH_6
CH_7
CH_5
CH_4
CH_8
DHT_IO
LED4
LED3
LED2
LED1
CH_1
CH_2
CH_3
D3
D_Schottky
R4
100R
R17
10kR
J3
Q3
Q_NMOS_GSD
D7
D_Schottky
R8
100R
R21
10kR
J7
Q7
Q_NMOS_GDS
D4
D_Schottky
R5
100R
R18
10kR
J4
Q4
Q_NMOS_GDS
D8
D_Schottky
R9
100R
R22
10kR
J8
Q8
Q_NMOS_GDS
D5
D_Schottky
R6
100R
R19
10kR
J5
Q5
Q_NMOS_GDS
D9
D_Schottky
R10
100R
R23
10kR
J9
Q9
Q_NMOS_GDS
D6
D_Schottky
R7
100R
R20
10kR
J6
Q6
Q_NMOS_GDS
D10
D_Schottky
R11
100R
R24
10kR
J10
Q10
Q_NMOS_GDS
Automatic bootloader reset
R1
10kR
Q1
Q_NPN_BEC
R2
10kR
Q2
Q_NPN_BEC
LEDs
LED1
LED2
LED3
LED4
R12
47R
R13
47R
R14
150R
R15
150R
D11
Green
D12
Green
D13
Red
D14
Red
Temp / Humidity
U4
DHT11
R16
10kR
PIR sensor input
J12
Conn_01x03
Mounting holes
H1
MountingHole
H2
MountingHole
H3
MountingHole
H4
MountingHole