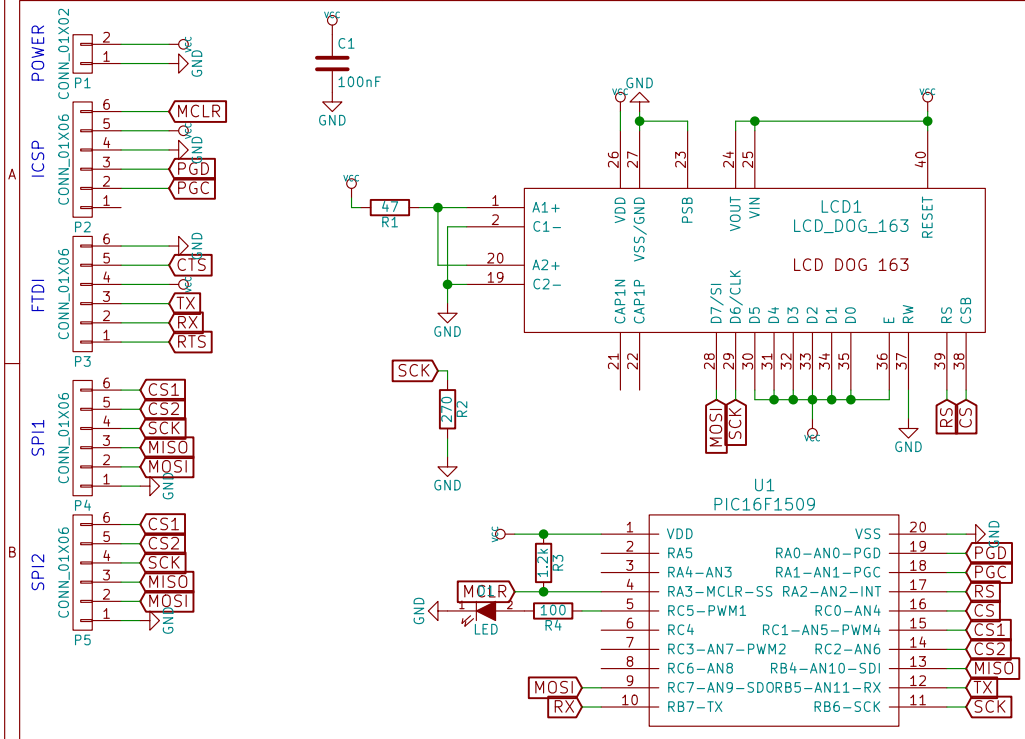

Sheet: /
File: RS232_LCD.sch

Title:

Size: A4	Date: 25 nov 2015	**Rev:**
KiCad E.D.A. kicad 4.0.2+dfsg1-stable		Id: 1/1