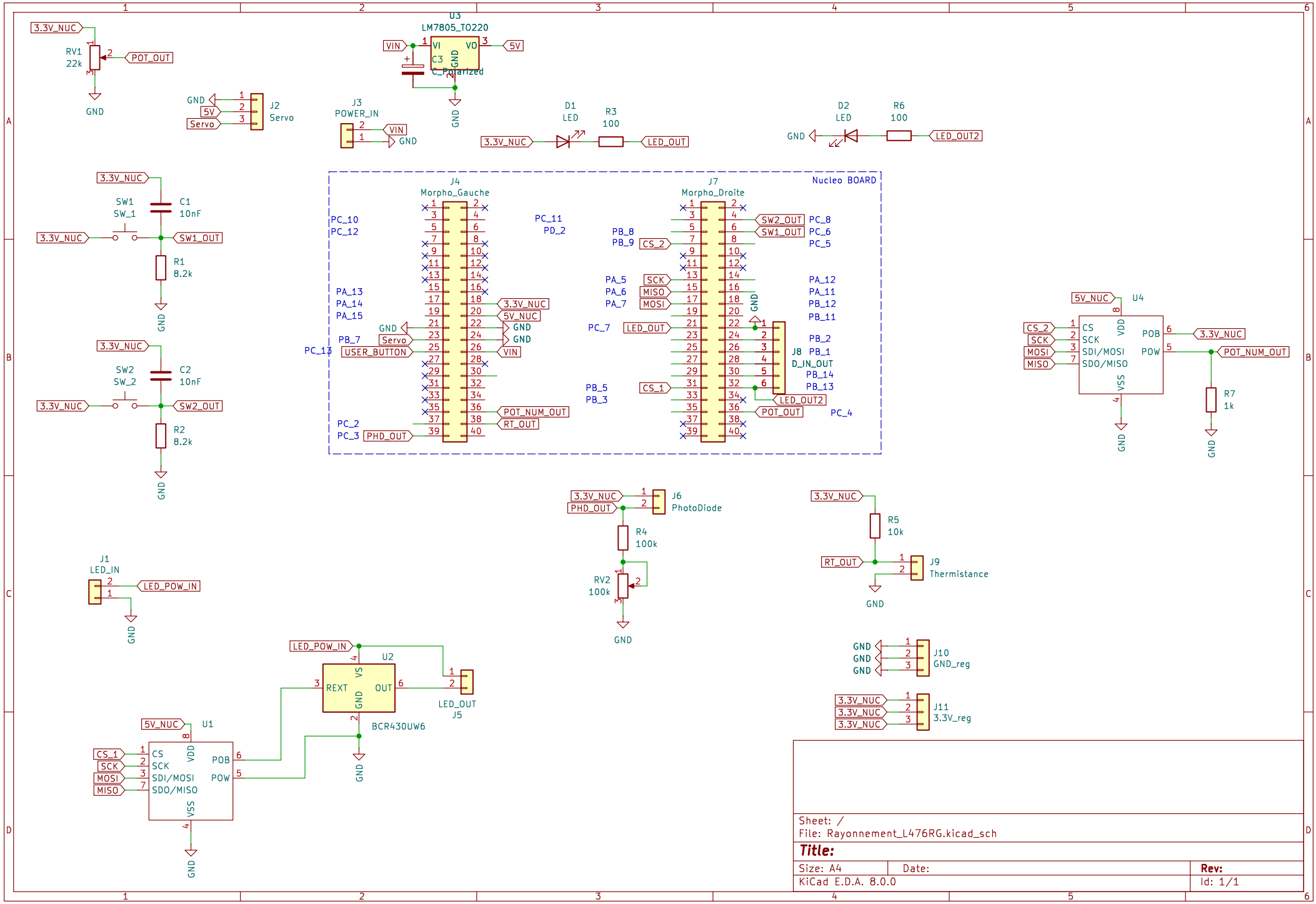
U3
LM7805_TO220
VI
VO
GND
C3
C_Polarized
VIN
5V
RV1
22k
POT_OUT
GND
J2
Servo
J3
POWER_IN
D1
LED
R3
100
LED_OUT
D2
LED
R6
100
LED_OUT2
SW1
SW_1
C1
10nF
SW1_OUT
R1
8.2k
SW2
SW_2
C2
10nF
SW2_OUT
R2
8.2k
J4
Morpho_Gauche
J7
Morpho_Droite
Nucleo BOARD
PC_10
PC_12
PC_11
PD_2
PA_13
PA_14
PA_15
PB_7
PC_13
USER_BUTTON
PC_2
PC_3
PHD_OUT
3.3V_NUC
5V_NUC
POT_NUM_OUT
RT_OUT
PB_8
PB_9
CS_2
PA_5
PA_6
PA_7
SCK
MISO
MOSI
PC_7
LED_OUT
PB_5
PB_3
CS_1
PC_8
PC_6
PC_5
PA_12
PA_11
PB_12
PB_11
PB_2
PB_1
PB_14
PB_13
PC_4
J8
D_IN_OUT
U4
CS
SCK
SDI/MOSI
SDO/MISO
VDD
VSS
POB
POW
R7
1k
J6
PhotoDiode
R4
100k
RV2
100k
R5
10k
J9
Thermistance
J1
LED_IN
LED_POW_IN
U2
REXT
OUT
BCR430UW6
LED_OUT
J5
U1
J10
GND_reg
J11
3.3V_reg
Sheet: /
File: Rayonnement_L476RG.kicad_sch
Title:
Size: A4
Date:
Rev:
KiCad E.D.A. 8.0.0
Id: 1/1