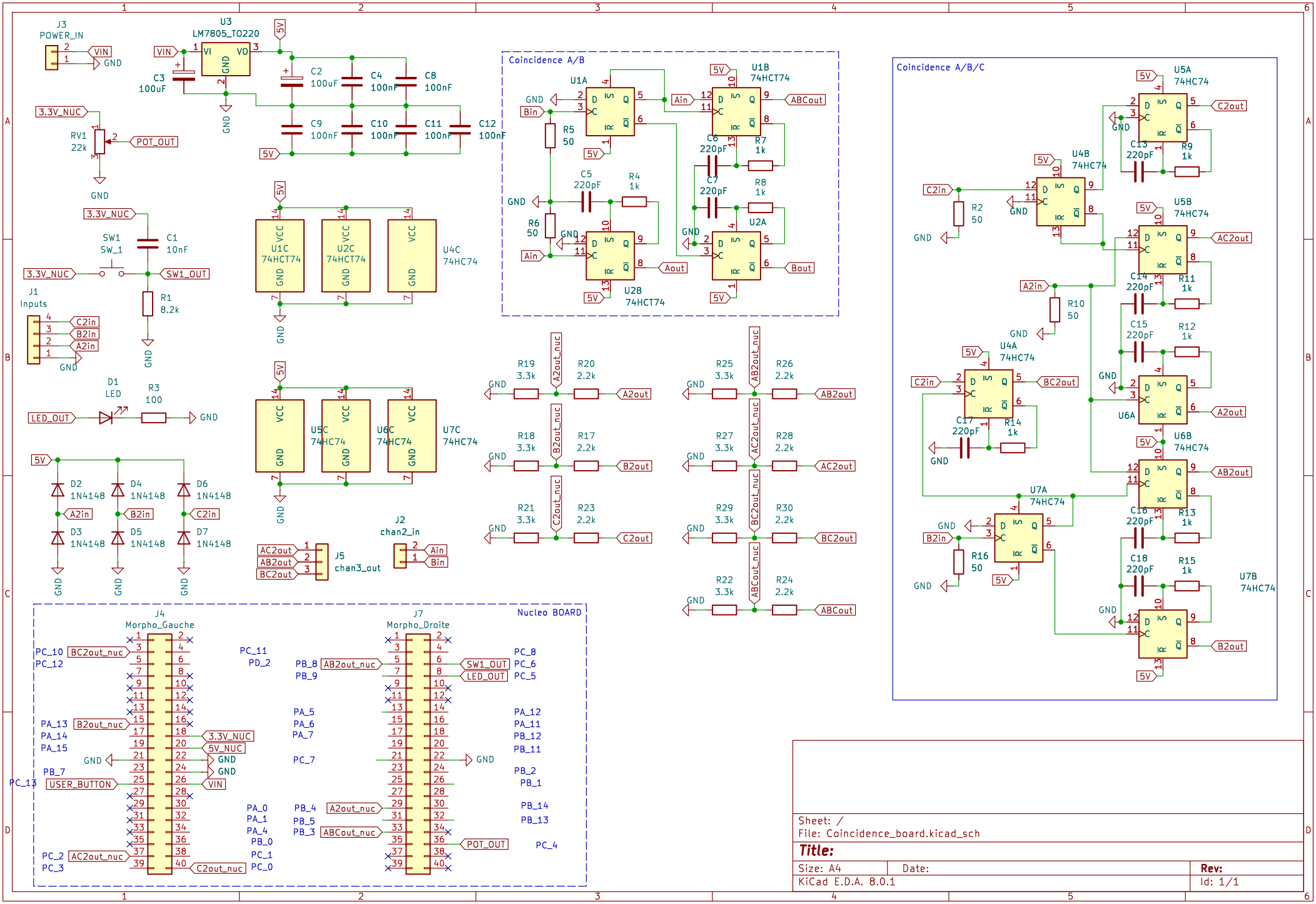
J3
POWER_IN
VIN
GND
U3
LM7805_TO220
VI
VO
GND
C3
100uF
C2
100uF
C4
100nF
C8
100nF
C9
100nF
C10
100nF
C11
100nF
C12
100nF
5V
3.3V_NUC
RV1
22k
POT_OUT
SW1
SW_1
C1
10nF
SW1_OUT
R1
8.2k
J1
Inputs
C2in
B2in
A2in
D1
LED
R3
100
LED_OUT
D2
1N4148
D3
1N4148
D4
1N4148
D5
1N4148
D6
1N4148
D7
1N4148
U1C
74HCT74
U2C
74HCT74
U4C
74HC74
U5C
74HC74
U6C
74HC74
U7C
74HC74
J5
chan3_out
AC2out
AB2out
BC2out
J2
chan2_in
Ain
Bin
Coincidence A/B
U1A
U1B
74HCT74
U2A
U2B
74HCT74
R5
50
R6
50
C5
220pF
C6
220pF
C7
220pF
R4
1k
R7
1k
R8
1k
Aout
Bout
ABCout
R19
3.3k
R20
2.2k
R18
3.3k
R17
2.2k
R21
3.3k
R23
2.2k
A2out_nuc
B2out_nuc
C2out_nuc
A2out
B2out
C2out
R25
3.3k
R26
2.2k
R27
3.3k
R28
2.2k
R29
3.3k
R30
2.2k
R22
3.3k
R24
2.2k
AB2out_nuc
AC2out_nuc
BC2out_nuc
ABCout_nuc
AB2out
AC2out
BC2out
ABCout
Coincidence A/B/C
U5A
74HC74
U4B
74HC74
U5B
74HC74
U4A
74HC74
U6A
U6B
74HC74
U7A
74HC74
U7B
74HC74
C2in
R2
50
A2in
R10
50
C13
220pF
R9
1k
C14
220pF
R11
1k
C15
220pF
R12
1k
C17
220pF
R14
1k
C16
220pF
R13
1k
C18
220pF
R15
1k
B2in
R16
50
J4
Morpho_Gauche
J7
Morpho_Droite
Nucleo BOARD
PC_10
PC_12
PC_11
PD_2
PB_8
PB_9
PC_8
PC_6
PC_5
PA_13
PA_14
PA_15
PA_5
PA_6
PA_7
PA_12
PA_11
PB_12
PB_11
PB_7
PC_13
PC_7
PB_2
PB_1
PA_0
PA_1
PA_4
PB_0
PC_1
PC_0
PB_4
PB_5
PB_3
PB_14
PB_13
PC_4
PC_2
PC_3
3.3V_NUC
5V_NUC
USER_BUTTON
Sheet: /
File: Coincidence_board.kicad_sch
Title:
Size: A4
Date:
Rev:
KiCad E.D.A. 8.0.1
Id: 1/1