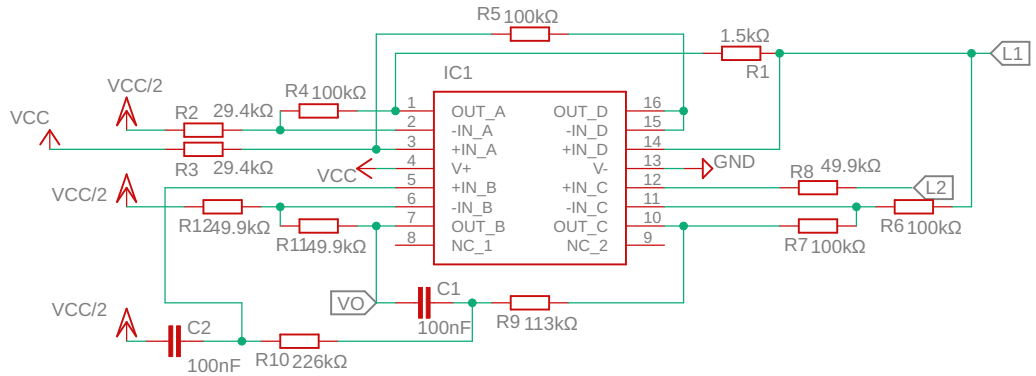

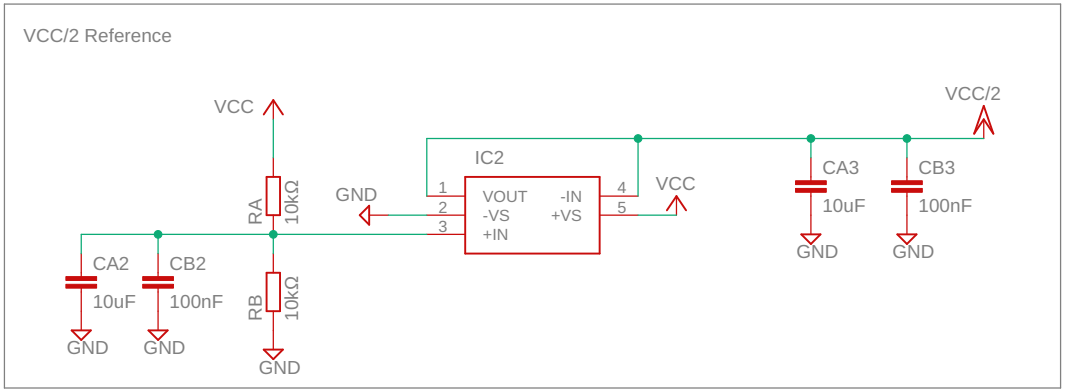

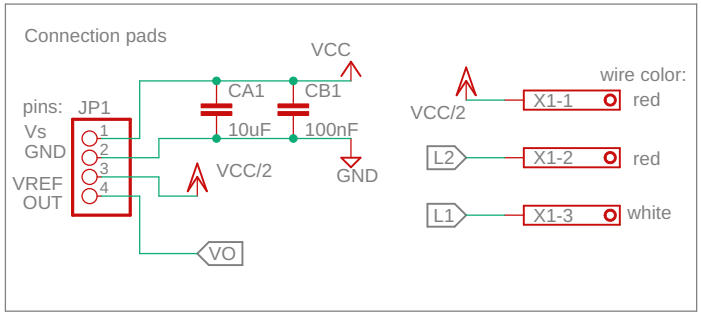

RTD signal conditioning

Resistance measuring using 0.5mA

Vo = G·I·R = 2·0.5mA·R

RTD_circuit

14-Jul-21 23:00

Sheet: 1/1

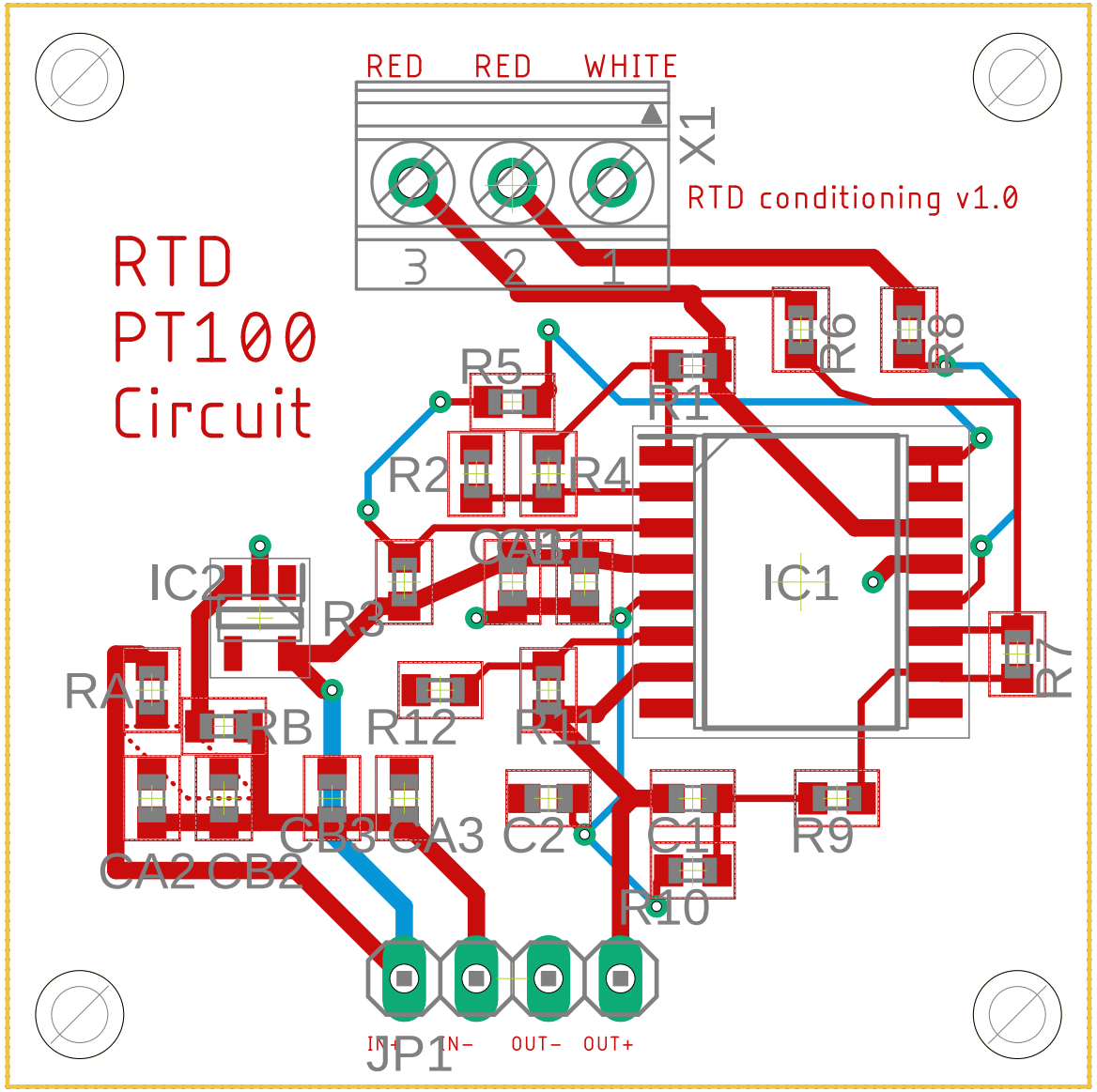
RED
RED
WHITE
X1
RTD conditioning v1.0
3
2
1
RTD
PT100
Circuit
R5
R1
R6
R8
R2
R4
CA1
IC2
R3
IC1
R7
RA
RB
R12
R11
CB3
CA3
C2
C1
R9
CA2
CB2
R10
IN+
IN-
OUT-
OUT+
JP1