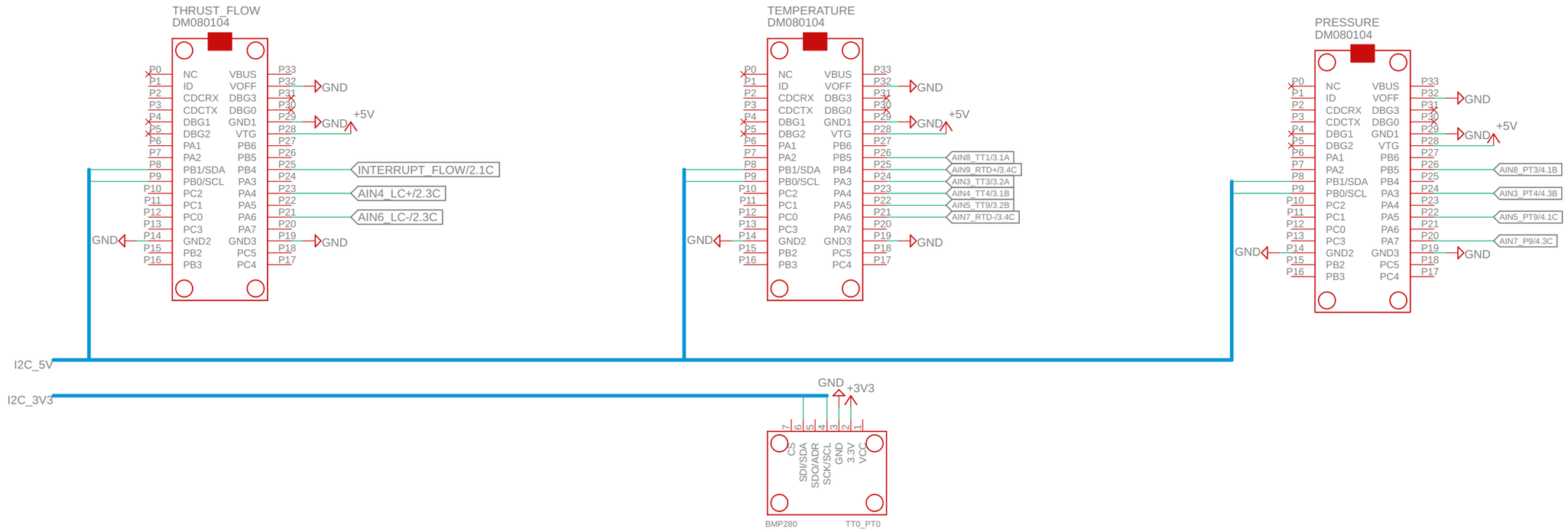

Microchips Schematics

general

13-Jul-21 19:35

Sheet: 1/4