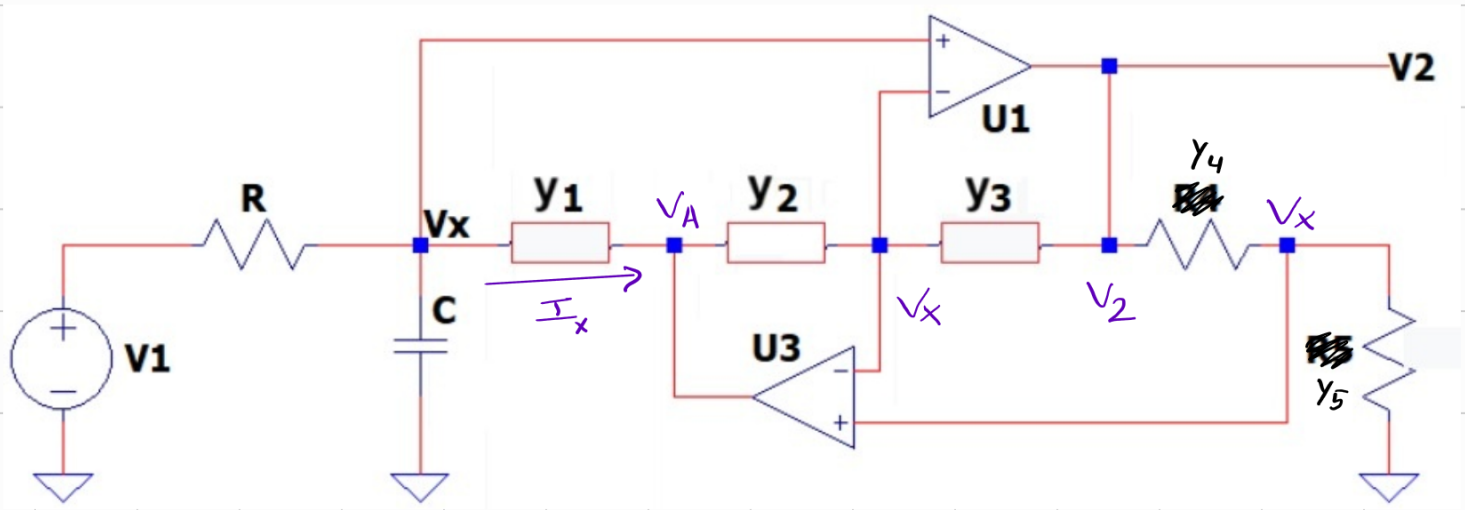

$$Z_{IN} = \frac{V_x}{I_x} \quad / \quad I_x = (V_x - V_A)\,Y_1$$

$$Z_{IN} = \frac{V_x}{Y_1\,(V_x - V_A)} \quad / \quad (V_A - V_x)\,Y_2 = (V_x - V_2)\,Y_3 \longrightarrow V_A = \frac{Y_2 + Y_3}{Y_2} V_x - \frac{Y_3}{Y_2} V_2 \;//$$

$$Z_{IN} = \frac{V_x}{Y_1\left(1 - \frac{Y_2+Y_3}{Y_2}\right) V_x + \frac{Y_1 Y_3}{Y_2} V_2} \quad / \quad (V_2 - V_x)\,Y_4 = V_x Y_5 \longrightarrow V_2 = \frac{Y_4 + Y_5}{Y_4} V_x \;//$$

$$Z_{IN} = \frac{V_x}{V_x\left(-\frac{Y_1 Y_3}{Y_2} + \frac{Y_1 Y_3}{Y_2} \cdot \frac{Y_4+Y_5}{Y_4}\right)} = \frac{Y_2}{Y_1 Y_3\left(-1 + \frac{Y_4+Y_5}{Y_4}\right)} = \frac{Y_2\,Y_4}{Y_1\,Y_3\,Y_5}$$

$$\boxed{Z_{IN} = \frac{Z_4 Z_3 Z_5}{Z_1 Z_4}} \longrightarrow R_1 = 10K\Omega,\ C_2 = 470\ nF,\ R_3 = 4{,}7K\Omega,\ R_4 = 1K\Omega,\ R_5 = 1K\Omega$$

$$\begin{cases} V_x Y_5 = (V_2 - V_x)\,Y_4 \longrightarrow V_x = V_2 \dfrac{Y_4}{Y_4 + Y_5} \;// \\ (V_A - V_x)\,Y_2 = (V_x - V_2)\,Y_3 \longrightarrow V_A = \dfrac{1}{Y_2}\left[(Y_2 + Y_3)\dfrac{Y_4}{Y_4+Y_5} - Y_3\right] V_2 \\ (V_1 - V_x)\dfrac{1}{R} = V_x(sC) + (V_x - V_A)\,Y_1 \end{cases}$$

$$\hookrightarrow V_A = \frac{Y_4}{Y_4+Y_5}\left(1 - \frac{Y_3 Y_5}{Y_2 Y_4}\right) \;//$$

$$\hookrightarrow V_x\left(sC + \frac{1}{R} + Y_1\right) - V_A Y_1 = V_1 \cdot \frac{1}{R}$$

$$V_2\left[\frac{Y_4}{Y_4+Y_5}\left(sC + \frac{1}{R} + Y_1\right) - \frac{Y_4}{Y_4+Y_5} Y_1\left(1 - \frac{Y_3 Y_5}{Y_2 Y_4}\right)\right] = V_1 \cdot \frac{1}{R}$$

$$V_2\left(sC + \frac{1}{R} + \cancel{Y_1} - \cancel{Y_1} + \frac{Y_1 Y_3 Y_5}{Y_2 Y_4}\right) = V_1\left(1 + \frac{Y_5}{Y_4}\right)\frac{1}{R} \quad / \quad Y_{IN} = \frac{Y_1 Y_3 Y_5}{Y_2 Y_4} = \frac{1}{sL}$$

$$\boxed{\frac{V_2}{V_1} = \left(1 + \frac{R_4}{R_5}\right)\frac{\frac{1}{RC}s}{s^2 + s\frac{1}{RC} + \frac{1}{LC}} \quad / \quad L = \frac{C_2 R_1 R_3 R_5}{R_4}}$$

$$\begin{cases} \omega_0 = 2\pi f_0 = \dfrac{1}{\sqrt{LC}} \longrightarrow L = \dfrac{1}{C(2\pi f_0)^2} \\ \dfrac{\omega_0}{Q} = \dfrac{1}{RC} \longrightarrow R = \dfrac{Q}{2\pi f_0 \cdot C} \end{cases}$$

Usando un capacitor de $C = 4{,}7\,nF$:

$R = 67{,}7\,K\Omega$

$L = 53{,}9\,mHy$

$\rightarrow$ Para $R_4 = R_5 \Longrightarrow \dfrac{V_2}{V_1} = \dfrac{6{,}29\,K\frac{rad}{s}\,s}{s^2 + 3{,}14\,k\frac{rad}{s}\,s + 4G\frac{rad^2}{s^2}}$

$\rightarrow$ $m_{\omega_0} = \omega_0 \wedge m_Z = R$

$$\begin{cases} R' = \dfrac{R}{m_Z} \\ C' = C \cdot m_Z \cdot m_\omega \\ L' = \dfrac{m_\omega}{m_Z} L \end{cases}$$

$$\Longrightarrow T_{\omega,Z}(\$) = \left(1 + \frac{R_4}{R_5}\right) \frac{\$ \cdot \frac{\cancel{m_Z}}{m_\omega \cancel{m_Z} R' C'}}{\$^2 + \$ \underbrace{\frac{\cancel{\omega_0^2}}{R' \cdot \sqrt{\frac{C'}{L'}}} \cdot \frac{1}{\cancel{\omega_0^2}}} + \frac{m_Z}{m_\omega m_Z C' \cdot m_\omega L'}}$$

$$\hookrightarrow \frac{\omega_0}{Q} = \frac{1}{RC} = \frac{\frac{1}{\sqrt{LC}}}{R\sqrt{\frac{C}{L}}} = \frac{\omega_0}{R}\sqrt{\frac{L}{C}}$$

$$\boxed{T_{(\omega,Z)}(\$) = \left(1 + \frac{R_4}{R_5}\right) \frac{\$ \frac{1}{R} \cdot \sqrt{\frac{L}{C}}}{\$^2 + \$ \frac{1}{R} \cdot \sqrt{\frac{L}{C}} + \frac{1}{m_\omega^2 \cdot C L}}}$$