Proiect
Sisteme de Gestiune a Bazelor de Date

Informatica – Anul 2

Ilie Petre Cristian

Grupa 233

Prezentarea bazei de date

Baza de date realizeaza gestionarea informatiilor organizatorice si functionale ale unei scoli de soferi. Aceasta poate avea mai multe sedii in care lucreaza secretari si in care se tin lectiile teoretice. La aceste lectii participa atat un profesor de legislatie (angajat al scolii) cat si clienti. Acesti clienti pot participa la lectiile teoretice indiferent de sediul unde sunt sustinute, primind (in urma participarii) prezente. Clientul, in prezenta unui secretar, semneaza un contract cu scoala de soferi care poate fi platit in mai multe transe.
La aceasta firma mai sunt angajati si instructori auto ce realizeaza orele de pregatire practica. La aceste lectii participa un client si este utilizat un automobil detinut de firma. Dupa terminarea cursurilor de pregatire practica (precum si acumularea prezentelor anterior descrise) clientul poate sustine examenul teoretic iar ulterior, daca acesta promoveaza, poate participa si la examenul practic, scoala de soferi tinand cont de toate incercarile clientului in cauza.

Diagrama Entitate – Relatie

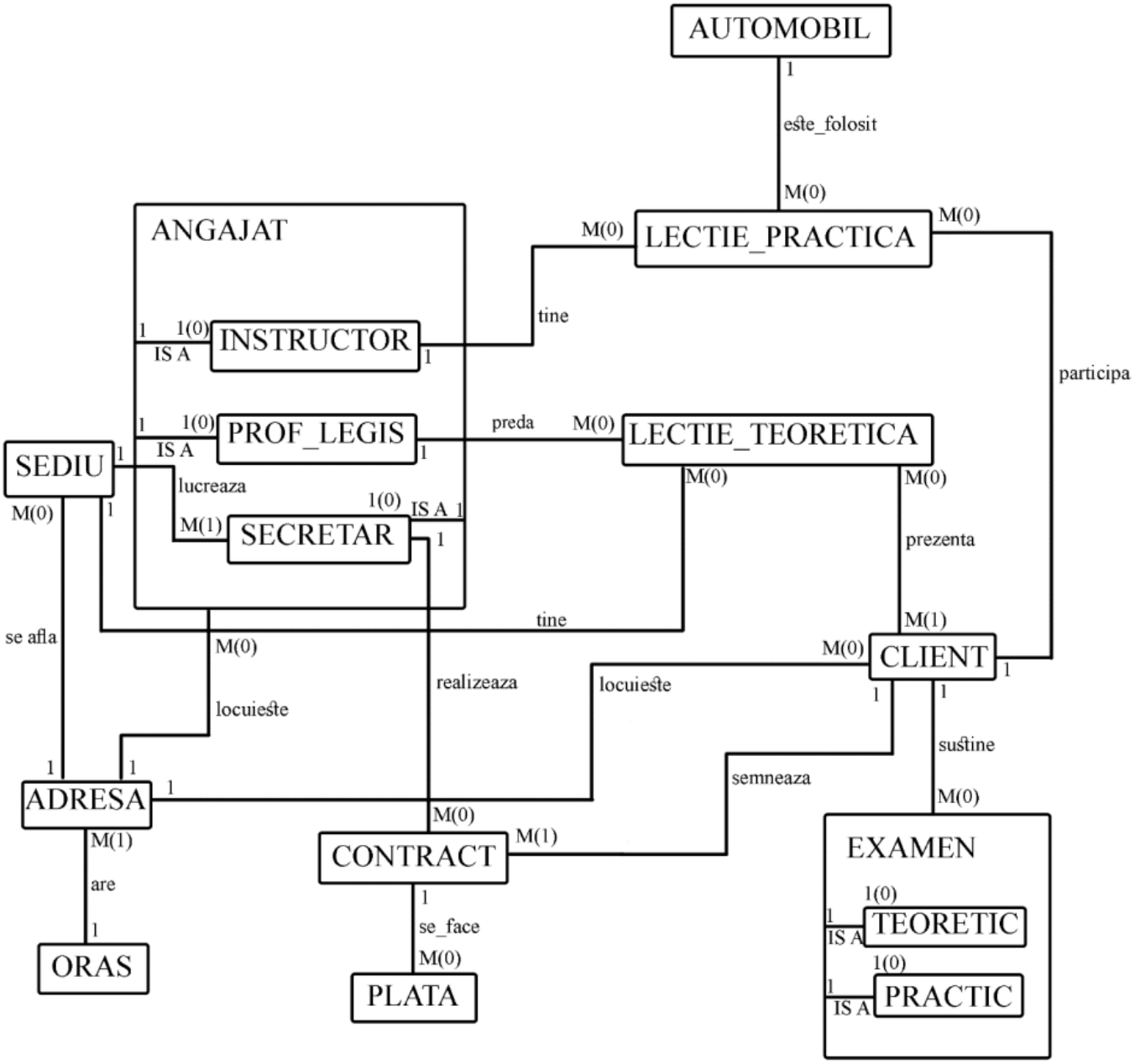

Diagrama Conceptuala

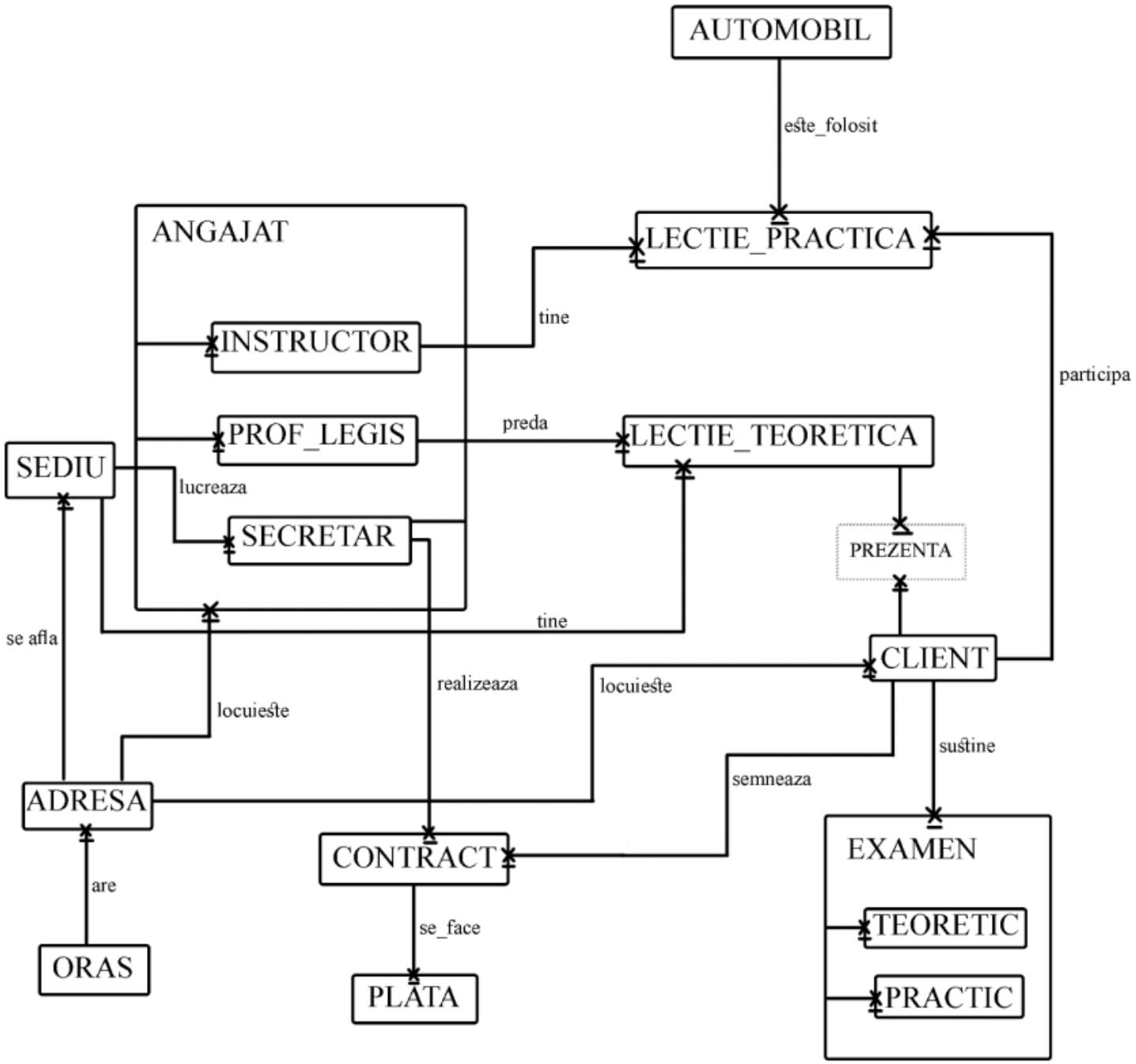

Crearea tabelelor si adaugarea de informatii

---------- 4+5) Creare tabele ----------

```
create table ORAS(
id_oras number(5) constraint id_oras_pk primary key,
denumire varchar2(50) constraint denumire_oras_nn not null
);

create sequence orase
start with 1
increment by 1;

insert into ORAS
values (orase.nextval,'Bucuresti');
insert into ORAS
values (orase.nextval,'Giurgiu');
insert into ORAS
values (orase.nextval,'Popesti-Leordeni');
insert into ORAS
values (orase.nextval,'Focsani');
insert into ORAS
values (orase.nextval,'Buzau');

select *
from oras;
```

```
create table ADRESA(
id_adresa number(5) constraint id_adresa_pk primary key,
```

```
id_oras number(5) constraint adresa_oras_nn not null,
cod_postal number(6) constraint cod_postal_nn not null,
info_adresa varchar2(60),
foreign key (id_oras) references ORAS(id_oras)
);

create sequence adrese
start with 150
increment by 1;

insert into ADRESA (id_adresa,id_oras,cod_postal)
values (adrese.nextval,3,123456);
insert into ADRESA
values (adrese.nextval,4,512312,'Str. Stadionului, Nr. 45, Bl.2');
insert into ADRESA
values (adrese.nextval,5,278912,'Str. Gheorghe Doja Nr. 101');
insert into ADRESA
values (adrese.nextval,1,278912,'Str. Republicii Nr.1, Bl.18, Sc.2, Ap. 27');
insert into ADRESA
values (adrese.nextval,2,703503,'Str.  Constantin Nottara, Bl. C/10, Ap. 3');
insert into ADRESA
values (adrese.nextval,2,408857,'Calea Eroilor nr. 70, bl. C, ap. 86');
insert into ADRESA
values (adrese.nextval,3,250633,'Calea Invatatorului 77, Mun. Cazanesti');
insert into ADRESA
values (adrese.nextval,1,777345,'B-dul. Croitorilor 853, Mun. Piatra-Olt, Olt');
insert into ADRESA
values (adrese.nextval,4,429313,'Calea J.J Rousseau nr. 75, bl. 8, ap. 02');
insert into ADRESA
values (adrese.nextval,5,732233,'Calea P?durii 9B, SÃ¢ntana');
```

```
insert into ADRESA
values (adrese.nextval,5,236728,'Splaiul Mircea cel B?trÃ¢n nr. 24, bl. B, ap. 96');
insert into ADRESA
values (adrese.nextval,4,205367,'Str. Vlad ?epe? 3, Mun. Piatra-Olt, Alba');
insert into ADRESA
values (adrese.nextval,1,566457,'Calea Some? 781');
insert into ADRESA
values (adrese.nextval,1,610487,'Splaiul Piersicului nr. 1/3, bl. C, ap. 4');
insert into ADRESA
values (adrese.nextval,1,251695,'Splaiul Mircea cel B?trÃ¢n nr. 8B, bl. 31, ap. 52');

select *
from adresa;
--------------------------------------------------------------------------------
create table ANGAJAT(
id_angajat number(5) constraint id_angajat_pk primary key,
nume varchar2(30) constraint nume_nn not null,
prenume varchar2(30) constraint prenume_nn not null,
id_adresa number(5) constraint angajat_adresa_nn not null,
nr_telefon varchar2(15) constraint nr_telefon_nn not null,
email varchar2(320),
cnp varchar(13) constraint cnp_nn not null,
foreign key (id_adresa) references ADRESA(id_adresa)
);

create sequence angajati
start with 300
increment by 1;

insert into angajat(id_angajat,nume,prenume,id_adresa,nr_telefon,cnp)
```

```
values (angajati.nextval,'Ana','Macovei',151,'0273833014','2910509017336');

insert into angajat(id_angajat,nume,prenume,id_adresa,nr_telefon,cnp)

values (angajati.nextval,'Tudor','Mihai',153,'0771267946','1910273219266');

insert into angajat(id_angajat,nume,prenume,id_adresa,nr_telefon,cnp)

values (angajati.nextval,'Lidia','Ardelean',158,'0273833014','2970325016504');

insert into angajat

values
(angajati.nextval,'Lazar','Niculescu',155,'0713702623','lazarcu@gmail.com','2910509017336');

insert into angajat

values
(angajati.nextval,'Julia','Botezatu',150,'0363617583','juliabo@gmail.com','2970801416971');

insert into angajat

values
(angajati.nextval,'Nelu','Teodorescu',151,'0351276737','nelutescu@gmail.com','1910305417705')
;

insert into angajat

values (angajati.nextval,'Gina','Ene',153,'0230865520','ginane@gmail.com','2880616314790');

insert into angajat

values
(angajati.nextval,'Avram','Mihai',154,'0249576019','avramula@gmail.com','1990305103710');

insert into angajat

values
(angajati.nextval,'Marcel','Simionescu',156,'0362000525','marcescu@gmail.com','195041607197
4');

insert into angajat

values
(angajati.nextval,'Delia','Blaga',152,'0756529565','deliablaga@gmail.com','2981128234029');

insert into angajat

values
(angajati.nextval,'Ortansa','Toma',151,'0780347918','ortama@gmail.com','2900405098050');

insert into angajat

values
(angajati.nextval,'Laurentiu','Nicolae',161,'0219039494','laurnic@gmail.com','1860712366795');
```

```
insert into angajat
values (angajati.nextval,'Jan','Filip',163,'0719319182','janflip@gmail.com','5020202209100');
insert into angajat
values
(angajati.nextval,'Valentina','Chirila',164,'0746203124','valela@gmail.com','6010528100830');
insert into angajat
values
(angajati.nextval,'Timotei','Rusu',160,'0244886450','timotsu@gmail.com','1871221321071');

select *
from angajat;
--------------------------------------------------------------------------------
create table SEDIU(
id_sediu number(5) constraint id_sediu_pk primary key,
id_adresa number(5) constraint sediu_adresa_nn not null,
foreign key (id_adresa) references ADRESA(id_adresa)
);

create sequence sedii
start with 500
increment by 1;

insert into sediu
values (sedii.nextval,152);
insert into sediu
values (sedii.nextval,154);
insert into sediu
values (sedii.nextval,156);
insert into sediu
values (sedii.nextval,157);
```

```
insert into sediu
values (sedii.nextval,159);

select *
from sediu;
--------------------------------------------------------------------------------
create table INSTRUCTOR (
id_angajat number(5) constraint id_instructor_pk primary key,
data_carnet date constraint data_carnet_nn not null,
foreign key (id_angajat) references ANGAJAT(id_angajat)
);

insert into instructor
values (301,to_date('11/03/1998','DD/MM/YYYY'));
insert into instructor
values (303,to_date('27/05/2001','DD/MM/YYYY'));
insert into instructor
values (304,to_date('13/01/2004','DD/MM/YYYY'));
insert into instructor
values (343,to_date('13/01/2004','DD/MM/YYYY'));
insert into instructor
values (347,to_date('13/01/2004','DD/MM/YYYY'));

select *
from instructor;
--------------------------------------------------------------------------------
create table PROF_LEGIS(
id_angajat number(5) constraint id_prof_pk primary key,
tip_fac varchar2(25) constraint tip_fac_nn not null,
data_exam date constraint data_exam_nn not null,
```

```
constraint CHK_tip_fac check (lower(tip_fac) in ('tehnic','juridic')),
foreign key (id_angajat) references ANGAJAT(id_angajat)
);

insert into prof_legis
values (302,'Tehnic',to_date('27/04/2019','DD/MM/YYYY'));
insert into prof_legis
values (320,'Tehnic',to_date('13/02/2016','DD/MM/YYYY'));
insert into prof_legis
values (340,'Juridic',to_date('05/07/2020','DD/MM/YYYY'));
insert into prof_legis
values (341,'Tehnic',to_date('12/07/2020','DD/MM/YYYY'));
insert into prof_legis
values (342,'Juridic',to_date('04/09/2018','DD/MM/YYYY'));

select *
from prof_legis;
-----------------------------------------------------------------------------
create table SECRETAR(
id_angajat number(5) constraint id_secretar_pk primary key,
id_sediu number(5) constraint secretar_sediu_nn not null,
foreign key (id_angajat) references ANGAJAT(id_angajat),
foreign key (id_sediu) references SEDIU(id_sediu)
);


insert into secretar
values (300,501);
insert into secretar
values (344,502);
```

```
insert into secretar
values (345,503);
insert into secretar
values (346,504);
insert into secretar
values (348,500);

select *
from secretar;
-----------------------------------------------------------------------------
create table AUTOMOBIL(
id_automobil number(5) constraint id_automobil_pk primary key,
marca varchar2(30) constraint marca_nn not null,
model varchar2(30),
categorie_automobil varchar2(2) constraint categorie_nn not null,
constraint CHK_cat_auto check(lower(categorie_automobil) in ('a1','a2','b1','be','b'))
);

create sequence automobile
start with 750
increment by 1;

insert into automobil
values (automobile.nextval,'Honda','CBR 125R','A1');
insert into automobil
values (automobile.nextval,'Ducati','Cafe Racer','A2');
insert into automobil
values (automobile.nextval,'Aixam','Coupe GTI','B1');
insert into automobil
values (automobile.nextval,'Volkswagen','Passat','B');
```

```
insert into automobil(id_automobil,marca,categorie_automobil)
values (automobile.nextval,'BMW','BE');

select *
from automobil;
--------------------------------------------------------------------------------
create table CLIENT(
id_client number(5) constraint id_client_pk primary key,
nume varchar2(30) constraint nume_client_nn not null,
prenume varchar2(30) constraint prenume_client_nn not null,
data_nasterii date constraint datanasterii_nn not null,
id_adresa number(5) constraint client_adresa_nn not null,
nr_telefon varchar2(15) constraint nr_telefon_client_nn not null,
email varchar2(320),
cnp varchar(13) constraint cnp_client_nn not null,
foreign key (id_adresa) references ADRESA(id_adresa)
);

create sequence clienti
start with 1000
increment by 1;

insert into client
values
(clienti.nextval,'Anuta','Stoica',to_date('06/12/2000','DD/MM/YYYY'),164,'0718465446','anutaca@gmail.com','2880904356822');
insert into client
values
(clienti.nextval,'Visaron','Ionescu',to_date('02/03/1989','DD/MM/YYYY'),162,'0781572802','visaion@gmail.com','1860622454782');
insert into client
```

```
values
(clienti.nextval,'Lavinia','Farcas',to_date('13/08/1999','DD/MM/YYYY'),161,'0753974373','lavinias@gmail.com','2921116016491');

insert into client

values
(clienti.nextval,'Calin','Catana',to_date('25/03/2001','DD/MM/YYYY'),163,'0377556929','calincana@gmail.com','1880915165075');

insert into client

values
(clienti.nextval,'Isabela','Pana',to_date('16/04/1992','DD/MM/YYYY'),158,'0346918264','isabelana@gmail.com','2960331113593');


select *

from client;

--------------------------------------------------------------------------------

create table LECTIE_PRACTICA(

id_lectiepr number(5) constraint id_lectiepr_pk primary key,

id_instructor number(5) constraint lpr_instructor_nn not null,

id_elev number(5) constraint lpr_elev_nn not null,

id_automobil number(5) constraint lpr_automobil_nn not null,

data date constraint data_lpr_nn not null,

km_parcursi float(5) constraint km_nn not null,

foreign key (id_instructor) references INSTRUCTOR(id_angajat),

foreign key (id_elev) references CLIENT(id_client),

foreign key (id_automobil) references AUTOMOBIL(id_automobil)

);


create sequence practice

start with 1500

increment by 1;


insert into lectie_practica
```

```
values (practice.nextval,303,1001,750,to_date('23/07/2020','DD/MM/YYYY'),23);
insert into lectie_practica
values (practice.nextval,303,1002,750,to_date('25/07/2020','DD/MM/YYYY'),20);
insert into lectie_practica
values (practice.nextval,301,1001,752,to_date('23/07/2020','DD/MM/YYYY'),21.5);
insert into lectie_practica
values (practice.nextval,343,1003,753,to_date('28/07/2020','DD/MM/YYYY'),24.8);
insert into lectie_practica
values (practice.nextval,347,1004,754,to_date('02/08/2020','DD/MM/YYYY'),19.5);

select *
from lectie_practica;
-------------------------------------------------------------------------------
create table contract(
id_contract number(5) constraint id_contract_pk primary key,
id_secretar number(5) constraint contract_secretar_nn not null,
id_client number(5) constraint contract_client_nn not null,
data_semnare date constraint contract_data_nn not null,
detalii_contract varchar2(255) constraint detalii_nn not null,
foreign key (id_secretar) references SECRETAR(id_angajat),
foreign key (id_client) references CLIENT(id_client)
);

create sequence contracte
start with 2000
increment by 1;

insert into contract
values (contracte.nextval,344,1000,to_date('13/3/2020','DD/MM/YYYY'),'Pret: 2200 lei');
insert into contract
```

```
values (contracte.nextval,346,1001,to_date('17/07/2020','DD/MM/YYYY'),'Pret: 2450 lei');
insert into contract
values (contracte.nextval,348,1002,to_date('19/07/2020','DD/MM/YYYY'),'Pret: 2200 lei');
insert into contract
values (contracte.nextval,346,1003,to_date('20/07/2020','DD/MM/YYYY'),'Pret: 1400 lei,
Categoria A1');
insert into contract
values (contracte.nextval,300,1004,to_date('28/09/2020','DD/MM/YYYY'),'Pret 2200 lei');

select *
from contract;
--------------------------------------------------------------------------------
create table plata(
id_plata number(5) constraint plata_pk primary key,
id_contract number(5) constraint plata_contract_nn not null,
data date,
suma number(10) constraint suma_nn not null,
foreign key (id_contract) references CONTRACT(id_contract)
);

create sequence plati
start with 2500
increment by 1;

insert into plata
values (plati.nextval,2001,to_date('17/03/2020','DD/MM/YYYY'),750);
insert into plata
values (plati.nextval,2002,to_date('18/08/2020','DD/MM/YYYY'),500);
insert into plata
values (plati.nextval,2003,to_date('19/06/2020','DD/MM/YYYY'),1000);
```

```
insert into plata
values (plati.nextval,2003,to_date('27/06/2020','DD/MM/YYYY'),1000);
insert into plata
values (plati.nextval,2003,to_date('05/08/2020','DD/MM/YYYY'),200);

select *
from plata;
-------------------------------------------------------------------------------
create table LECTIE_TEORETICA(
id_lectietr number(5) constraint lectietr_pk primary key,
id_profesor number(5) constraint teor_prof_nn not null,
id_sediu number(5) constraint teor_sediu_nn not null,
data date constraint teor_data_nn not null,
detalii_suplimentare varchar2(150),
foreign key (id_profesor) references PROF_LEGIS(id_angajat),
foreign key (id_sediu) references SEDIU(id_sediu)
);

create sequence teoretice
start with 3000
increment by 1;

insert into lectie_teoretica
values (teoretice.nextval,342,500,to_date('25/03/2021','DD/MM/YYYY'),'Chestionare');
insert into lectie_teoretica
values (teoretice.nextval,320,501,to_date('16/04/2021','DD/MM/YYYY'),'Intrebari indicatoare');
insert into lectie_teoretica
values (teoretice.nextval,320,502,to_date('23/02/2021','DD/MM/YYYY'),'Intrebari semnale');
insert into lectie_teoretica
values (teoretice.nextval,340,501,to_date('15/01/2021','DD/MM/YYYY'),'Intrebari mecanica');
```

```
insert into lectie_teoretica
values (teoretice.nextval,341,504,to_date('10/02/2021','DD/MM/YYYY'),'Chestionare');

select *
from lectie_teoretica;
--------------------------------------------------------------------------------
create table PREZENTA(
id_lectie number(5) constraint prezenta_lectie_nn not null,
id_elev number(5) constraint prezenta_elev_nn not null,
foreign key (id_lectie) references lectie_teoretica(id_lectietr),
foreign key (id_elev) references client(id_client)
);

insert into prezenta
values (3000,1002);
insert into prezenta
values (3000,1003);
insert into prezenta
values (3002,1002);
insert into prezenta
values (3003,1002);
insert into prezenta
values (3003,1003);
insert into prezenta
values (3001,1000);
insert into prezenta
values (3004,1001);
insert into prezenta
values (3004,1003);
insert into prezenta
```

```
values (3003,1001);
insert into prezenta
values (3002,1000);

select *
from prezenta;
-------------------------------------------------------------------------------
create table EXAMEN(
id_examen number(5) constraint examen_id_pk primary key,
id_elev number(5) constraint examen_elev_nn not null,
data date constraint examen_data_nn not null,
calificativ varchar2(10) constraint examen_cal_nn not null,
foreign key (id_elev) references CLIENT(id_client),
constraint CHK_CAL CHECK (lower(calificativ) in ('admis','respins'))
);

create sequence examene
start with 3500
increment by 1;

insert into examen
values (examene.nextval,1000,to_date('27/11/2019','DD/MM/YYYY'),'Admis');
insert into examen
values (examene.nextval,1000,to_date('13/01/2020','DD/MM/YYYY'),'Admis');
insert into examen
values (examene.nextval,1001,to_date('13/05/2020','DD/MM/YYYY'),'Respins');
insert into examen
values (examene.nextval,1001,to_date('25/07/2020','DD/MM/YYYY'),'Respins');
insert into examen
values (examene.nextval,1001,to_date('27/08/2020','DD/MM/YYYY'),'Admis');
```

```
insert into examen
values (examene.nextval,1002,to_date('14/05/2020','DD/MM/YYYY'),'Respins');
insert into examen
values (examene.nextval,1002,to_date('27/05/2020','DD/MM/YYYY'),'Respins');
insert into examen
values (examene.nextval,1003,to_date('10/07/2020','DD/MM/YYYY'),'Admis');
insert into examen
values (examene.nextval,1003,to_date('11/07/2020','DD/MM/YYYY'),'Respins');
insert into examen
values (examene.nextval,1003,to_date('23/09/2020','DD/MM/YYYY'),'Admis');

select *
from examen;
--------------------------------------------------------------------------------
create table TEORETIC(
id_examen number(5) constraint examen_teoretic_pk primary key,
punctaj number(2) constraint teoretic_punct_nn not null,
foreign key (id_examen) references examen(id_examen)
);

insert into teoretic
values (3500,23);
insert into teoretic
values (3502,19);
insert into teoretic
values (3503,20);
insert into teoretic
values (3504,22);
insert into teoretic
values (3505,16);
```

```
select *
from teoretic;
--------------------------------------------------------------------------------
create table PRACTIC(
id_examen number(5) constraint examen_practic_pk primary key,
puncte_penalizare number(3) constraint pct_nn not null,
foreign key (id_examen) references examen(id_examen)
);

insert into practic
values (3501,5);
insert into practic
values (3506,36);
insert into practic
values (3507,19);
insert into practic
values (3508,102);
insert into practic
values (3509,0);

select *
from practic;
--------------------------------------------------------------------------------
```

```
create table ORAS(
id_oras number(5) constraint id_oras_pk primary key,
denumire varchar2(50) constraint denumire_oras_nn not null
);

create sequence orase
start with 1
increment by 1;

insert into ORAS
values (orase.nextval,'Bucuresti');
insert into ORAS
values (orase.nextval,'Giurgiu');
insert into ORAS
values (orase.nextval,'Popesti-Leordeni');
insert into ORAS
values (orase.nextval,'Focsani');
insert into ORAS
values (orase.nextval,'Buzau');

select *
from oras;
```

Query Result

SQL | All Rows Fetched: 5 in 0.008 seconds

	ID_ORAS	DENUMIRE
1	1	Bucuresti
2	2	Giurgiu
3	3	Popesti-Leordeni
4	4	Focsani
5	5	Buzau

```
values (adrese.nextval,2,408857,'Calea Eroilor nr. 70, bl. C, ap. 86');
insert into ADRESA
values (adrese.nextval,3,250633,'Calea Invatatorului 77, Mun. Cazanesti');
insert into ADRESA
values (adrese.nextval,1,777345,'B-dul. Croitorilor 853, Mun. Piatra-Olt, Olt');
insert into ADRESA
values (adrese.nextval,4,429313,'Calea J.J Rousseau nr. 75, bl. 8, ap. 02');
insert into ADRESA
values (adrese.nextval,5,732233,'Calea P?durii 9B, SÃ©ntana');
insert into ADRESA
values (adrese.nextval,5,236728,'Splaiul Mircea cel B?trÃ©n nr. 24, bl. B, ap. 96');
insert into ADRESA
values (adrese.nextval,4,205367,'Str. Vlad ?epe? 3, Mun. Piatra-Olt, Alba');
insert into ADRESA
values (adrese.nextval,1,566457,'Calea Some? 781');
insert into ADRESA
values (adrese.nextval,1,610487,'Splaiul Piersicului nr. 1/3, bl. C, ap. 4');
insert into ADRESA
values (adrese.nextval,1,251695,'Splaiul Mircea cel B?trÃ©n nr. 8B, bl. 31, ap. 52');

select *
from adresa;
--------------------------------------------------------------------------
create table ANGAJAT(
```

Query Result

SQL | All Rows Fetched: 15 in 0.004 seconds

	ID_ADRESA	ID_ORAS	COD_POSTAL	INFO_ADRESA
1	150	3	123456	(null)
2	151	4	512312	Str. Stadionului, Nr. 45, Bl.2
3	152	5	278912	Str. Gheorghe Doja Nr. 101
4	153	1	278912	Str. Constantin Nottara, Bl. C/10, Ap. 3
5	154	1	278912	Str. Republicii Nr.1, Bl.18, Sc.2, Ap. 27
6	155	2	408857	Calea Eroilor nr. 70, bl. C, ap. 86
7	156	3	250633	Calea Invatatorului 77, Mun. Cazanesti
8	157	1	777345	B-dul. Croitorilor 853, Mun. Piatra-Olt, Olt
9	158	4	429313	Calea J.J Rousseau nr. 75, bl. 8, ap. 02
10	159	5	732233	Calea Pădurii 9B, Sântana
11	160	5	236728	Splaiul Mircea cel Bătrân nr. 24, bl. B, ap. 96
12	161	4	205367	Str. Vlad Țepeș 3, Mun. Piatra-Olt, Alba
13	162	1	566457	Calea Someș 781
14	163	1	610487	Splaiul Piersicului nr. 1/3, bl. C, ap. 4
15	164	1	251695	Splaiul Mircea cel Bătrân nr. 8B, bl. 31, ap. 52

```
insert into angajat
values (angajati.nextval,'Nelu','Teodorescu',151,'0351276737','nelutescu@gmail.com','1910305417705');
insert into angajat
values (angajati.nextval,'Gina','Ene',153,'0230865520','ginane@gmail.com','2880616314790');
insert into angajat
values (angajati.nextval,'Avram','Mihai',154,'0249576019','avramula@gmail.com','1990305103710');
insert into angajat
values (angajati.nextval,'Marcel','Simionescu',156,'0362000525','marcescu@gmail.com','1950416071974');
insert into angajat
values (angajati.nextval,'Delia','Blaga',152,'0756529565','deliablaga@gmail.com','2981128234029');
insert into angajat
values (angajati.nextval,'Ortansa','Toma',151,'0780347918','ortama@gmail.com','2900405098050');
insert into angajat
values (angajati.nextval,'Laurentiu','Nicolae',161,'0219039494','laurnic@gmail.com','1860712366795');
insert into angajat
values (angajati.nextval,'Jan','Filip',163,'0719319182','janflip@gmail.com','5020202209100');
insert into angajat
values (angajati.nextval,'Valentina','Chirila',164,'0746203124','valela@gmail.com','6010528100830');
insert into angajat
values (angajati.nextval,'Timotei','Rusu',160,'0244886450','timotsu@gmail.com','1871221321071');

select *
from angajat;
-----------------------------------------------------------------------------
```

Query Result ×

SQL | All Rows Fetched: 15 in 0.012 seconds

	ID_ANGAJAT	NUME	PRENUME	ID_ADRESA	NR_TELEFON	EMAIL	CNP
1	300	Ana	Macovei	151	0273833014	(null)	2910509017336
2	301	Tudor	Mihai	153	0771267946	(null)	1910273219266
3	302	Lidia	Ardelean	158	0273833014	(null)	2970325016504
4	303	Lazar	Niculescu	155	0713702623	lazarcu@gmail.com	2910509017336
5	304	Julia	Botezatu	150	0363617583	juliabo@gmail.com	2970801416971
6	320	Nelu	Teodorescu	151	0351276737	nelutescu@gmail.com	1910305417705
7	340	Gina	Ene	153	0230865520	ginane@gmail.com	2880616314790
8	341	Avram	Mihai	154	0249576019	avramula@gmail.com	1990305103710
9	342	Marcel	Simionescu	156	0362000525	marcescu@gmail.com	1950416071974
10	343	Delia	Blaga	152	0756529565	deliablaga@gmail.com	2981128234029
11	344	Ortansa	Toma	151	0780347918	ortama@gmail.com	2900405098050
12	345	Laurentiu	Nicolae	161	0219039494	laurnic@gmail.com	1860712366795
13	346	Jan	Filip	163	0719319182	janflip@gmail.com	5020202209100
14	347	Valentina	Chirila	164	0746203124	valela@gmail.com	6010528100830
15	348	Timotei	Rusu	160	0244886450	timotsu@gmail.com	1871221321071

```sql
create table SEDIU(
id_sediu number(5) constraint id_sediu_pk primary key,
id_adresa number(5) constraint sediu_adresa_nn not null,
foreign key (id_adresa) references ADRESA(id_adresa)
);

create sequence sedii
start with 500
increment by 1;

insert into sediu
values (sedii.nextval,152);
insert into sediu
values (sedii.nextval,154);
insert into sediu
values (sedii.nextval,156);
insert into sediu
values (sedii.nextval,157);
insert into sediu
values (sedii.nextval,159);

select *
from sediu;
```

Query Result

SQL | All Rows Fetched: 5 in 0.008 seconds

	ID_SEDIU	ID_ADRESA
1	500	152
2	501	154
3	502	156
4	503	157
5	504	159

```sql
create table INSTRUCTOR (
id_angajat number(5) constraint id_instructor_pk primary key,
data_carnet date constraint data_carnet_nn not null,
foreign key (id_angajat) references ANGAJAT(id_angajat)
);

insert into instructor
values (301,to_date('11/03/1998','DD/MM/YYYY'));
insert into instructor
values (303,to_date('27/05/2001','DD/MM/YYYY'));
insert into instructor
values (304,to_date('13/01/2004','DD/MM/YYYY'));
insert into instructor
values (343,to_date('13/01/2004','DD/MM/YYYY'));
insert into instructor
values (347,to_date('13/01/2004','DD/MM/YYYY'));

select *
from instructor;
--------------------------------------------------------------
create table PROF_LEGIS(
```

Query Result

SQL | All Rows Fetched: 5 in 0.006 seconds

	ID_ANGAJAT	DATA_CARNET
1	301	11-MAR-98
2	303	27-MAY-01
3	304	13-JAN-04
4	343	13-JAN-04
5	347	13-JAN-04

```sql
create table PROF_LEGIS(
id_angajat number(5) constraint id_prof_pk primary key,
tip_fac varchar2(25) constraint tip_fac_nn not null,
data_exam date constraint data_exam_nn not null,
constraint CHK_tip_fac check (lower(tip_fac) in ('tehnic','juridic')),
foreign key (id_angajat) references ANGAJAT(id_angajat)
);

insert into prof_legis
values (302,'Tehnic',to_date('27/04/2019','DD/MM/YYYY'));
insert into prof_legis
values (320,'Tehnic',to_date('13/02/2016','DD/MM/YYYY'));
insert into prof_legis
values (340,'Juridic',to_date('05/07/2020','DD/MM/YYYY'));
insert into prof_legis
values (341,'Tehnic',to_date('12/07/2020','DD/MM/YYYY'));
insert into prof_legis
values (342,'Juridic',to_date('04/09/2018','DD/MM/YYYY'));

select *
from prof_legis;
```

ery Result

SQL | All Rows Fetched: 5 in 0.007 seconds

	ID_ANGAJAT	TIP_FAC	DATA_EXAM
1	302	Tehnic	27-APR-19
2	320	Tehnic	13-FEB-16
3	340	Juridic	05-JUL-20
4	341	Tehnic	12-JUL-20
5	342	Juridic	04-SEP-18

```sql
create table SECRETAR(
id_angajat number(5) constraint id_secretar_pk primary key,
id_sediu number(5) constraint secretar_sediu_nn not null,
foreign key (id_angajat) references ANGAJAT(id_angajat),
foreign key (id_sediu) references SEDIU(id_sediu)
);


insert into secretar
values (300,501);
insert into secretar
values (344,502);
insert into secretar
values (345,503);
insert into secretar
values (346,504);
insert into secretar
values (348,500);

select *
from secretar;
```

Query Result

SQL | All Rows Fetched: 5 in 0.007 seconds

	ID_ANGAJAT	ID_SEDIU
1	300	501
2	344	502
3	345	503
4	346	504
5	348	500

```
create table AUTOMOBIL(
id_automobil number(5) constraint id_automobil_pk primary key,
marca varchar2(30) constraint marca_nn not null,
model varchar2(30),
categorie_automobil varchar2(2) constraint categorie_nn not null,
constraint CHK_cat_auto check(lower(categorie_automobil) in ('a1','a2','b1','be','b'))
);

create sequence automobile
start with 750
increment by 1;

insert into automobil
values (automobile.nextval,'Honda','CBR 125R','A1');
insert into automobil
values (automobile.nextval,'Ducati','Cafe Racer','A2');
insert into automobil
values (automobile.nextval,'Aixam','Coupe GTI','B1');
insert into automobil
values (automobile.nextval,'Volkswagen','Passat','B');
insert into automobil(id_automobil,marca,categorie_automobil)
values (automobile.nextval,'BMW','BE');

select *
from automobil;
```

Query Result

SQL | All Rows Fetched: 5 in 0.007 seconds

	ID_AUTOMOBIL	MARCA	MODEL	CATEGORIE_AUTOMOBIL
1	750	Honda	CBR 125R	A1
2	751	Ducati	Cafe Racer	A2
3	752	Aixam	Coupe GTI	B1
4	753	Volkswagen	Passat	B
5	754	BMW	(null)	BE

```sql
create table CLIENT(
id_client number(5) constraint id_client_pk primary key,
nume varchar2(30) constraint nume_client_nn not null,
prenume varchar2(30) constraint prenume_client_nn not null,
data_nasterii date constraint datanasterii_nn not null,
id_adresa number(5) constraint client_adresa_nn not null,
nr_telefon varchar2(15) constraint nr_telefon_client_nn not null,
email varchar2(320),
cnp varchar(13) constraint cnp_client_nn not null,
foreign key (id_adresa) references ADRESA(id_adresa)
);

create sequence clienti
start with 1000
increment by 1;

insert into client
values (clienti.nextval,'Anuta','Stoica',to_date('06/12/2000','DD/MM/YYYY'),164,'0718465446','anutaca@gmail.com','2880904356822');
insert into client
values (clienti.nextval,'Visaron','Ionescu',to_date('02/03/1989','DD/MM/YYYY'),162,'0781572802','visaion@gmail.com','1860622454782');
insert into client
values (clienti.nextval,'Lavinia','Farcas',to_date('13/08/1999','DD/MM/YYYY'),161,'0753974373','lavinias@gmail.com','2921116016491');
insert into client
values (clienti.nextval,'Calin','Catana',to_date('25/03/2001','DD/MM/YYYY'),163,'0377556929','calincana@gmail.com','1880915165075');
insert into client
values (clienti.nextval,'Isabela','Pana',to_date('16/04/1992','DD/MM/YYYY'),158,'0346918264','isabelana@gmail.com','2960331113593');

select *
from client;
```

Query Result

SQL | All Rows Fetched: 5 in 0.009 seconds

	ID_CLIENT	NUME	PRENUME	DATA_NASTERII	ID_ADRESA	NR_TELEFON	EMAIL	CNP
1	1000	Anuta	Stoica	06-DEC-00	164	0718465446	anutaca@gmail.com	2880904356822
2	1001	Visaron	Ionescu	02-MAR-89	162	0781572802	visaion@gmail.com	1860622454782
3	1002	Lavinia	Farcas	13-AUG-99	161	0753974373	lavinias@gmail.com	2921116016491
4	1003	Calin	Catana	25-MAR-01	163	0377556929	calincana@gmail.com	1880915165075
5	1004	Isabela	Pana	16-APR-92	158	0346918264	isabelana@gmail.com	2960331113593

```sql
create table LECTIE_PRACTICA(
id_lectiepr number(5) constraint id_lectiepr_pk primary key,
id_instructor number(5) constraint lpr_instructor_nn not null,
id_elev number(5) constraint lpr_elev_nn not null,
id_automobil number(5) constraint lpr_automobil_nn not null,
data date constraint data_lpr_nn not null,
km_parcursi float(5) constraint km_nn not null,
foreign key (id_instructor) references INSTRUCTOR(id_angajat),
foreign key (id_elev) references CLIENT(id_client),
foreign key (id_automobil) references AUTOMOBIL(id_automobil)
);

create sequence practice
start with 1500
increment by 1;

insert into lectie_practica
values (practice.nextval,303,1001,750,to_date('23/07/2020','DD/MM/YYYY'),23);
insert into lectie_practica
values (practice.nextval,303,1002,750,to_date('25/07/2020','DD/MM/YYYY'),20);
insert into lectie_practica
values (practice.nextval,301,1001,752,to_date('23/07/2020','DD/MM/YYYY'),21.5);
insert into lectie_practica
values (practice.nextval,343,1003,753,to_date('28/07/2020','DD/MM/YYYY'),24.8);
insert into lectie_practica
values (practice.nextval,347,1004,754,to_date('02/08/2020','DD/MM/YYYY'),19.5);

select *
from lectie_practica;
```

Query Result

SQL | All Rows Fetched: 5 in 0.011 seconds

	ID_LECTIEPR	ID_INSTRUCTOR	ID_ELEV	ID_AUTOMOBIL	DATA	KM_PARCURSI
1	1500	303	1001	750	23-JUL-20	23
2	1501	303	1002	750	25-JUL-20	20
3	1502	301	1001	752	23-JUL-20	22
4	1503	343	1003	753	28-JUL-20	25
5	1504	347	1004	754	02-AUG-20	20

```
create table contract(
id_contract number(5) constraint id_contract_pk primary key,
id_secretar number(5) constraint contract_secretar_nn not null,
id_client number(5) constraint contract_client_nn not null,
data_semnare date constraint contract_data_nn not null,
detalii_contract varchar2(255) constraint detalii_nn not null,
foreign key (id_secretar) references SECRETAR(id_angajat),
foreign key (id_client) references CLIENT(id_client)
);

create sequence contracte
start with 2000
increment by 1;

insert into contract
values (contracte.nextval,344,1000,to_date('13/3/2020','DD/MM/YYYY'),'Pret: 2200 lei');
insert into contract
values (contracte.nextval,346,1001,to_date('17/07/2020','DD/MM/YYYY'),'Pret: 2450 lei');
insert into contract
values (contracte.nextval,348,1002,to_date('19/07/2020','DD/MM/YYYY'),'Pret: 2200 lei');
insert into contract
values (contracte.nextval,346,1003,to_date('20/07/2020','DD/MM/YYYY'),'Pret: 1400 lei, Categoria A1');
insert into contract
values (contracte.nextval,300,1004,to_date('28/09/2020','DD/MM/YYYY'),'Pret 2200 lei');

select *
from contract;
```

Script Output × | Query Result ×

SQL | All Rows Fetched: 5 in 0.004 seconds

	ID_CONTRACT	ID_SECRETAR	ID_CLIENT	DATA_SEMNARE	DETALII_CONTRACT
1	2001	344	1000	13-MAR-20	Pret: 2200 lei
2	2002	346	1001	17-JUL-20	Pret: 2450 lei
3	2003	348	1002	19-JUL-20	Pret: 2200 lei
4	2004	346	1003	20-JUL-20	Pret: 1400 lei, Categoria A1
5	2020	300	1004	28-SEP-20	Pret 2200 lei

```sql
create table plata(
id_plata number(5) constraint plata_pk primary key,
id_contract number(5) constraint plata_contract_nn not null,
data date,
suma number(10) constraint suma_nn not null,
foreign key (id_contract) references CONTRACT(id_contract)
);

create sequence plati
start with 2500
increment by 1;

insert into plata
values (plati.nextval,2001,to_date('17/03/2020','DD/MM/YYYY'),750);
insert into plata
values (plati.nextval,2002,to_date('18/08/2020','DD/MM/YYYY'),500);
insert into plata
values (plati.nextval,2003,to_date('19/06/2020','DD/MM/YYYY'),1000);
insert into plata
values (plati.nextval,2003,to_date('27/06/2020','DD/MM/YYYY'),1000);
insert into plata
values (plati.nextval,2003,to_date('05/08/2020','DD/MM/YYYY'),200);

select *
from plata;
```

Script Output | Query Result

SQL | All Rows Fetched: 5 in 0.007 seconds

	ID_PLATA	ID_CONTRACT	DATA	SUMA
1	2500	2001	17-MAR-20	750
2	2501	2002	18-AUG-20	500
3	2502	2003	19-JUN-20	1000
4	2503	2003	27-JUN-20	1000
5	2504	2003	05-AUG-20	200

```sql
create table LECTIE_TEORETICA(
id_lectietr number(5) constraint lectietr_pk primary key,
id_profesor number(5) constraint teor_prof_nn not null,
id_sediu number(5) constraint teor_sediu_nn not null,
data date constraint teor_data_nn not null,
detalii_suplimentare varchar2(150),
foreign key (id_profesor) references PROF_LEGIS(id_angajat),
foreign key (id_sediu) references SEDIU(id_sediu)
);

create sequence teoretice
start with 3000
increment by 1;

insert into lectie_teoretica
values (teoretice.nextval,342,500,to_date('25/03/2021','DD/MM/YYYY'),'Chestionare');
insert into lectie_teoretica
values (teoretice.nextval,320,501,to_date('16/04/2021','DD/MM/YYYY'),'Intrebari indicatoare');
insert into lectie_teoretica
values (teoretice.nextval,320,502,to_date('23/02/2021','DD/MM/YYYY'),'Intrebari semnale');
insert into lectie_teoretica
values (teoretice.nextval,340,501,to_date('15/01/2021','DD/MM/YYYY'),'Intrebari mecanica');
insert into lectie_teoretica
values (teoretice.nextval,341,504,to_date('10/02/2021','DD/MM/YYYY'),'Chestionare');

select *
from lectie_teoretica;
```

Script Output | Query Result

SQL | All Rows Fetched: 5 in 0.008 seconds

	ID_LECTIETR	ID_PROFESOR	ID_SEDIU	DATA	DETALII_SUPLIMENTARE
1	3000	342	500	25-MAR-21	Chestionare
2	3001	320	501	16-APR-21	Intrebari indicatoare
3	3002	320	502	23-FEB-21	Intrebari semnale
4	3003	340	501	15-JAN-21	Intrebari mecanica
5	3004	341	504	10-FEB-21	Chestionare

```sql
create table PREZENTA(
id_lectie number(5) constraint prezenta_lectie_nn not null,
id_elev number(5) constraint prezenta_elev_nn not null,
foreign key (id_lectie) references lectie_teoretica(id_lectietr),
foreign key (id_elev) references client(id_client)
);

insert into prezenta
values (3000,1002);
insert into prezenta
values (3000,1003);
insert into prezenta
values (3002,1002);
insert into prezenta
values (3003,1002);
insert into prezenta
values (3003,1003);
insert into prezenta
values (3001,1000);
insert into prezenta
values (3004,1001);
insert into prezenta
values (3004,1003);
insert into prezenta
values (3003,1001);
insert into prezenta
values (3002,1000);

select *
from prezenta;
```

Script Output x | Query Result x

SQL | All Rows Fetched: 10 in 0.008 seconds

	ID_LECTIE	ID_ELEV
1	3000	1002
2	3000	1003
3	3003	1002
4	3003	1003
5	3001	1000
6	3004	1001
7	3004	1003
8	3003	1001
9	3002	1000
10	3002	1002

```
constraint CHK_CAL CHECK (lower(calificativ) in ('admis','respins'))
);

create sequence examene
start with 3500
increment by 1;

insert into examen
values (examene.nextval,1000,to_date('27/11/2019','DD/MM/YYYY'),'Admis');
insert into examen
values (examene.nextval,1000,to_date('13/01/2020','DD/MM/YYYY'),'Admis');
insert into examen
values (examene.nextval,1001,to_date('13/05/2020','DD/MM/YYYY'),'Respins');
insert into examen
values (examene.nextval,1001,to_date('25/07/2020','DD/MM/YYYY'),'Respins');
insert into examen
values (examene.nextval,1001,to_date('27/08/2020','DD/MM/YYYY'),'Admis');
insert into examen
values (examene.nextval,1002,to_date('14/05/2020','DD/MM/YYYY'),'Respins');
insert into examen
values (examene.nextval,1002,to_date('27/05/2020','DD/MM/YYYY'),'Respins');
insert into examen
values (examene.nextval,1003,to_date('10/07/2020','DD/MM/YYYY'),'Admis');
insert into examen
values (examene.nextval,1003,to_date('11/07/2020','DD/MM/YYYY'),'Respins');
insert into examen
values (examene.nextval,1003,to_date('23/09/2020','DD/MM/YYYY'),'Admis');

select *
from examen;
```

Script Output x | Query Result x

SQL | All Rows Fetched: 10 in 0.009 seconds

	ID_EXAMEN	ID_ELEV	DATA	CALIFICATIV
1	3500	1000	27-NOV-19	Admis
2	3501	1000	13-JAN-20	Admis
3	3502	1001	13-MAY-20	Respins
4	3503	1001	25-JUL-20	Respins
5	3504	1001	27-AUG-20	Admis
6	3505	1002	14-MAY-20	Respins
7	3506	1002	27-MAY-20	Respins
8	3507	1003	10-JUL-20	Admis
9	3508	1003	11-JUL-20	Respins
10	3509	1003	23-SEP-20	Admis

```sql
create table TEORETIC(
id_examen number(5) constraint examen_teoretic_pk primary key,
punctaj number(2) constraint teoretic_punct_nn not null,
foreign key (id_examen) references examen(id_examen)
);

insert into teoretic
values (3500,23);
insert into teoretic
values (3502,19);
insert into teoretic
values (3503,20);
insert into teoretic
values (3504,22);
insert into teoretic
values (3505,16);

select *
from teoretic;
```

Script Output x | Query Result x

SQL | All Rows Fetched: 5 in 0.008 seconds

	ID_EXAMEN	PUNCTAJ
1	3500	23
2	3502	19
3	3503	20
4	3504	22
5	3505	16

```sql
create table PRACTIC(
id_examen number(5) constraint examen_practic_pk primary key,
puncte_penalizare number(3) constraint pct_nn not null,
foreign key (id_examen) references examen(id_examen)
);

insert into practic
values (3501,5);
insert into practic
values (3506,36);
insert into practic
values (3507,19);
insert into practic
values (3508,102);
insert into practic
values (3509,0);

select *
from practic;
```

Script Output x | Query Result x

SQL | All Rows Fetched: 5 in 0.008 seconds

	ID_EXAMEN	PUNCTE_PENALIZARE
1	3501	5
2	3506	36
3	3507	19
4	3508	102
5	3509	0

Exercitiul 6

```
-------------------------------------------------------------------------------
-- 6. Dorim afisarea numarului de angajati nascuti dupa anul 1999 precum si --
-- o lista cu numarul de angajati nascuti in fiecare zi a luniilor          --
-------------------------------------------------------------------------------
create or replace function ex62
                return number is
   type tind is table of client%rowtype index by binary_integer;
   v_tablou_indexat tind;
   type timbr is table of number;
   v_tablou_imbricat timbr := timbr();
   v_nr number(4);
begin
   select *
   bulk collect into v_tablou_indexat
   from client
   where extract(year from data_nasterii) > 1999;

   for i in 1..31 loop
      v_nr := 0;
      v_tablou_imbricat.extend;
      for j in 1..v_tablou_indexat.count loop
         if (extract(day from v_tablou_indexat(j).data_nasterii) = i)
         then v_nr := v_nr+1;
         end if;
      end loop;
      v_tablou_imbricat(i) := v_nr;
      if (v_nr != 0)
```

```
        then dbms_output.put_line('Ziua: ' || i || '; Nr. angajati: ' || v_nr);
        end if;
    end loop;
    return v_tablou_indexat.count;
end ex62;

begin
    dbms_output.put_line('Sunt ' || ex62 || ' angajati nascuti dupa 2000');
end;
```

```
-- 6. Dorim afisarea numarului de angajati nascuti dupa anul 1999 precum si --
-- o lista cu numarul de angajati nascuti in fiecare zi a luniilor          --
-------------------------------------------------------------------------------
create or replace function ex62
                  return number is
    type tind is table of client%rowtype index by binary_integer;
    v_tablou_indexat tind;
    type timbr is table of number;
    v_tablou_imbricat timbr := timbr();
    v_nr number(4);
begin
    select *
    bulk collect into v_tablou_indexat
    from client
    where extract(year from data_nasterii) > 1999;

    for i in 1..31 loop
        v_nr := 0;
        v_tablou_imbricat.extend;
        for j in 1..v_tablou_indexat.count loop
            if (extract(day from v_tablou_indexat(j).data_nasterii) = i)
            then v_nr := v_nr+1;
            end if;
        end loop;
        v_tablou_imbricat(i) := v_nr;
        if (v_nr != 0)
        then dbms_output.put_line('Ziua: ' || i || '; Nr. angajati: ' || v_nr);
        end if;
    end loop;
    return v_tablou_indexat.count;
end ex62;

begin
    dbms_output.put_line('Sunt ' || ex62 || ' angajati nascuti dupa 2000');
end;
```

Script Output

Task completed in 0.065 seconds

```
Ziua: 6; Nr. angajati: 1
Ziua: 25; Nr. angajati: 1
Sunt 2 angajati nascuti dupa 2000


PL/SQL procedure successfully completed.
```

Exercitiul 7

```
-------------------------------------------------------------------------------
-- 7. Sa se scrie o procedura ce va afisa, pe rand numele tuturor elevilor  --
-- precum si numarul lor de prezente la orele teoretice                     --
-------------------------------------------------------------------------------
create or replace procedure ex7
as
   cursor c is
      select nume, prenume, id_client
      from client;
   v_nume client.nume%type;
   v_prenume client.prenume%type;
   v_id client.id_client%type;
   v_nr number(4);
begin
   open c;
   loop
      fetch c into v_nume,v_prenume,v_id;
      exit when c%notfound;
      select count(*) into v_nr
      from prezenta
      where id_elev = v_id;
      dbms_output.put_line('Elevul cu numele ' || v_nume || ' ' || v_prenume || ' are ' || v_nr || '
prezente.');
   end loop;
end ex7;


begin
```

```
    ex7;
end;
```

```
-------------------------------------------------------------------------------
-- 7. Sa se scrie o procedura ce va afisa, pe rand numele tuturor elevilor  --
-- precum si numarul lor de prezente la orele teoretice                     --
-------------------------------------------------------------------------------
create or replace procedure ex7
as
    cursor c is
        select nume, prenume, id_client
        from client;
    v_nume client.nume%type;
    v_prenume client.prenume%type;
    v_id client.id_client%type;
    v_nr number(4);
begin
    open c;
    loop
        fetch c into v_nume,v_prenume,v_id;
        exit when c%notfound;
        select count(*) into v_nr
        from prezenta
        where id_elev = v_id;
        dbms_output.put_line('Elevul cu numele ' || v_nume || ' ' || v_prenume || ' are ' || v_nr || ' prezente.');
    end loop;
end ex7;

begin
    ex7;
end;
```

Script Output

Task completed in 0.067 seconds

```
Elevul cu numele Anuta Stoica are 2 prezente.
Elevul cu numele Visaron Ionescu are 2 prezente.
Elevul cu numele Lavinia Farcas are 3 prezente.
Elevul cu numele Calin Catana are 3 prezente.
Elevul cu numele Isabela Pana are 0 prezente.


PL/SQL procedure successfully completed.
```

Exercitiul 8

```
-------------------------------------------------------------------------------
-- 8. Sa se afiseze numele profesorului de legislatie ce a predat lectii    --
-- teoretice unui elev al carui ID este primit                              --
-------------------------------------------------------------------------------
create or replace function ex8 (v_elev client.id_client%type)
                return angajat.nume%type as

   v_nume angajat.nume%type;
begin

   select nume into v_nume
   from angajat
   where id_angajat in ( select id_profesor
                    from lectie_teoretica
                    where id_lectietr in ( select id_lectie
                                   from prezenta
                                   where id_elev = v_elev ));
   return v_nume;
   exception
      when no_data_found then
               raise_application_error(-20000, 'Nu exista un astfel de profesor');
      when too_many_rows then
               raise_application_error(-20001, 'Exista prea multi profesori de legislatie care
indeplinesc aceste conditii');
      when others then
               raise_application_error(-20002, 'Alta eroare');
```

```
end ex8;

begin
   dbms_output.put_line('Numele profesorului este: ' || ex8(1005)); -- No data found
end;

begin
   dbms_output.put_line('Numele profesorului este: ' || ex8(1002)); -- Too many rows
end;

insert into prezenta values(3002,1004); -- Ca sa putem vedea un caz in care returneaza ceva

begin
   dbms_output.put_line('Numele profesorului este: ' || ex8(1004)); -- Numele profesorului este:
Nelu
end;

delete from prezenta where id_lectie = 3002 and id_elev = 1004;
```

```
    from angajat
    where id_angajat in ( select id_profesor
                          from lectie_teoretica
                          where id_lectietr in ( select id_lectie
                                                 from prezenta
                                                 where id_elev = v_elev ));
    return v_nume;
    exception
        when no_data_found then
                    raise_application_error(-20000, 'Nu exista un astfel de profesor');
        when too_many_rows then
                    raise_application_error(-20001, 'Exista prea multi profesori de legislatie care indeplinesc aceste conditii');
        when others then
                    raise_application_error(-20002, 'Alta eroare');

end ex8;

begin
    dbms_output.put_line('Numele profesorului este: ' || ex8(1005)); -- No data found
end;

begin
    dbms_output.put_line('Numele profesorului este: ' || ex8(1002)); -- Too many rows
end;

insert into prezenta values(3002,1004); -- Ca sa putem vedea un caz in care returneaza ceva

begin
    dbms_output.put_line('Numele profesorului este: ' || ex8(1004)); -- Numele profesorului este: Nelu
end;

delete from prezenta where id_lectie = 3002 and id_elev = 1004;
-------------------------------------------------------------------------
-- 9. Sa se obtina codul postal al sediului la care lucreaza un secretar    --
-- ce a realizat un contract cu un elev care a fost instruit din punct de   --
-- vedere al pregatirii practice de un instructor al carui ID este primit.  --                                        --
```

Script Output

Task completed in 0.047 seconds

```
1 row inserted.

Numele profesorului este: Nelu


PL/SQL procedure successfully completed.
```

```
                                                where id_elev = v_elev ));
    return v_nume;
    exception
        when no_data_found then
                    raise_application_error(-20000, 'Nu exista un astfel de profesor');
        when too_many_rows then
                    raise_application_error(-20001, 'Exista prea multi profesori de legislatie care indeplinesc aceste conditii');
        when others then
                    raise_application_error(-20002, 'Alta eroare');

end ex8;

begin
    dbms_output.put_line('Numele profesorului este: ' || ex8(1005)); -- No data found
end;

begin
    dbms_output.put_line('Numele profesorului este: ' || ex8(1002)); -- Too many rows
end;

insert into prezenta values(3002,1004); -- Ca sa putem vedea un caz in care returneaza ceva

begin
    dbms_output.put_line('Numele profesorului este: ' || ex8(1004)); -- Numele profesorului este: Nelu
end;

delete from prezenta where id_lectie = 3002 and id_elev = 1004;
--------------------------------------------------------------------------------
```

Script Output

Task completed in 0.117 seconds

```
Error starting at line : 579 in command -
begin
    dbms_output.put_line('Numele profesorului este: ' || ex8(1005)); -- No data found
end;
Error report -
ORA-20000: Nu exista un astfel de profesor
ORA-06512: at "C##SOME_USERNAME.EX8", line 17
ORA-06512: at line 2
20000. 00000 -  "%s"
*Cause:    The stored procedure 'raise_application_error'
           was called which causes this error to be generated.
*Action:   Correct the problem as described in the error message or contact
           the application administrator or DBA for more information.
```

```
    select nume into v_nume
    from angajat
    where id_angajat in ( select id_profesor
                          from lectie_teoretica
                          where id_lectietr in ( select id_lectie
                                                 from prezenta
                                                 where id_elev = v_elev ));
    return v_nume;
    exception
        when no_data_found then
                    raise_application_error(-20000, 'Nu exista un astfel de profesor');
        when too_many_rows then
                    raise_application_error(-20001, 'Exista prea multi profesori de legislatie care indeplinesc aceste conditii');
        when others then
                    raise_application_error(-20002, 'Alta eroare');

end ex8;

begin
    dbms_output.put_line('Numele profesorului este: ' || ex8(1005)); -- No data found
end;

begin
    dbms_output.put_line('Numele profesorului este: ' || ex8(1002)); -- Too many rows
end;

insert into prezenta values(3002,1004); -- Ca sa putem vedea un caz in care returneaza ceva

begin
    dbms_output.put_line('Numele profesorului este: ' || ex8(1004)); -- Numele profesorului este: Nelu
end;

delete from prezenta where id_lectie = 3002 and id_elev = 1004;
--------------------------------------------------------------------------
```

Script Output

Task completed in 0.084 seconds

```
Error starting at line : 583 in command -
begin
    dbms_output.put_line('Numele profesorului este: ' || ex8(1002)); -- Too many rows
end;
Error report -
ORA-20001: Exista prea multi profesori de legislatie care indeplinesc aceste conditii
ORA-06512: at "C##SOME_USERNAME.EX8", line 19
ORA-06512: at line 2
```

Exercitiul 9

```
-------------------------------------------------------------------------------
-- 9. Sa se obtina codul postal al sediului la care lucreaza un secretar    --
-- ce a realizat un contract cu un elev care a fost instruit din punct de   --
-- vedere al pregatirii practice de un instructor al carui ID este primit.  --
--
-------------------------------------------------------------------------------
create or replace procedure ex9 (v_id_angajat in angajat.id_angajat%type,
                                v_postal out adresa.cod_postal%type)
is
begin
        select cod_postal into v_postal
        from adresa
        where id_adresa in ( select id_adresa
                             from sediu
                             where id_sediu in ( select id_sediu
                                                 from secretar
                                                 where id_angajat in ( select id_secretar
                                                                       from contract
                                                                       where id_client in ( select id_elev
                                                                                            from lectie_practica
                                                                                            where id_instructor = v_id_angajat))));
       exception
        when no_data_found then
                raise_application_error(-20003, 'Nu exista un astfel de sediu');
        when too_many_rows then
                raise_application_error(-20004, 'Exista prea multe sedii care indeplinesc aceste
conditii');
```

```
        when others then
                raise_application_error(-20005, 'Alta eroare');
end ex9;

declare
   v_cod_postal adresa.cod_postal%type;
begin
   ex9(301,v_cod_postal);  -- Va furniza un cod postal
   dbms_output.put_line('');
   dbms_output.put_line('Codul postal este: ' || v_cod_postal);
end;

declare
   v_cod_postal adresa.cod_postal%type;
begin
   ex9(1,v_cod_postal);  -- No data found
   dbms_output.put_line('Codul postal este: ' || v_cod_postal);
end;

declare
   v_cod_postal adresa.cod_postal%type;
begin
   ex9(303,v_cod_postal);  -- Too many rows
   dbms_output.put_line('Codul postal este: ' || v_cod_postal);
end;
```

```
        when too_many_rows then
                raise_application_error(-20004, 'Exista prea multe sedii care indeplinesc aceste conditii');
        when others then
                raise_application_error(-20005, 'Alta eroare');
end ex9;

declare
    v_cod_postal adresa.cod_postal%type;
begin
    ex9(301,v_cod_postal);  -- Va furniza un cod postal
    dbms_output.put_line('');
    dbms_output.put_line('Codul postal este: ' || v_cod_postal);
end;

declare
    v_cod_postal adresa.cod_postal%type;
begin
    ex9(1,v_cod_postal);  -- No data found
    dbms_output.put_line('Codul postal este: ' || v_cod_postal);
end;

declare
    v_cod_postal adresa.cod_postal%type;
begin
    ex9(303,v_cod_postal);  -- Too many rows
    dbms_output.put_line('Codul postal este: ' || v_cod_postal);
end;
```

Script Output

Task completed in 0.067 seconds

```
Codul postal este: 732233


PL/SQL procedure successfully completed.
```

```
        when no_data_found then
                raise_application_error(-20003, 'Nu exista un astfel de sediu');
        when too_many_rows then
                raise_application_error(-20004, 'Exista prea multe sedii care indeplinesc aceste conditii');
        when others then
                raise_application_error(-20005, 'Alta eroare');
end ex9;

declare
    v_cod_postal adresa.cod_postal%type;
begin
    ex9(301,v_cod_postal);  -- Va furniza un cod postal
    dbms_output.put_line('');
    dbms_output.put_line('Codul postal este: ' || v_cod_postal);
end;

declare
    v_cod_postal adresa.cod_postal%type;
begin
    ex9(1,v_cod_postal);  -- No data found
    dbms_output.put_line('Codul postal este: ' || v_cod_postal);
end;

declare
    v_cod_postal adresa.cod_postal%type;
begin
    ex9(303,v_cod_postal);  -- Too many rows
    dbms_output.put_line('Codul postal este: ' || v_cod_postal);
end;
--------------------------------------------------------------------------------
```

Script Output

Task completed in 0.188 seconds

```
Error starting at line : 631 in command -
declare
    v_cod_postal adresa.cod_postal%type;
begin
    ex9(1,v_cod_postal);  -- No data found
    dbms_output.put_line('Codul postal este: ' || v_cod_postal);
end;
Error report -
ORA-20003: Nu exista un astfel de sediu
ORA-06512: at "C##SOME_USERNAME.EX9", line 18
ORA-06512: at line 4
```

```
        when no_data_found then
                    raise_application_error(-20003, 'Nu exista un astfel de sediu');
        when too_many_rows then
                    raise_application_error(-20004, 'Exista prea multe sedii care indeplinesc aceste conditii');
        when others then
                    raise_application_error(-20005, 'Alta eroare');
end ex9;

declare
    v_cod_postal adresa.cod_postal%type;
begin
    ex9(301,v_cod_postal);  -- Va furniza un cod postal
    dbms_output.put_line('');
    dbms_output.put_line('Codul postal este: ' || v_cod_postal);
end;

declare
    v_cod_postal adresa.cod_postal%type;
begin
    ex9(1,v_cod_postal);  -- No data found
    dbms_output.put_line('Codul postal este: ' || v_cod_postal);
end;

declare
    v_cod_postal adresa.cod_postal%type;
begin
    ex9(303,v_cod_postal);  -- Too many rows
    dbms_output.put_line('Codul postal este: ' || v_cod_postal);
end;
```

Script Output

Task completed in 0.042 seconds

```
Error starting at line : 638 in command -
declare
    v_cod_postal adresa.cod_postal%type;
begin
    ex9(303,v_cod_postal);  -- Too many rows
    dbms_output.put_line('Codul postal este: ' || v_cod_postal);
end;
Error report -
ORA-20004: Exista prea multe sedii care indeplinesc aceste conditii
ORA-06512: at "C##SOME_USERNAME.EX9", line 20
ORA-06512: at line 4
```

Exercitiul 10

```
-------------------------------------------------------------------------------
-- 10. Realizati un trigger ce nu va permite accesul la tabela prezenta daca--
-- userul curent nu este 'administrator' decat de luni pana vineri, intre   --
-- orele 8 - 16                                                             --
-------------------------------------------------------------------------------
create or replace trigger ex10
   before insert or update or delete on prezenta
begin
   if (user != 'administrator')
      and ((to_char(sysdate,'D') = 1) or (to_char(sysdate,'D') = 7) or (to_char(sysdate,'HH24') not
between 8 and 16))
   then raise_application_error(-20006,'Userul curent nu are dreptul la modificari in acest
moment');
   end if;
end;


insert into prezenta values (3003,1004); -- Nu va functiona pt toti useri decat de luni pana vineri,
                                         -- intre orele 08:00 si 16:00


delete from prezenta where id_elev = 1004 and id_lectie = 3003;
```

```
-------------------------------------------------------------------------
-- 10. Realizati un trigger ce nu va permite accesul la tabela prezenta daca--
-- userul curent nu este 'administrator' decat de luni pana vineri, intre   --
-- orele 8 - 16                                                            --
-------------------------------------------------------------------------
create or replace trigger ex10
    before insert or update or delete on prezenta
begin
    if (user != 'administrator')
        and ((to_char(sysdate,'D') = 1) or (to_char(sysdate,'D') = 7) or (to_char(sysdate,'HH24') not between 8 and 16))
    then raise_application_error(-20006,'Userul curent nu are dreptul la modificari in acest moment');
    end if;
end;

insert into prezenta values (3003,1004); -- Nu va functiona pt toti useri decat de luni pana vineri,
                                         -- intre orele 08:00 si 16:00

delete from prezenta where id_elev = 1004 and id_lectie = 3003;
```

Script Output x | Query Result x

Task completed in 0.059 seconds

```
Error starting at line : 658 in command -
insert into prezenta values (3003,1004)
Error report -
ORA-20006: Userul curent nu are dreptul la modificari in acest moment
ORA-06512: at "C##SOME_USERNAME.EX10", line 4
ORA-04088: error during execution of trigger 'C##SOME_USERNAME.EX10'
```

Exercitiul 11

```
-------------------------------------------------------------------------------
-- 11. Sa se realizeze un declansator ce nu permite cresterea platiilor     --
-- de peste 800 de lei sau scaderea celor de sub 400 de lei                 --
-------------------------------------------------------------------------------
create or replace trigger ex11
   before update of suma on plata
   for each row
begin
   if (:OLD.suma < 400 and :NEW.suma < :OLD.suma)
      then raise_application_error(-20007,'Plata realizata este prea mica pentru a fi micsorata');
   elsif (:OLD.suma > 800 and :NEW.suma > :OLD.suma)
      then raise_application_error(-20008,'Plata realizata este prea mare pentru a fi marita');
   end if;
end;

update plata set suma = 100 where suma = 200; -- -20007
update plata set suma = 1300 where suma = 1000; -- -20008
```

```
-- 11. Sa se realizeze un declansator ce nu permite cresterea platiilor     --
-- de peste 800 de lei sau scaderea celor de sub 400 de lei                 --
-------------------------------------------------------------------------------
create or replace trigger ex11
    before update of suma on plata
    for each row
begin
    if (:OLD.suma < 400 and :NEW.suma < :OLD.suma)
        then raise_application_error(-20007,'Plata realizata este prea mica pentru a fi micsorata');
    elsif (:OLD.suma > 800 and :NEW.suma > :OLD.suma)
        then raise_application_error(-20008,'Plata realizata este prea mare pentru a fi marita');
    end if;
end;

update plata set suma = 100 where suma = 200; -- -20007
update plata set suma = 1300 where suma = 1000; -- -20008
-------------------------------------------------------------------------------
-- 12. Sa se realizeze un trigger ce va asigura faptul ca numai administratorul
```

Script Output | Task completed in 0.08 seconds

```
Error starting at line : 678 in command -
update plata set suma = 1300 where suma = 1000
Error report -
ORA-20008: Plata realizata este prea mare pentru a fi marita
ORA-06512: at "C##SOME_USERNAME.EX11", line 5
ORA-04088: error during execution of trigger 'C##SOME_USERNAME.EX11'
```

```
-------------------------------------------------------------------------------
-- 11. Sa se realizeze un declansator ce nu permite cresterea platiilor     --
-- de peste 800 de lei sau scaderea celor de sub 400 de lei                 --
-------------------------------------------------------------------------------
create or replace trigger ex11
    before update of suma on plata
    for each row
begin
    if (:OLD.suma < 400 and :NEW.suma < :OLD.suma)
        then raise_application_error(-20007,'Plata realizata este prea mica pentru a fi micsorata');
    elsif (:OLD.suma > 800 and :NEW.suma > :OLD.suma)
        then raise_application_error(-20008,'Plata realizata este prea mare pentru a fi marita');
    end if;
end;

update plata set suma = 100 where suma = 200; -- -20007
update plata set suma = 1300 where suma = 1000; -- -20008
```

Script Output | Query Result | Task completed in 0.082 seconds

```
Error starting at line : 677 in command -
update plata set suma = 100 where suma = 200
Error report -
ORA-20007: Plata realizata este prea mica pentru a fi micsorata
ORA-06512: at "C##SOME_USERNAME.EX11", line 3
ORA-04088: error during execution of trigger 'C##SOME_USERNAME.EX11'
```

Exercitiul 12

```
-------------------------------------------------------------------------------
-- 12. Sa se realizeze un trigger ce va asigura faptul ca numai administratorul
-- poate crea, sterge sau altera iar de altfel dorim sa tinem o tabela de   --
-- evidenta a actiunilor administratorului in care se afla actiunea efectuata-
-- si data la care a fost realizata                                         --
-------------------------------------------------------------------------------
create table administrator_logs (data DATE,
                                 actiune varchar2(20));

create or replace trigger ex12
   before create or drop or alter on database
begin
   if (user != 'administrator')
      then raise_application_error(-20008,'Nu ai privilegiile necesare efectuarii acestei operatii');
   else insert into administrator_logs values (sysdate,sys.sysevent);
   end if;
end;

select * from administrator_logs;
create table numere (numar number(4)); -- Va da eroare la orice user inafara de administrator
drop table numere;

alter trigger ex12 disable;
alter trigger ex12 enable;
```

```oracle
-------------------------------------------------------------------------
-- 12. Sa se realizeze un trigger ce va asigura faptul ca numai administratorul
-- poate crea, sterge sau altera iar de altfel dorim sa tinem o tabela de   --
-- evidenta a actiunilor administratorului in care se afla actiunea efectuata-
-- si data la care a fost realizata                                         --
-------------------------------------------------------------------------
create table administrator_logs (data DATE,
                                 actiune varchar2(20));

create or replace trigger ex12
    before create or drop or alter on database
begin
    if (user != 'administrator')
        then raise_application_error(-20008,'Nu ai privilegiile necesare efectuarii acestei operatii');
    else insert into administrator_logs values (sysdate,sys.sysevent);
    end if;
end;

select * from administrator_logs;
create table numere (numar number(4)); -- Va da eroare la orice user inafara de administrator
drop table numere;

alter trigger ex12 disable;
alter trigger ex12 enable;
-------------------------------------------------------------------------
```

Script Output x Query Result x

Task completed in 0.097 seconds

```
Error starting at line : 698 in command -
create table numere (numar number(4))
Error report -
ORA-04088: error during execution of trigger 'C##SOME_USERNAME.EX12'
ORA-00604: error occurred at recursive SQL level 1
ORA-20008: Nu ai privilegiile necesare efectuarii acestei operatii
ORA-06512: at line 3
04088. 00000 -  "error during execution of trigger '%s.%s'"
*Cause:    A runtime error occurred during execution of a trigger.
*Action:   Check the triggers which were involved in the operation.
```

Exercitiul 13

```
create or replace package pachet_obiecte is
   function ex62
      return number;
   procedure ex7;
   function ex8 (v_elev client.id_client%type)
      return angajat.nume%type;
   procedure ex9 (v_id_angajat in angajat.id_angajat%type,
                  v_postal out adresa.cod_postal%type);
end;

create or replace package body pachet_obiecte is
   function ex62
      return number is
      type tind is table of client%rowtype index by binary_integer;
      v_tablou_indexat tind;
      type timbr is table of number;
      v_tablou_imbricat timbr := timbr();
      v_nr number(4);
   begin
      select *
      bulk collect into v_tablou_indexat
      from client
      where extract(year from data_nasterii) > 1999;

      for i in 1..31 loop
         v_nr := 0;
         v_tablou_imbricat.extend;
```

```
        for j in 1..v_tablou_indexat.count loop
            if (extract(day from v_tablou_indexat(j).data_nasterii) = i)
            then v_nr := v_nr+1;
            end if;
        end loop;
        v_tablou_imbricat(i) := v_nr;
        if (v_nr != 0)
        then dbms_output.put_line('Ziua: ' || i || '; Nr. angajati: ' || v_nr);
        end if;
    end loop;
    return v_tablou_indexat.count;
end ex62;

procedure ex7 as
    cursor c is
        select nume, prenume, id_client
        from client;
    v_nume client.nume%type;
    v_prenume client.prenume%type;
    v_id client.id_client%type;
    v_nr number(4);
begin
    open c;
    loop
        fetch c into v_nume,v_prenume,v_id;
        exit when c%notfound;
        select count(*) into v_nr
        from prezenta
        where id_elev = v_id;
```

```
        dbms_output.put_line('Elevul cu numele ' || v_nume || ' ' || v_prenume || ' are ' || v_nr || '
prezente.');
      end loop;
   end ex7;

   function ex8 (v_elev client.id_client%type)
              return angajat.nume%type as
             v_nume angajat.nume%type;
   begin

      select nume into v_nume
      from angajat
      where id_angajat in ( select id_profesor
                    from lectie_teoretica
                    where id_lectietr in ( select id_lectie
                                  from prezenta
                                  where id_elev = v_elev ));
      return v_nume;
      exception
         when no_data_found then
                raise_application_error(-20000, 'Nu exista un astfel de profesor');
         when too_many_rows then
                raise_application_error(-20001, 'Exista prea multi profesori de legislatie care
indeplinesc aceste conditii');
         when others then
                raise_application_error(-20002, 'Alta eroare');

   end ex8;

   procedure ex9 (v_id_angajat in angajat.id_angajat%type,
```

```
                    v_postal out adresa.cod_postal%type)
  is
  begin
        select cod_postal into v_postal
        from adresa
        where id_adresa in ( select id_adresa
                    from sediu
                    where id_sediu in ( select id_sediu
                              from secretar
                              where id_angajat in ( select id_secretar
                                        from contract
                                        where id_client in ( select id_elev
                                                  from lectie_practica
                                                  where id_instructor =
v_id_angajat))));
        exception
        when no_data_found then
              raise_application_error(-20003, 'Nu exista un astfel de sediu');
        when too_many_rows then
              raise_application_error(-20004, 'Exista prea multe sedii care indeplinesc aceste
conditii');
        when others then
              raise_application_error(-20005, 'Alta eroare');
  end ex9;
end;
--------------------------------------------------------------------------------
```

```
    end ex8;

    procedure ex9 (v_id_angajat in angajat.id_angajat%type,
                                v_postal out adresa.cod_postal%type)
    is
    begin
            select cod_postal into v_postal
            from adresa
            where id_adresa in ( select id_adresa
                                 from sediu
                                 where id_sediu in ( select id_sediu
                                                     from secretar
                                                     where id_angajat in ( select id_secretar
                                                                           from contract
                                                                           where id_client in ( select id_elev
                                                                                                from lectie_practica
                                                                                                where id_instructor = v_id_angajat))));
           exception
            when no_data_found then
                        raise_application_error(-20003, 'Nu exista un astfel de sediu');
            when too_many_rows then
                        raise_application_error(-20004, 'Exista prea multe sedii care indeplinesc aceste conditii');
            when others then
                        raise_application_error(-20005, 'Alta eroare');
    end ex9;
end;
--------------------------------------------------------------------------------
```

Script Output

Task completed in 0.127 seconds

```
Package PACHET_OBIECTE compiled


Package Body PACHET_OBIECTE compiled
```