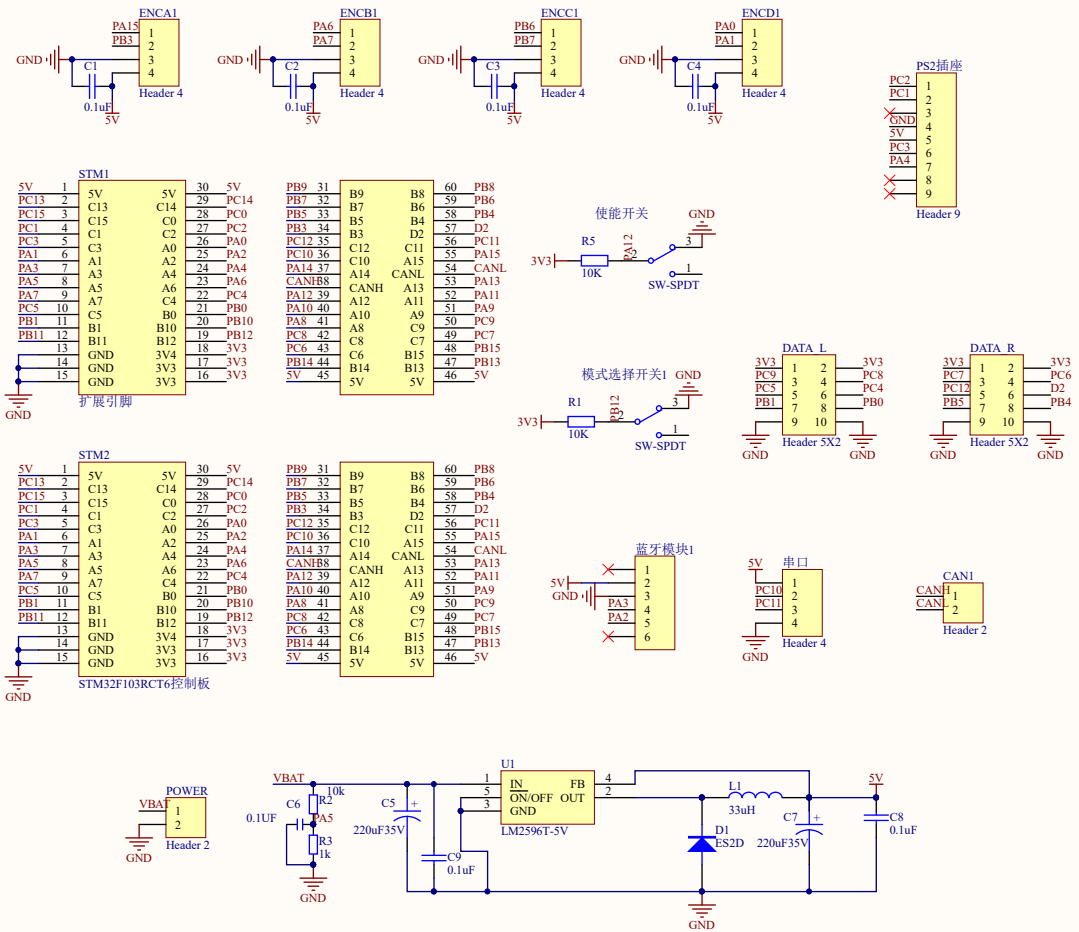
ENCA1
PA15
PB3
Header 4
GND
C1
0.1uF
5V
ENCB1
PA6
PA7
C2
ENCC1
PB6
PB7
C3
ENCD1
PA0
PA1
C4
PS2插座
PC2
PC1
GND
5V
PC3
PA4
Header 9
STM1
扩展引脚
使能开关
R5
3V3
10K
PA12
SW-SPDT
模式选择开关1
R1
PB12
DATA_L
DATA_R
Header 5X2
STM2
STM32F103RCT6控制板
蓝牙模块1
PA3
PA2
串口
PC10
PC11
CAN1
CANH
CANL
Header 2
POWER
VBAT
U1
IN
FB
ON/OFF
OUT
LM2596T-5V
R2
10k
R3
1k
C6
PA5
C5
220uF35V
C9
L1
33uH
D1
ES2D
C7
C8