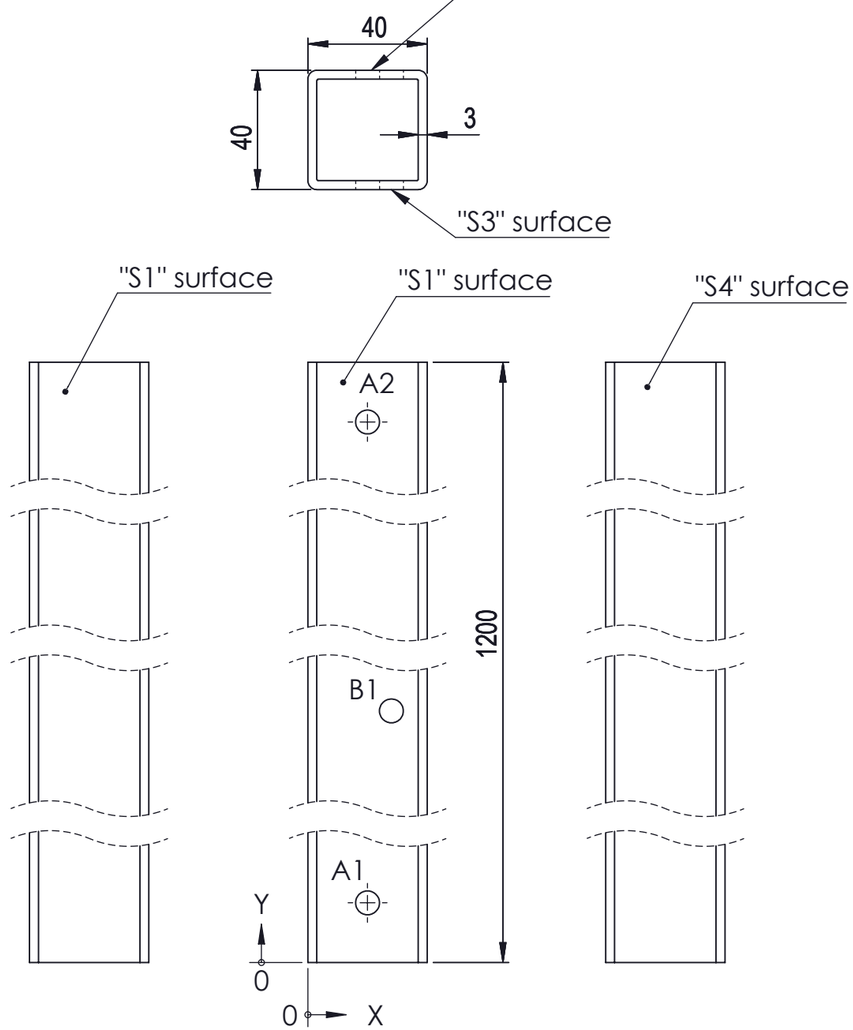

TAG	X LOC	Y LOC	SIZE
A1	20	20	Ø 8 THRU ALL
A2	20	1180	Ø 8 THRU ALL
B1	28	125	Ø 8 THRU

UNLESS OTHERWISE SPECIFIED:
DIMENSIONS ARE IN MILLIMETERS
SURFACE FINISH:
TOLERANCES:
LINEAR:
ANGULAR:

FINISH:

DEBURR AND BREAK SHARP EDGES

DO NOT SCALE DRAWING

REVISION

	NAME	SIGNATURE	DATE
DRAWN			
CHK'D			
APPV'D			
MFG			
Q.A			

MATERIAL:

WEIGHT:

DWG NO. Beam Y

TITLE: SHS 40x40x3x1200

A4

SCALE:1:20

SHEET 1 OF 1

www.irnas.eu