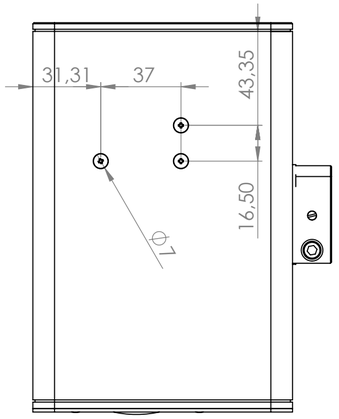


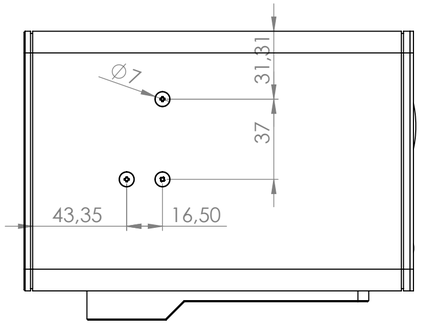


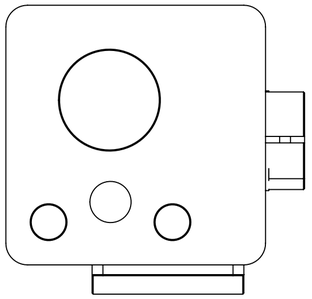

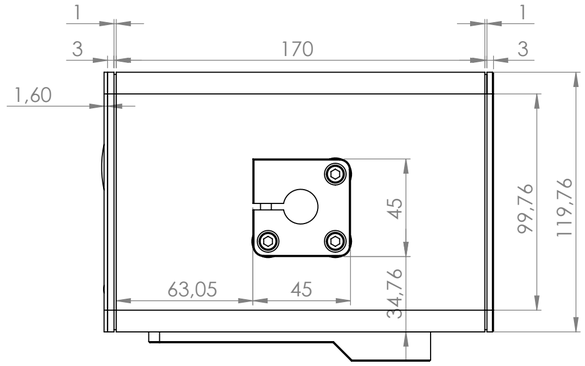


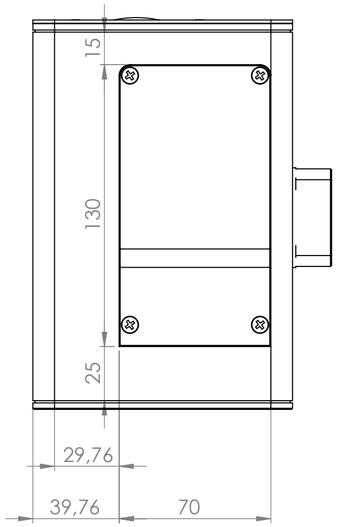


| | | | | | |
|---|---|---|---|---|---|
| UNLESS OTHERWISE SPECIFIED:<br>DIMENSIONS ARE IN MILLIMETERS<br>SURFACE FINISH:<br>TOLERANCES:<br>LINEAR:<br>ANGULAR: | FINISH: | DEBURR AND BREAK SHARP EDGES | DO NOT SCALE DRAWING | REVISION | |
| | NAME | SIGNATURE | DATE | TITLE: | |
| DRAWN | | | | | |
| CHK'D | | | | | |
| APPV'D | | | | | |
| MFG | | | | | |
| Q.A | | | MATERIAL: | DWG NO. koruza 2.4.2.1 | A2 |
| | | | WEIGHT: | SCALE:1:2 | SHEET 1 OF 1 |