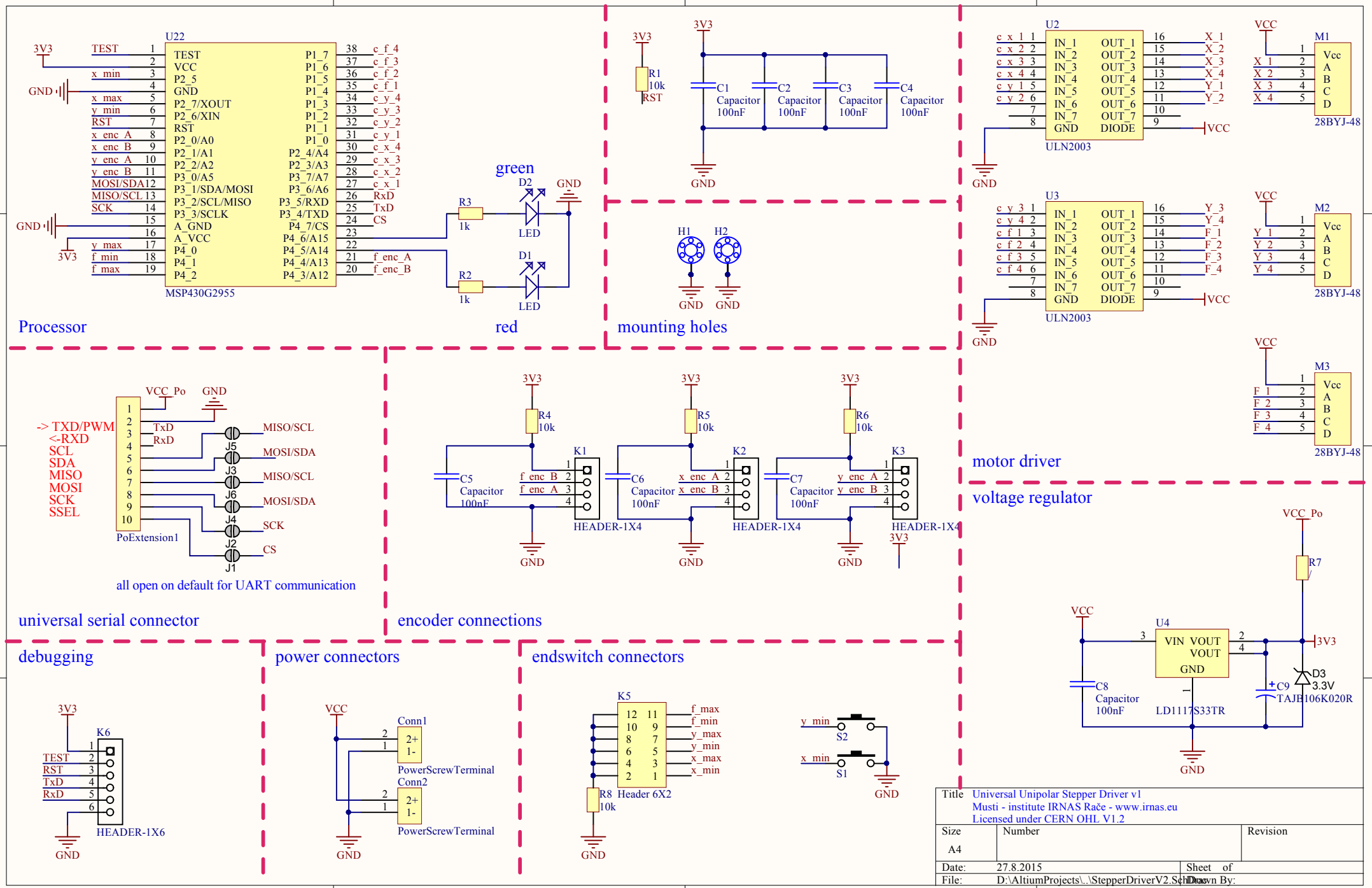
U22
MSP430G2955
TEST
VCC
P2_5
GND
P2_7/XOUT
P2_6/XIN
RST
P2_0/A0
P2_1/A1
P2_2/A2
P3_0/A5
P3_1/SDA/MOSI
P3_2/SCL/MISO
P3_3/SCLK
A_GND
A_VCC
P4_0
P4_1
P4_2
P1_7
P1_6
P1_5
P1_4
P1_3
P1_2
P1_1
P1_0
P2_4/A4
P2_3/A3
P3_7/A7
P3_6/A6
P3_5/RXD
P3_4/TXD
P4_7/CS
P4_6/A15
P4_5/A14
P4_4/A13
P4_3/A12
x_min
x_max
y_min
RST
x_enc_A
x_enc_B
y_enc_A
y_enc_B
MOSI/SDA
MISO/SCL
SCK
y_max
f_min
f_max
c_f_4
c_f_3
c_f_2
c_f_1
c_y_4
c_y_3
c_y_2
c_y_1
c_x_4
c_x_3
c_x_2
c_x_1
RxD
TxD
CS
f_enc_A
f_enc_B
3V3
GND
R3
1k
R2
1k
D2
D1
LED
green
red
Processor
R1
10k
RST
C1
C2
C3
C4
Capacitor
100nF
H1
H2
mounting holes
U2
U3
IN_1
IN_2
IN_3
IN_4
IN_5
IN_6
IN_7
GND
OUT_1
OUT_2
OUT_3
OUT_4
OUT_5
OUT_6
OUT_7
DIODE
ULN2003
X_1
X_2
X_3
X_4
Y_1
Y_2
Y_3
Y_4
F_1
F_2
F_3
F_4
VCC
M1
M2
M3
Vcc
A
B
C
D
28BYJ-48
motor driver
VCC_Po
-> TXD/PWM
<-RXD
SCL
SDA
MISO
MOSI
SCK
SSEL
TxD
RxD
J5
J3
J6
J4
J2
J1
MISO/SCL
MOSI/SDA
SCK
CS
PoExtension1
all open on default for UART communication
universal serial connector
R4
10k
R5
10k
R6
10k
K1
K2
K3
C5
C6
C7
f_enc_B
f_enc_A
x_enc_A
x_enc_B
y_enc_A
y_enc_B
HEADER-1X4
encoder connections
R7
U4
VIN
VOUT
C8
Capacitor
100nF
LD1117S33TR
C9
TAJB106K020R
D3
3.3V
voltage regulator
K6
TEST
RST
TxD
RxD
HEADER-1X6
debugging
Conn1
Conn2
PowerScrewTerminal
power connectors
K5
Header 6X2
R8
10k
y_min
x_min
S2
S1
endswitch connectors
Title
Universal Unipolar Stepper Driver v1
Musti - institute IRNAS Rače - www.irnas.eu
Licensed under CERN OHL V1.2
Size
A4
Number
Revision
Date:
27.8.2015
Sheet of
File:
D:\AltiumProjects\..\StepperDriverV2.SchDoc
Drawn By:

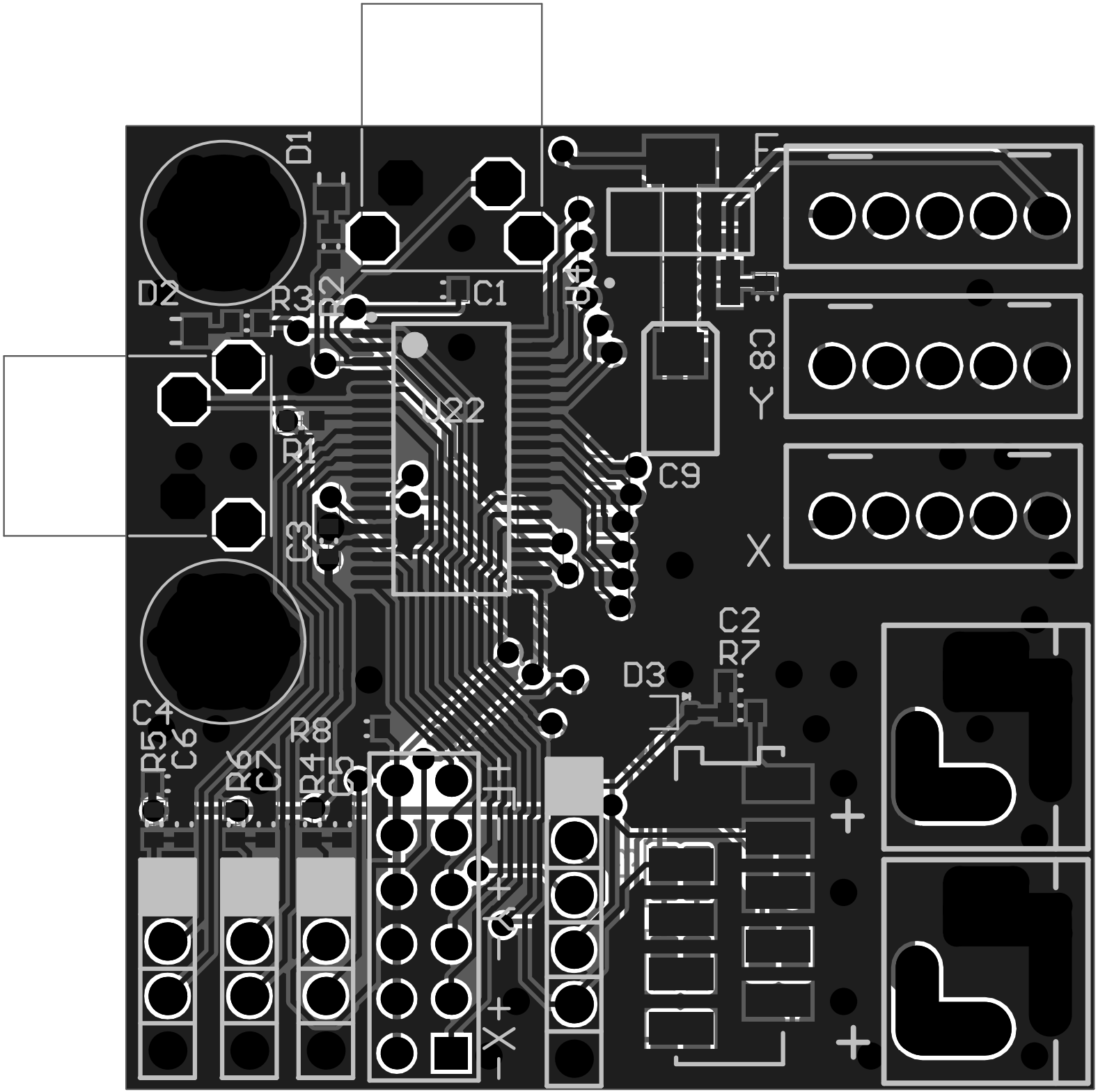
D1
D2
R3
C1
U22
C8
Y
C9
X
C2
R7
D3
C4
R5
C6
R8
R6
C7
R4
C5
+
-
X+
X-