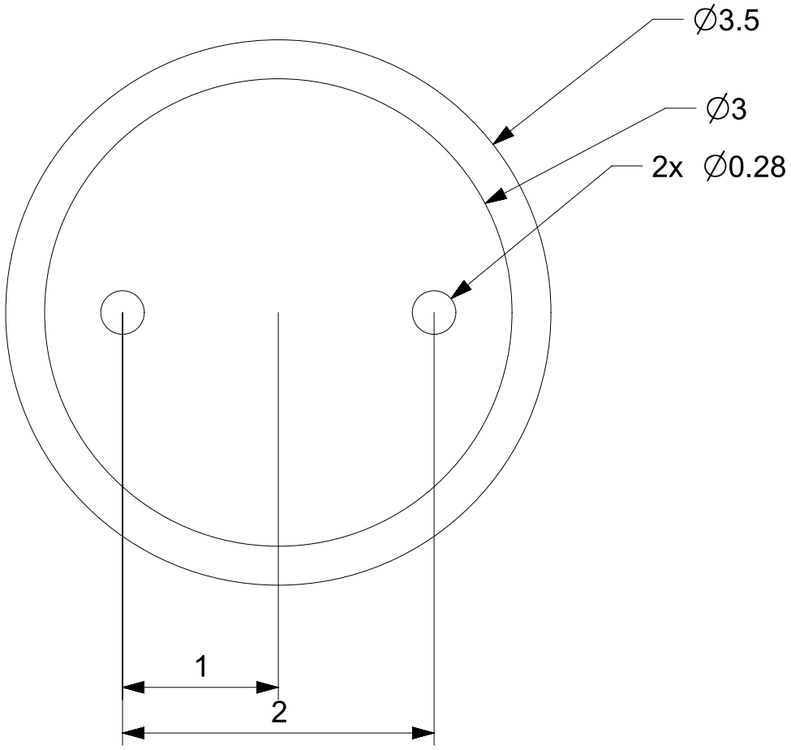

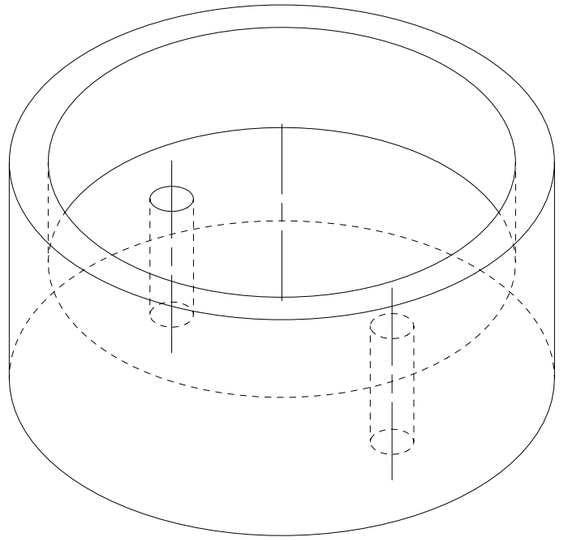

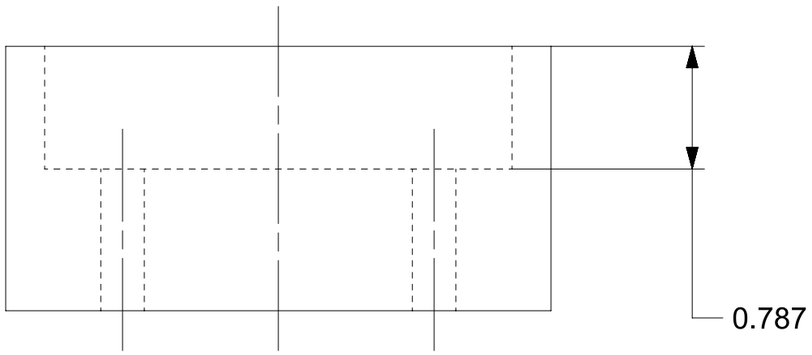

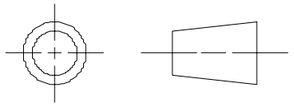

ALL DIMENSIONS IN MM

SIEMENS		THIS DRAWING HAS BEEN PRODUCED USING AN EXAMPLE TEMPLATE PROVIDED BY SIEMENS PLM SOFTWARE		
FIRST ISSUED		TITLE		
DRAWN BY				
CHECKED BY				
APPROVED BY		SIZE	DRG NO.	SHEET REV
		A3	blckbox_bottom_plate	A
		SCALE 1:1		SHEET 1 OF 1
				A3