REV	DATE	QUANTITY
0	01/26	2

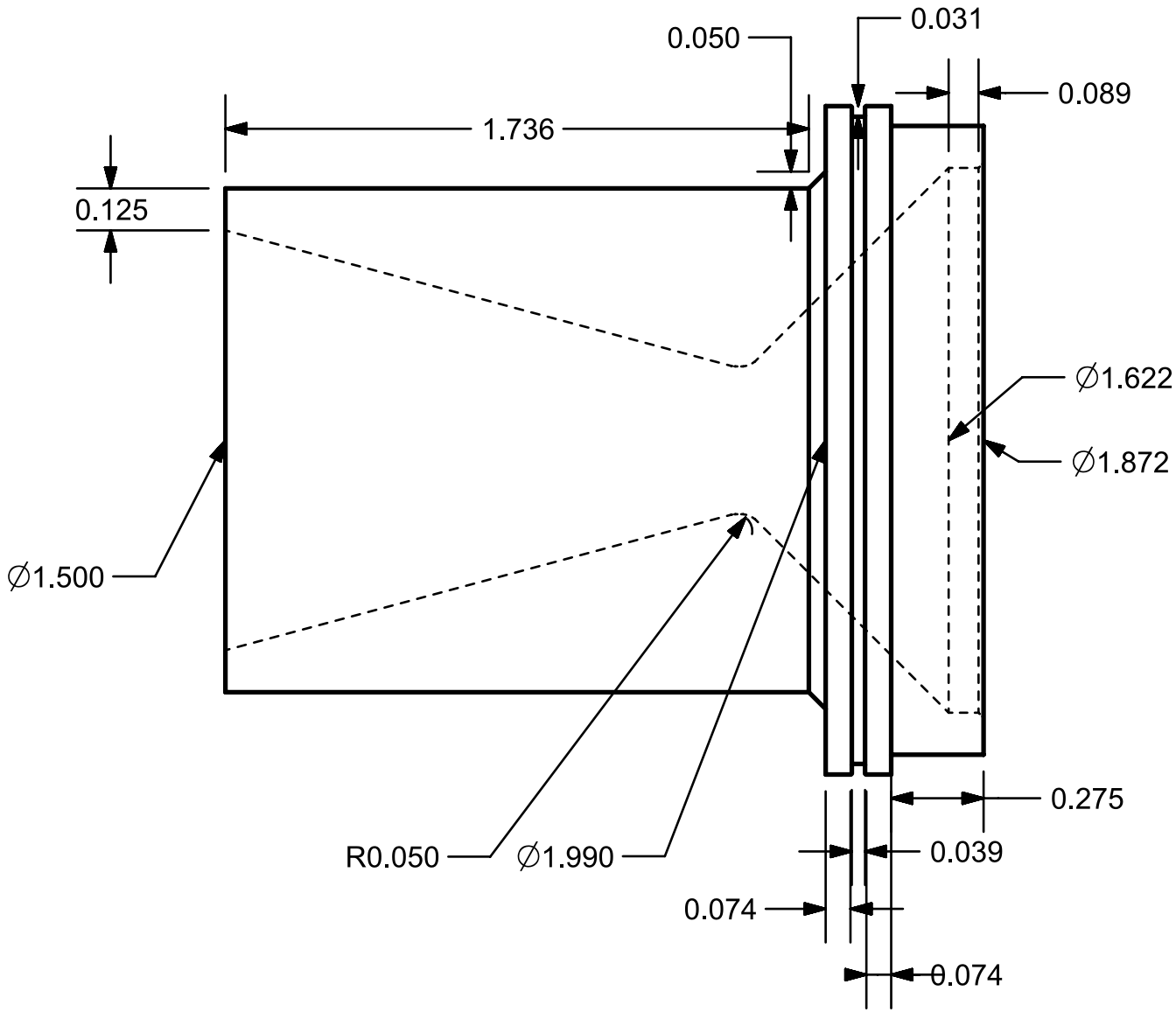

TOL		DATE	INIT	ISS:SOLID PROP	Minh Nguyen & Zach Dahhan			
XX ± .005	DRAWN	1/26/24	LFO	University of Illinois, Urbana IL				
XXX ± .002	CHEK'D	1/26/24	AC,HZ,PS	TITLE:	SCALE: DWG SCALE	DIM IN INCHS	DWG NO:	REV:
DEG ± 1°	ISSUED	01/26/24	LFO	54mm Nozzle	MAT'L: ALuminum	SHEET 1 of 1	000	0