LAB 4

MOTORI ELETTRICI CC

ELECTRIC DC MOTORS

DI CAPOZZI RICCARDO, MARINI NICCOLò E PARMA CHRISTIAN

Riassunto

IN QUESTA PRESENTAZIONE SPIEGHEREMO COME REALIZZARE VARI CIRCUITI UTILIZZANDO IL MOTORE ELETTRICO PRESENTE NEL KIT DI ARDUINO UNO R3.

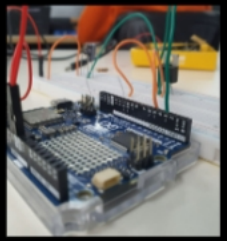

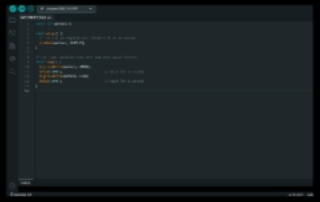

Summary

IN THIS PRESENTATION WE ARE GOING TO EXPLAIN HOW TO REALIZE VARIOUS ELECTRIC CIRCUITS USING THE ELECTRIC DC MOTOR INCLUDED IN THE ARDUINO R3 KIT.

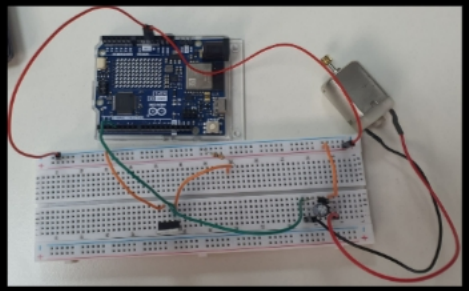

CONTENUTI/ *CONTENTS*

01. CIRCUITO 1 / *CIRCUIT 1*

02. CIRCUITO 2 / *CIRCUIT 2*

03. CIRCUITO 3 / *CRCUIT 3*

04. CIRCUITO 4 / *CRCUIT 4*

05. CIRCUITO 5 / *CRCUIT 5*

06. CIRCUITO 6 / *CRCUIT 6*

CIRCUITO 1 / *CIRCUIT 1*

In questo circuito vi spiegheremo come utilizzare il potenziometro per far partire gradualmente il motore.

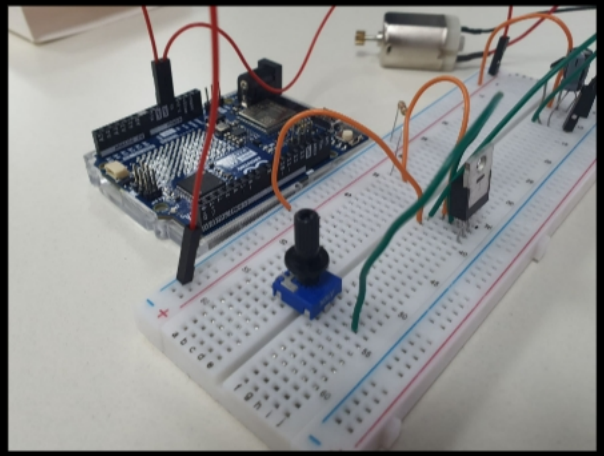

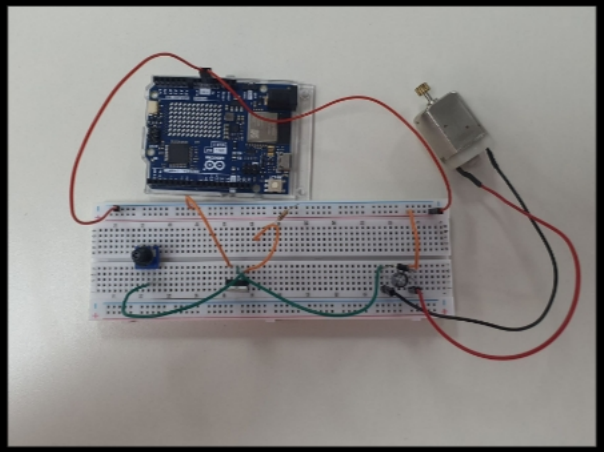

In this circuit we are going to explain to you how to use the potentiometer to make a DC motor spin gradually.

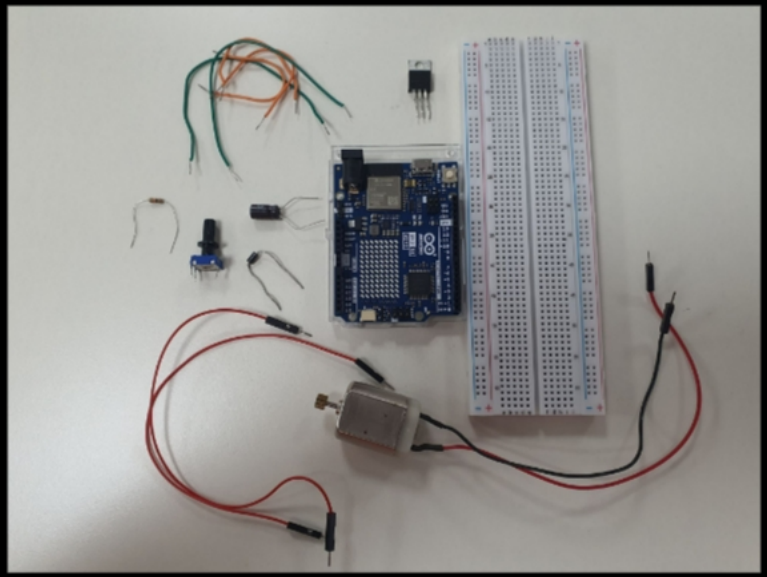

CIRCUITO 1 / *CIRCUIT 1*

COMPONENTI / *MATERIALS NEEDED*

Per realizzare questo circuito, serviranno:

- Scheda Arduino Uno R3 / R4;
- Breadboard;
- 2x Cavi Jumper;
- 7x Ponticelli;
- Potenziometro da 10k;
- Motore;
- Mosfet (IRF520N);
- Diodo (1N4007 / MIC);
- Resistenza da 10kΩ;
- Condensatore (100µF / 16V).

In order to realize this circuit, you will need:

- *Arduino Uno Board R3 / R4;*
- *Breadboard;*
- *2x Jumper Cables;*
- *7x Cables;*
- *10k Potenentiometer;*
- *Motor;*
- *Mosfet (IRF520N);*
- *Diode (1N4007 / MIC);*
- *10kΩ Resistor;*
- *Capacitor (100µF / 16V).*

CIRCUITO 1 / *CIRCUIT 1*

SCHEMA FRITZING / *FRITZING SCHEME*

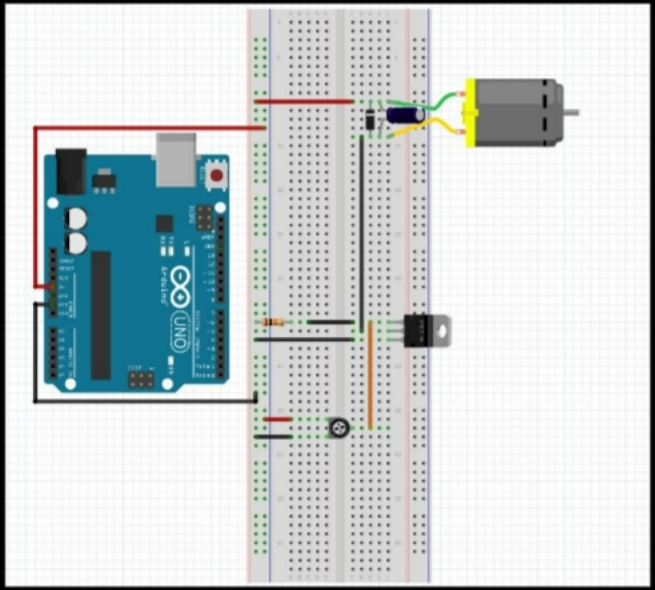

CIRCUITO 2 / *CIRCUIT 2*

In questo circuito vi spiegheremo come utilizzare un pushbutton per accendere e spegnere il motore.

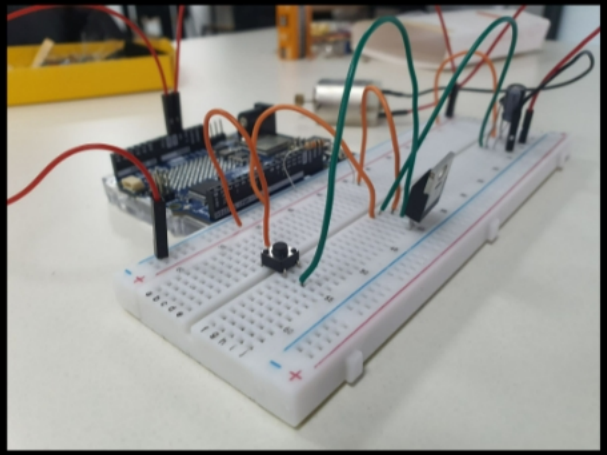

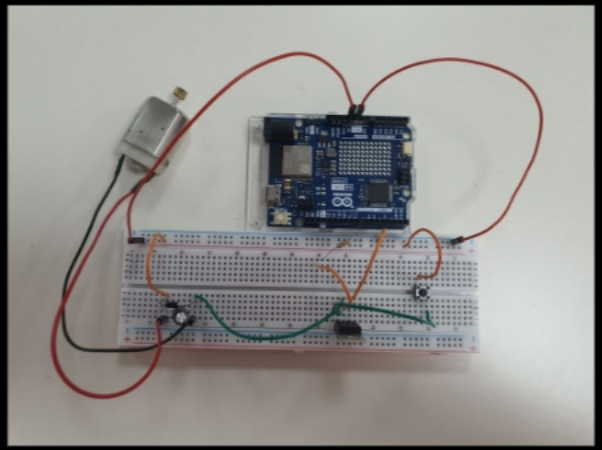

In this circuit we are going to explain to you how to use a pushbutton in order to make a motor spin and then stop.

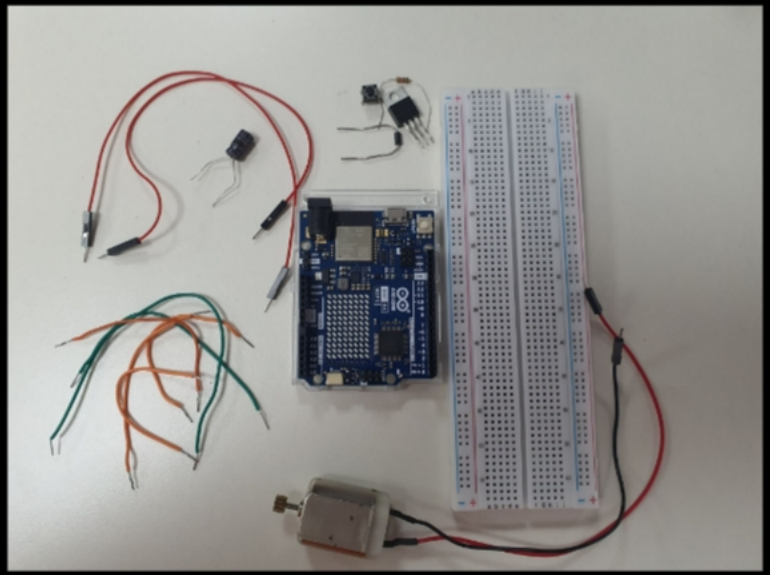

CIRCUITO 2 / *CIRCUIT 2*

COMPONENTI / *MATERIALS NEEDED*

Per realizzare questo circuito, serviranno:

- Scheda Arduino Uno R3 / R4;
- Breadboard;
- 2x Cavi Jumper;
- 6x Ponticelli;
- Pushbutton;
- Motore;
- Mosfet (IRF520N);
- Diodo (IN4007 / MIC);
- Resistenza da 10kΩ;
- Condensatore (100µF / 16V).

In order to realize this circuit, you will need:

- *Arduino Uno Board R3 / R4;*
- *Breadboard;*
- *2x Jumper Cables;*
- *6x Cables;*
- *Pushbutton;*
- *Motor;*
- *Mosfet (IRF520N);*
- *Diode (IN4007 / MIC);*
- *10kΩ Resistor;*
- *Capacitor (100µF / 16V).*

CIRCUITO 2 / *CIRCUIT 2*

SCHEMA FRITZING / *FRITZING SCHEME*

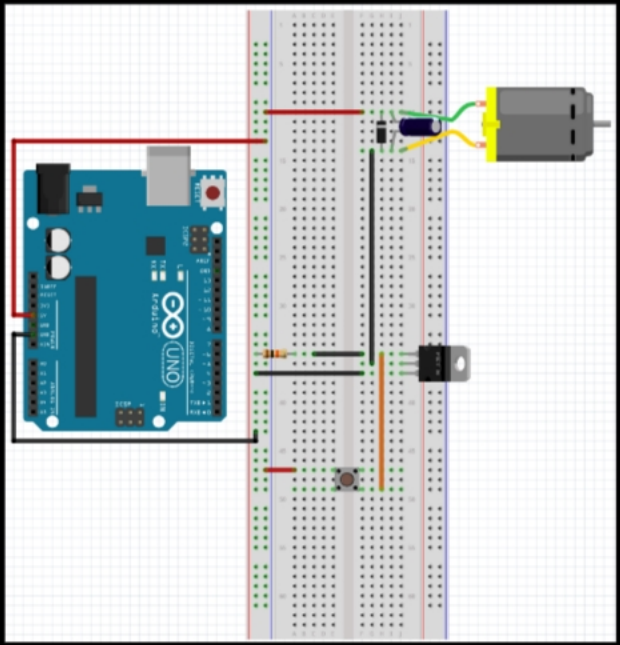

CIRCUITO 3 / *CIRCUIT 3*

In questo circuito vi spiegheremo come utilizzare Arduino IDE per accendere il motore in svariati modi.

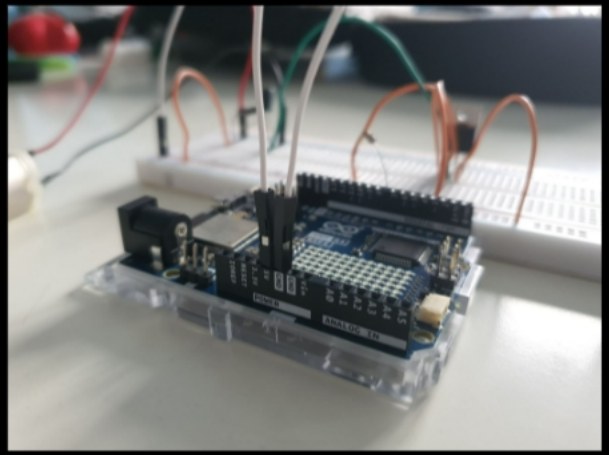

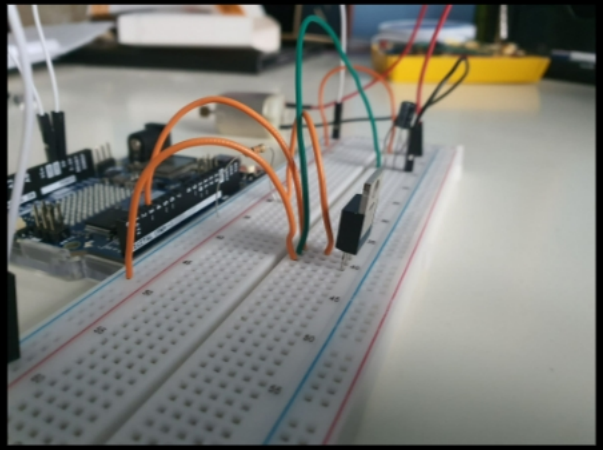

In this circuit we are going to explain to you how to use Arduino IDE in order to make a DC motor spin in various ways.

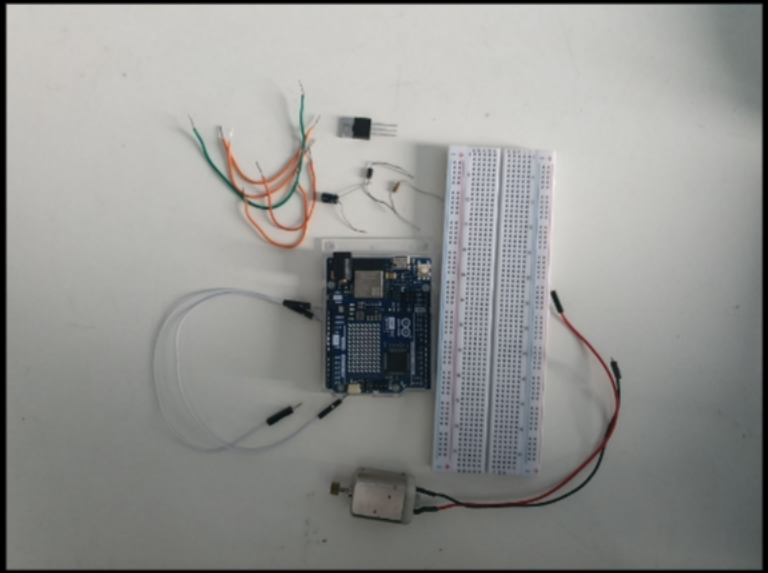

CIRCUITO 3 / *CIRCUIT 3*

COMPONENTI / *MATERIALS NEEDED*

Per realizzare questo circuito, serviranno:

- Scheda Arduino Uno R3 / R4;
- Breadboard;
- 2x Cavi Jumper;
- 5x Ponticelli;
- Motore;
- Mosfet (IRF520N);
- Diodo (IN4007 / MIC);
- Resistenza da 10kΩ;
- Condensatore (100µF / 16V).

In order to realize this circuit, you will need:

- *Arduino Uno Board R3 / R4;*
- *Breadboard;*
- *2x Jumper Cables;*
- *5x Cables;*
- *Motor;*
- *Mosfet (IRF520N);*
- *Diode (IN4007 / MIC);*
- *10kΩ Resistor;*
- *Capacitor (100µF / 16V).*

CIRCUITO 3 / *CIRCUIT 3*

SCHEMA FRITZING / *FRITZING SCHEME*

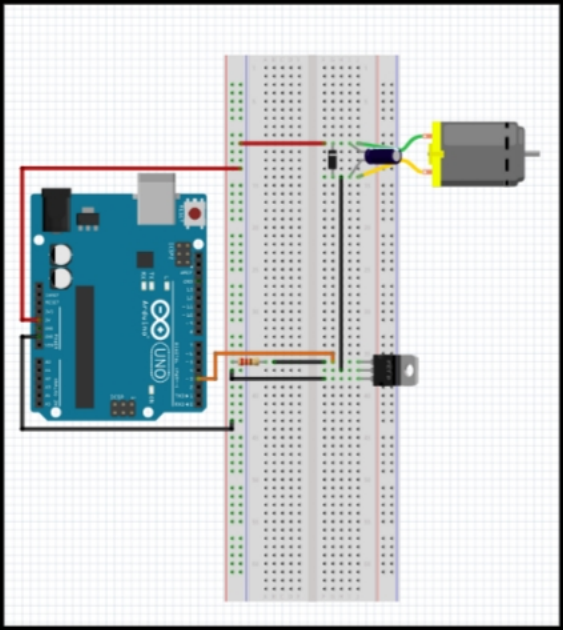

CODICE ACCENSIONE MOTORE CON MONITOR SERIALE

CODE TO SPIN THE DC MOTOR WITH THE SERIAL MONITOR

File Edit Sketch Tools Help

Arduino UNO R4 WiFi

MOTORE.ino

```
int motorPin = 3;
void setup()
{
pinMode (motorPin, OUTPUT);
Serial.begin(9600);
while (! Serial);
Serial.println("Speed 0 to 255");
}
void loop()
{
if (Serial.available())
{
int speed = Serial.parseInt();
if (speed >= 0 && speed <= 255)
{
analogWrite(motorPin, speed);
}
delay(100);
}
}
```

Output

Ln 21, Col 1 Arduino UNO R4 WiFi on COM3 [not connected]

SCAN ME

CODICI / CODES

CODICE ACCENSIONE MOTORE AD INTERMITTENZA
CODE TO SPIN THE DC MOTOR ON INTERMITTANCE

File Edit Sketch Tools Help

Arduino UNO R4 WiFi

INTERMITTENZA.ino

```
const int motore=3;

void setup() {
  // Initialize digital pin LED_BUILTIN as an output.
  pinMode(motore, OUTPUT);
}

// the loop function runs over and over again forever
void loop() {
  digitalWrite(motore, HIGH);
  delay(1000);                       // wait for a second
  digitalWrite(motore, LOW);
  delay(1000);                       // wait for a second
}
```

Output

indexing: 13/87

Ln 15, Col 1 Arduino UNO R4 WiFi on COM3 (not connected)

SCAN ME

CODICI / CODES

CIRCUITO 4 / *CIRCUIT 4*

In questo circuito vi spiegheremo come utilizzare Arduino IDE per accendere il motore e vedere sullo schermo LCD i suoi valori.

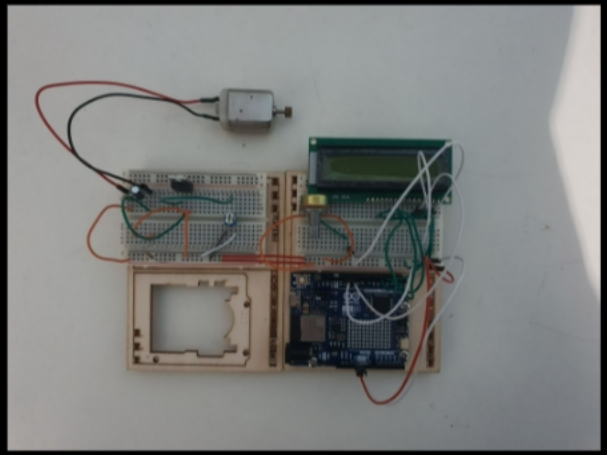

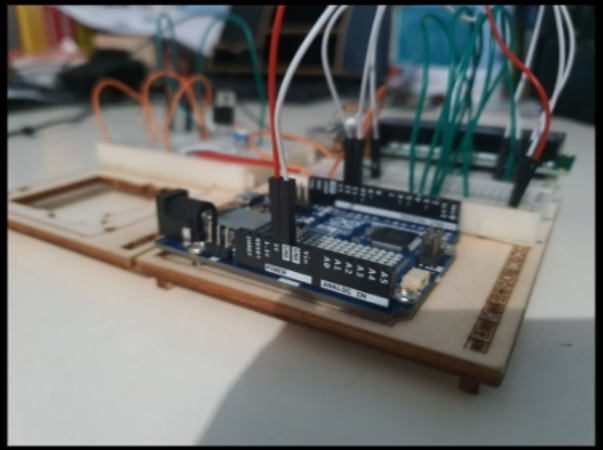

In this circuit we are going to explain to you how to use Arduino IDE in order to make a DC motor spin and see its values on an LCD screen.

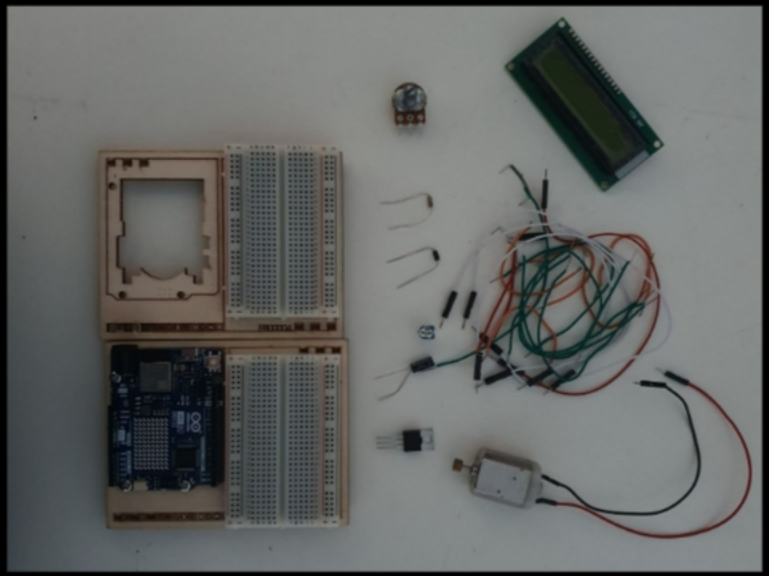

CIRCUITO 4 / *CIRCUIT 4*

COMPONENTI / *MATERIALS NEEDED*

Per realizzare questo circuito, serviranno:
- Scheda Arduino Uno R3 / R4;
- 2x Breadboard;
- 2x Cavi Jumper;
- 19x Ponticelli;
- Motore;
- Mosfet (IRF520N);
- Diodo (IN4007 / MIC);
- Resistenza da 10kΩ;
- Condensatore (100µF / 16V);
- 2x Potenziometri da 10k;
- Schermo LCD a cristalli liquidi;
- Arduino IDE Software (https://www.arduino.cc/en/software)

In order to realize this circuit, you will need:
- *Arduino Uno Board R3 / R4;*
- *2x Breadboard;*
- *2x Jumper Cables;*
- *19x Cables;*
- *Motor;*
- *Mosfet (IRF520N);*
- *Diode (IN4007 / MIC);*
- *10kΩ Resistor;*
- *Capacitor (100µF / 16V);*
- *2x 10k Potentiometers;*
- *LCD Liquid Crystals Screen;*
- *Arduino IDE Software (https://www.arduino.cc/en/software)*

CIRCUITO 4 / *CIRCUIT 4*

SCHEMA FRITZING / *FRITZING SCHEME*

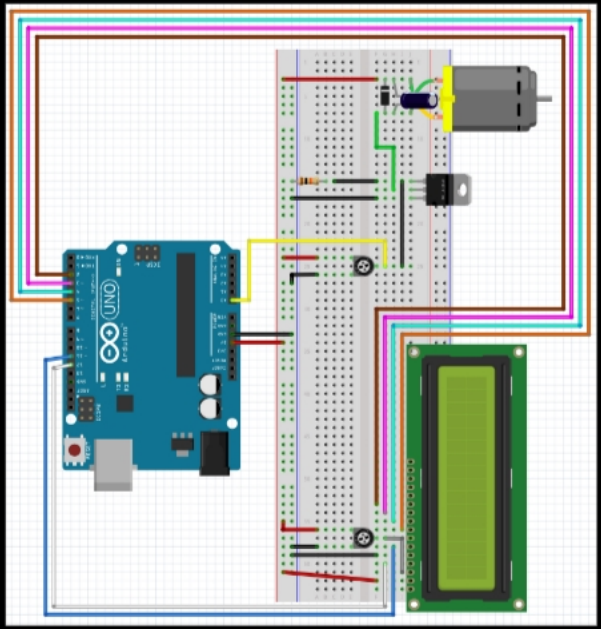

CODICE ACCENSIONE MOTORE CON LCD
CODE TO SPIN THE DC MOTOR WITH THE LCD SCREEN

File Edit Sketch Tools Help

Arduino UNO R4 WiFi

LCD.ino

```
 by Tom Igoe
 modified 7 Nov 2016
 by Arturo Guadalupi

 This example code is in the public domain.

 https://docs.arduino.cc/learn/electronics/lcd-displays#autoscroll-example
 https://github.com/arduino-libraries/LiquidCrystal
*/
// include the library code:
#include <LiquidCrystal.h>
const int pot=A0;
float value;

// initialize the library by associating any needed LCD interface pin
// with the Arduino pin number it is connected to
const int rs = 12, en = 11, d4 = 5, d5 = 4, d6 = 3, d7 = 2;
LiquidCrystal lcd(rs, en, d4, d5, d6, d7);

void setup() {
  // set up the LCD's number of columns and rows:
  lcd.begin(16, 2);
  pinMode(pot,INPUT);
}

void loop() {
  // set the cursor to (0,0):
  lcd.setCursor(0, 0);
  // print from 0 to 9:
    value=analogRead(pot);
    lcd.print("Value is: ");

    lcd.print(value);

    delay(500);



}

```

Output

Indexing: 42/68

Ln 71, Col 1 Arduino UNO R4 WiFi on COM3 [not connected]

SCAN ME

CODICI / CODES

CIRCUITO 5 / *CIRCUIT 5*

In questo circuito vi spiegheremo come utilizzare Arduino IDE per accendere il motore con il sensore della temperatura.

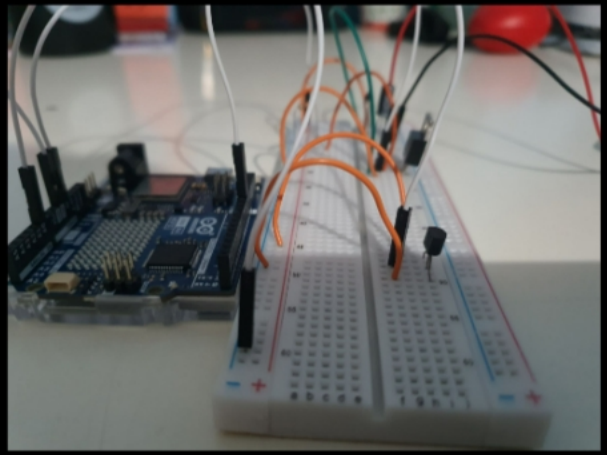

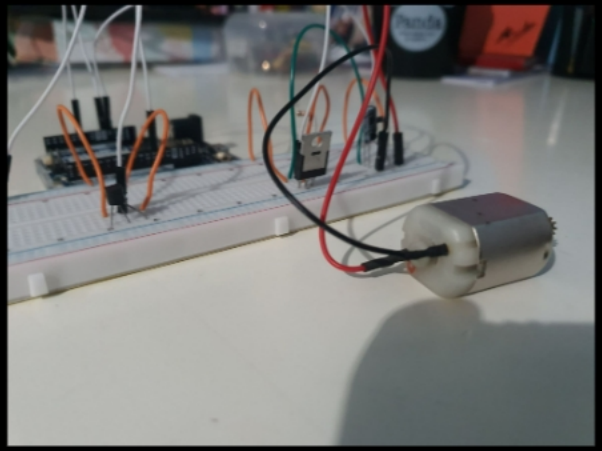

In this circuit we are going to explain to you how to use Arduino IDE in order to make a DC motor spin thanks to the temperature sensor.

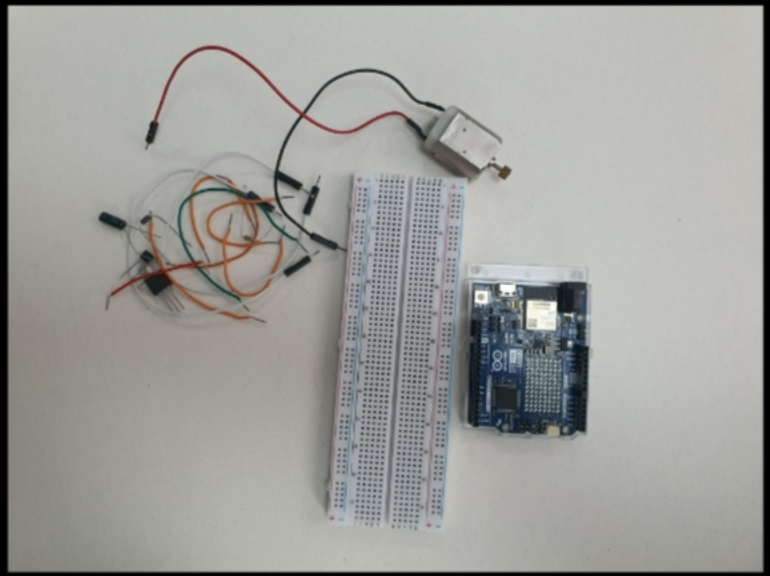

CIRCUITO 5 /
CIRCUIT 5

COMPONENTI / *MATERIALS NEEDED*

Per realizzare questo circuito, serviranno:
- Scheda Arduino Uno R3 / R4;
- Breadboard;
- 2x Cavi Jumper;
- 7x Ponticelli;
- Motore;
- Mosfet (IRF520N);
- Diodo (IN4007 / MIC);
- Resistenza da 10kΩ;
- Condensatore (100µF / 16V);
- Sensore della temperatura TMP
- Arduino IDE Software
(https://www.arduino.cc/en/software)

Opzionale:
- Multimetro.

In order to realize this circuit, you will need:
- *Arduino Uno Board R3 / R4;*
- *Breadboard;*
- *2x Jumper Cables;*
- *7x Cables;*
- *Motor;*
- *Mosfet (IRF520N);*
- *Diode (IN4007 / MIC);*
- *10kΩ Resistor;*
- *Capacitor (100µF / 16V);*
- *Temperature Sensor TMP*
- *Arduino IDE Software*
(https://www.arduino.cc/en/software)

Optional:
- *Multimeter.*

CIRCUITO 5 / *CIRCUIT 5*

SCHEMA FRITZING / *FRITZING SCHEME*

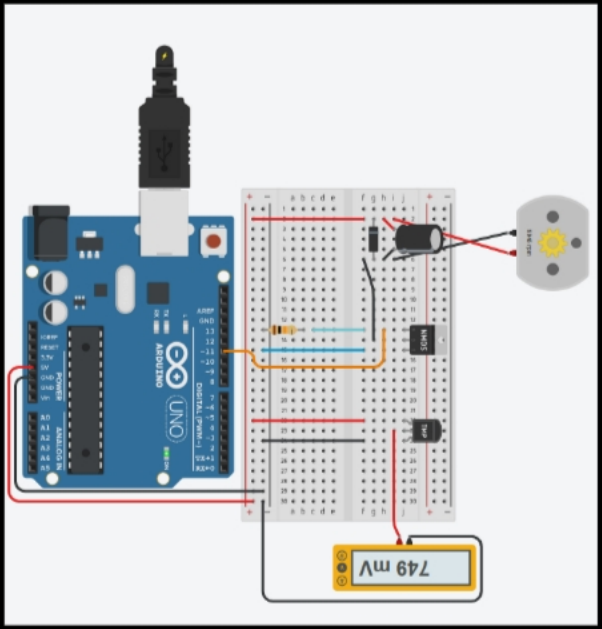

CODICE ACCENSIONE MOTORE CON SENSORE DI TEMPERATURA

CODE TO SPIN THE DC MOTOR WITH THE TEMPERATURE SENSOR

Ile Edit Sketch Tools Help

Select Board

sketch_mar11a.ino

```
1  void setup()
2  {
3    pinMode(A0, INPUT);
4    pinMode(11, OUTPUT);
5  }
6
7  void loop()
8  {
9    float value=analogRead(A0);
10   float volt=value*5/1023;
11
12   if (volt > 0,5){
13     digitalWrite(11, HIGH);
14   }
15 }
16
```

Ln 16, Col 1 ✕ No board selected

SCAN ME

CODICI / CODES

CIRCUITO 6 / *CIRCUIT 6*

In questo circuito vi spiegheremo come utilizzare Arduino IDE per accendere proporzionalmente alla temperatura il motore.

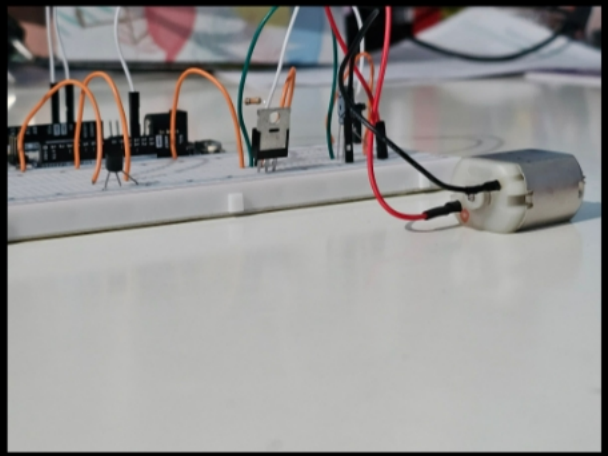

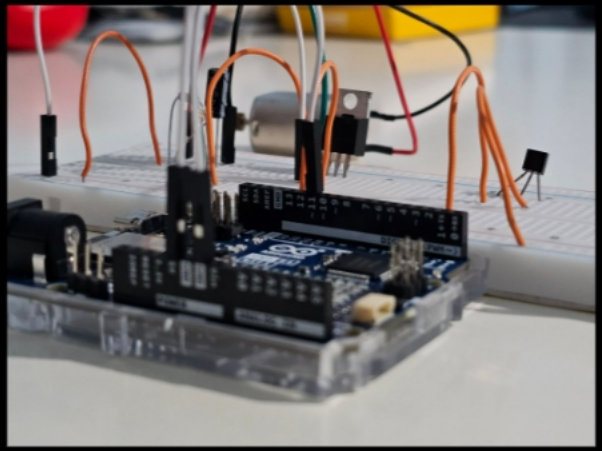

In this circuit we are going to explain to you how to use Arduino IDE in order to make a DC motor spin proportionally to the temperature.

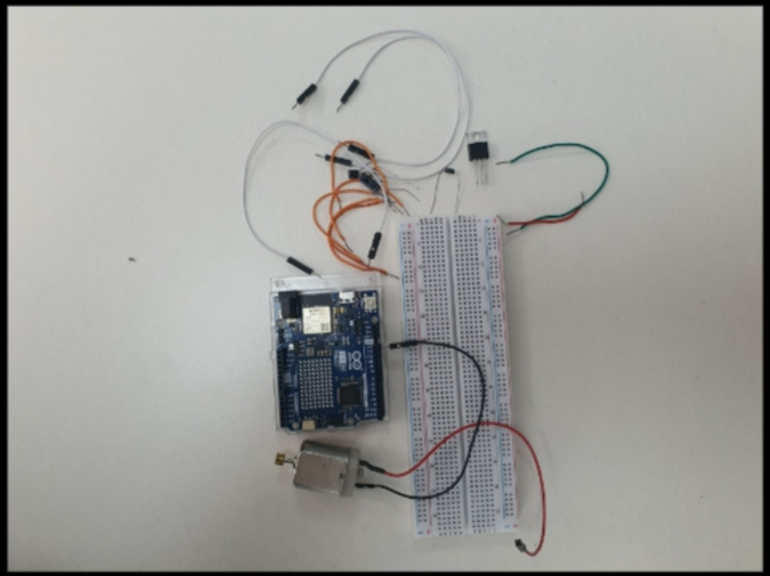

CIRCUITO 6 / *CIRCUIT 6*

COMPONENTI / *MATERIALS NEEDED*

Per realizzare questo circuito, serviranno:
- Scheda Arduino Uno R3 / R4;
- Breadboard;
- 2x Cavi Jumper;
- 8x Ponticelli;
- Motore;
- Mosfet (IRF520N);
- Diodo (IN4007 / MIC);
- Resistenza da 10kΩ;
- Condensatore (100µF / 16V);
- Sensore della temperatura TMP
- Arduino IDE Software
(https://www.arduino.cc/en/software)

Opzionale:
- Multimetro.

In order to realize this circuit, you will need:
- *Arduino Uno Board R3 / R4;*
- *Breadboard;*
- *2x Jumper Cables;*
- *8x Cables;*
- *Motor;*
- *Mosfet (IRF520N);*
- *Diode (IN4007 / MIC);*
- *10kΩ Resistor;*
- *Capacitor (100µF / 16V);*
- *Temperature Sensor TMP*
- *Arduino IDE Software*
(https://www.arduino.cc/en/software)

Optional:
- *Multimeter.*

CIRCUITO 6 / *CIRCUIT 6*

SCHEMA FRITZING / *FRITZING SCHEME*

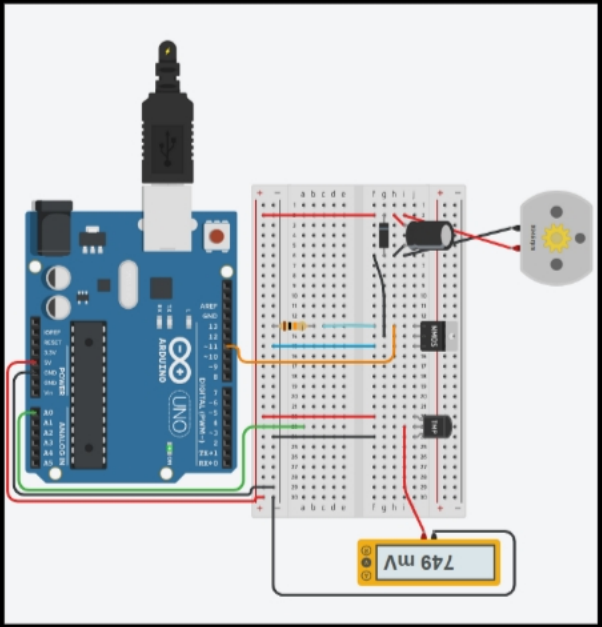

CODICE ACCENSIONE MOTORE CON SENSORE DI TEMPERATURA

CODE TO SPIN THE DC MOTOR WITH THE TEMPERATURE SENSOR

Edit Sketch Tools Help

Select Board

sketch_mar11a.ino

```
void setup()
{
  pinMode(A0, INPUT);
  pinMode(11, OUTPUT);
}

void loop()
{
  float value=analogRead(A0);
  float volt=value*5/1023;
  int speed=map(volt, 0, 0.8, 0, 255);
  analogWrite(11, speed);
}
```

Ln 14, Col 1 ✕ No board selected

SCAN ME

CODICI / CODES

GRAZIE PER L'ATTENZIONE!

SCAN ME

SOCIAL MEDIA