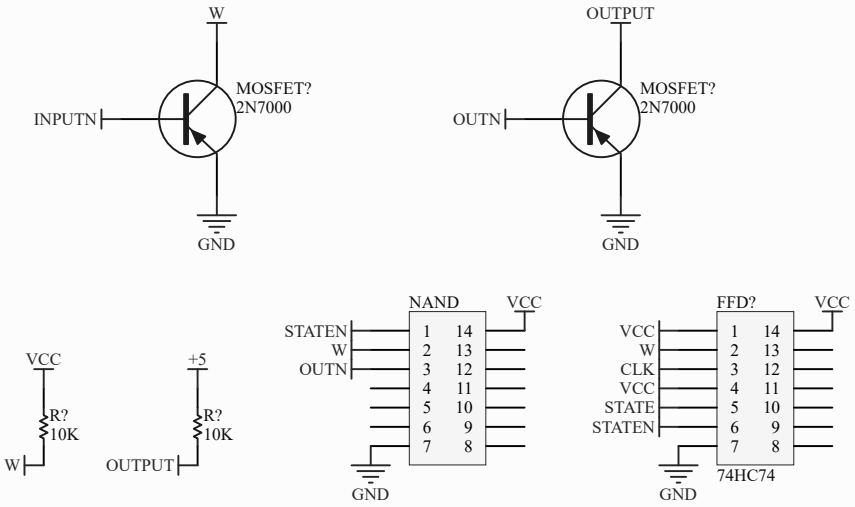

Title		
Size A4	Number	Revision
Date: 14/11/2018	Sheet of	
File: Sheet1.SchDoc	Drawn By:	