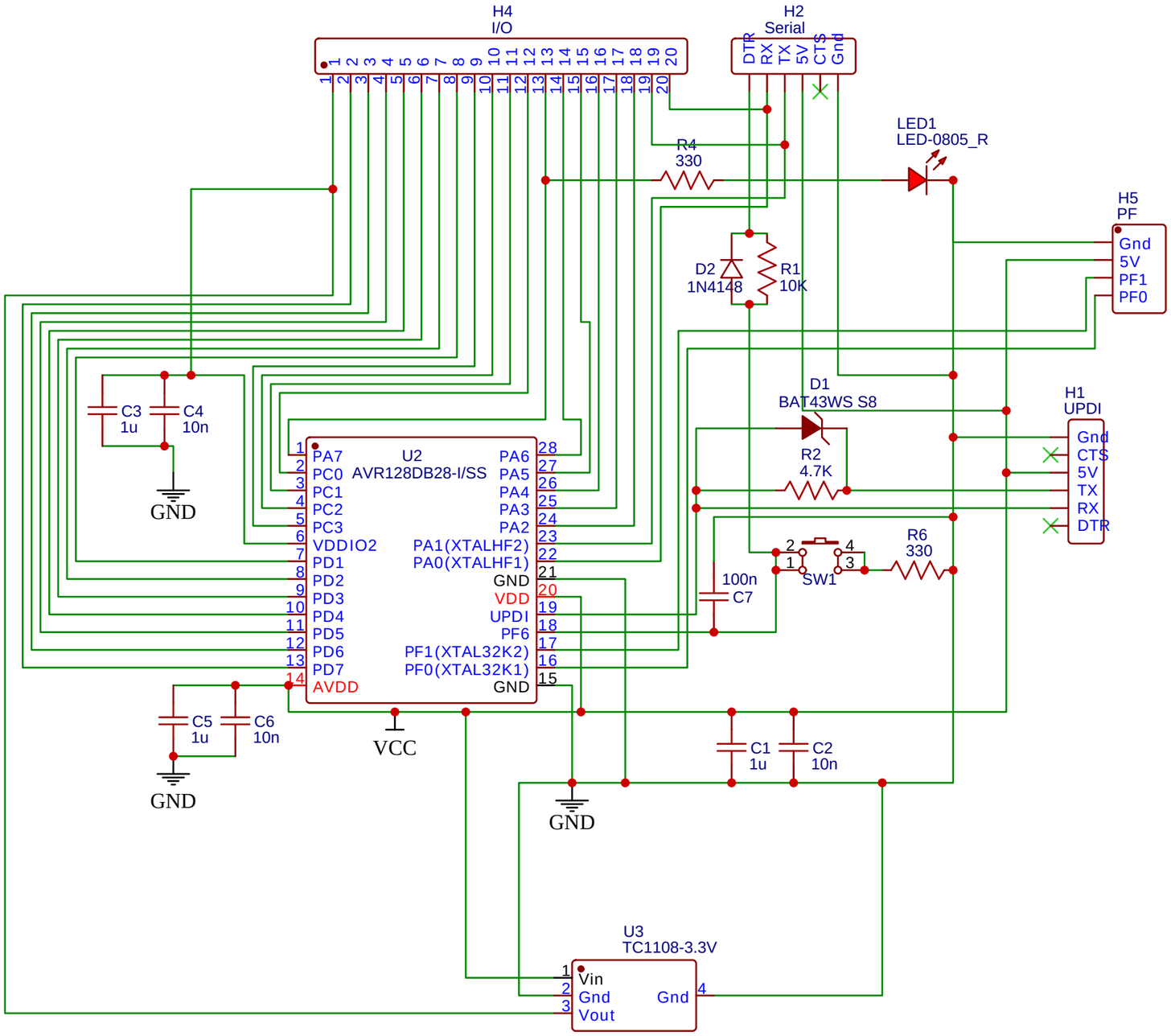

TITLE: Surface Mount AVRXXDY28	REV: 1.0
Company: Your Company	Sheet: 1/1
Date: 2022-12-29 Drawn By: Peter Nichols	