CS100
Introduction to Programming

Lecture 6. Pointers

Address and Pointer

Address of a Variable

- **What is the address in C?**
  - An integer indicating the numerical number of memory storage unit
  - Usually in binary or hexadecimal format

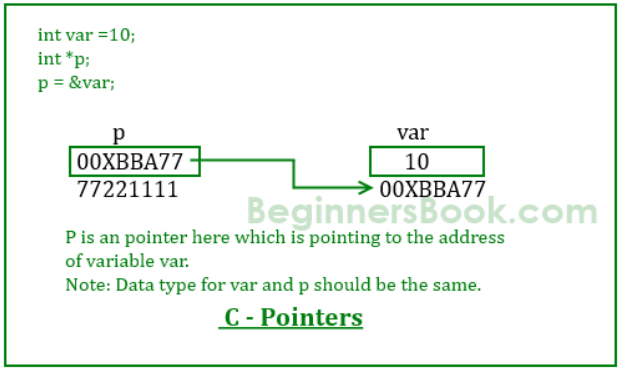

Computer		Programmers		
Address	Content	Name	Type	Value
90000000	00			
90000001	00	sum	int (4 bytes)	000000FF(255_{10})
90000002	00			
90000003	FF			
90000004	FF	age	short (2 bytes)	FFFF(-1_{10})
90000005	FF			
90000006	1F	averge	double (8 bytes)	1FFFFFFFFFFFFFFF ($4.45015E-308_{10}$)
90000007	FF			
90000008	FF			
90000009	FF			
9000000A	FF			
9000000B	FF			
9000000C	FF			
9000000D	FF			
9000000E	90	ptrSum	int* (4 bytes)	90000000
9000000F	00			
90000010	00			
90000011	00			

Note: All numbers in hexadecimal

Address Operator (&)

```
#include <stdio.h>
int main(void)
{
   int num = 5;

   printf("num = %d, &num = %p\n", num, &num);
   scanf("%d", &num);
   printf("num = %d, &num = %p\n", num, &num);
   return 0;
}
```

This value is just for **illustration**, and may be different for another run.

Output:

num = 5, &num = 1024

10

num = 10, &num = 1024

Pointer Variables

- We may have variables which store the addresses of memory locations of some data objects. These variables are called **pointers**.
- A **pointer variable** is declared by **`dataType *pointerName`**, for example:

`int *ptrI;`	/* Variable `ptrI` is a pointer. It stores the address of a memory location for an **integer** */
`float *ptrF;`	/* Variable `ptrF` is a pointer. It stores the address of a memory location for a **float** */
`char *ptrC;`	/* Variable `ptrC` is a pointer. It stores the address of a memory location for a **char** */

- The **value** of a pointer variable is an **address**.

Pointer Variables

Example:

```
int a = 20; float b = 40.0; char c = 'a';
int *ptrI; float *ptrF; char *ptrC;
ptrI = &a; ptrF = &b; ptrC = &c;
```

Statement	Operation
int *ptrI	ptrI: ? — Uninitialized Pointer
ptrI = &a;	ptrI: 1000 → a: 20 — Address = 1000
ptrF = &b;	ptrF: 2000 → b: 40.0 — Address = 2000
ptrC = &c;	ptrC: 3000 → c: a — Address = 3000
int *ptr = NULL;	ptr: NULL

Pointer To Pointer

- A pointer storing the value of another pointer

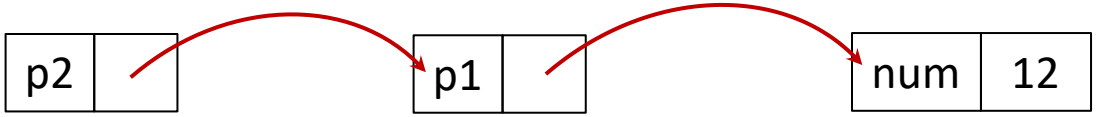


```
#include <stdio.h>

int main(void)
{
   float num=12;
   float* p1=&num;
   float** p2=&p1;

   return 0;
}
```

Indirection Operators (*)

- The **content** of the memory location pointed to by a pointer variable is referred to by using the **indirection operator *** .

- If a pointer variable is defined as **ptr**, we use the expression ***ptr** to *dereference* the pointer to obtain the value stored at the address pointed to by the pointer **ptr**.

Indirection Operator – Example 1

```
#include <stdio.h>
int main(void)
{
   int num = 3;
   int *ptr;

   ptr = &num;
   printf("num = %d, &num = %p\n", num, &num);
   printf("ptr = %p, *ptr = %d\n", ptr, *ptr);
   *ptr = 10;
   printf("num = %d, &num = %p\n", num, &num);
   return 0;
}
```

Statement	Operation
ptr = #	ptr 1024 → num 3 Address = 1024
*ptr = 10;	ptr 1024 → num 10 Address = 1024

Output:

num = 3, &num = 1024

ptr = 1024, *ptr = 3

num = 10, &num = 1024

Indirection Operator – Example 2

```
/* example to show the use of pointers */
#include <stdio.h>

int main(void)
{
    int num1 = 3, num2 = 5;
    int *ptr1, *ptr2;

    ptr1 = &num1; // put the address of num1 into ptr1
    printf("num1 = %d, *ptr1 = %d\n", num1, *ptr1);

    (*ptr1)++; /* increment by 1 the content of the
                  memory location pointed to by ptr1 */
    printf("num1 = %d, *ptr1 = %d\n", num1, *ptr1);

    ptr2 = &num2; // put the address of num2 into ptr2
    printf("num2 = %d, *ptr2 = %d\n", num2, *ptr2);
```

Code continues in next slide …

Output:

num1 = 3, *ptr1 = 3
num1 = 4, *ptr1 = 4
num2 = 5, *ptr2 = 5

```
    *ptr2 = *ptr1; /* copy the content of the location
                      pointed to by ptr1 into the
                      location pointed to by ptr2 */
    printf("num2 = %d, *ptr2 = %d\n", num2, *ptr2);

    *ptr2 = 10;  /* 10 is copied into the location
                      pointed to by ptr2 */
    num1 = *ptr2; /* copy the content of the memory
                      location pointed to by ptr2
                      into num1 */
    printf("num1 = %d, *ptr1 = %d\n", num1, *ptr1);

    *ptr1 = *ptr1 * 5;
    printf("num1 = %d, *ptr1 = %d\n", num1, *ptr1);

    ptr2 = ptr1; // address in ptr1 copied into ptr2
    printf("num2 = %d, *ptr2 = %d\n", num2, *ptr2);

    return 0;
}
```

Output:

num2 = 4, *ptr2 = 4
num1 = 10, *ptr1 = 10
num1 = 50, *ptr1 = 50
num2 = 10, *ptr2 = 50

Indirection Operator – Example 2

Statement	num1 (addr = 1024)	num2 (addr = 2048)	ptr1	ptr2
int num1 = 3, num2 = 5;	3	5		
int *ptr1, *ptr2;	3	5	?	?
ptr1 = &num1;	3	5	1024	?
(*ptr1)++;	4	5	1024	?
ptr2 = &num2;	4	5	1024	2048
*ptr2 = *ptr1;	4	4	1024	2048
*ptr2 = 10;	4	10	1024	2048
num1 = *ptr2;	10	10	1024	2048
*ptr1 = *ptr1 * 5;	50	10	1024	2048
ptr2 = ptr1;	50	10	1024	1024

Multiple Indirection

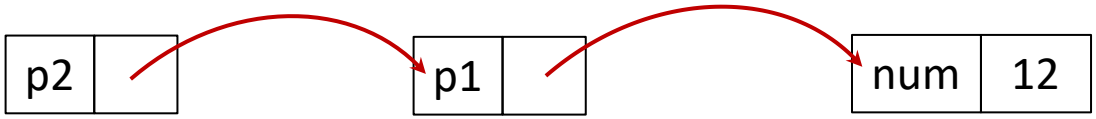


```
#include <stdio.h>

int main(void)
{
   float num=12;
   float* p1=&num;
   float** p2=&p1;

   printf(“the content with indirection once: %f”, *p1);
   printf(“the content with indirection twice: %f”, *(*p2));

   return 0;
}
```

How function is called?

- **Entry point**
  - the first instruction a program is executed
  - In C/C++, the main() function

```
int main(void);
int main();

int main(int argc, char **argv);
```

  - Loader of operating system will load the program into memory, giving the entry point a specific address
  - This marks the transition from load time to run time.

How function is called?

- **Function (call) stack**
  - What is a stack?
    - A data structure to store data in a first-in-last-out order
    - Two operations:
      - push (into the stack) / pop (out of the stack)

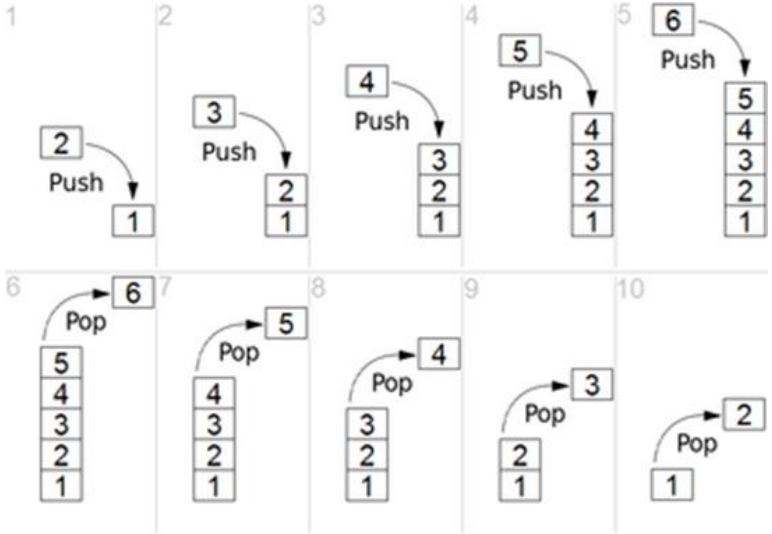

How function is called?

- **Function call process**
  - With the aid of function call stack, storing pointers

```
#include <stdio.h>
float compute_compound(float x);
float function(float x);

void main()
{
    float f=compute_compound(10.0);
    printf("the result is: %f\n", f);
    return 0;
}

float compute_compound()
{
    return exp(function(x));
}

float function(float x)
{
    return sin(x)*sin(x);
}
```

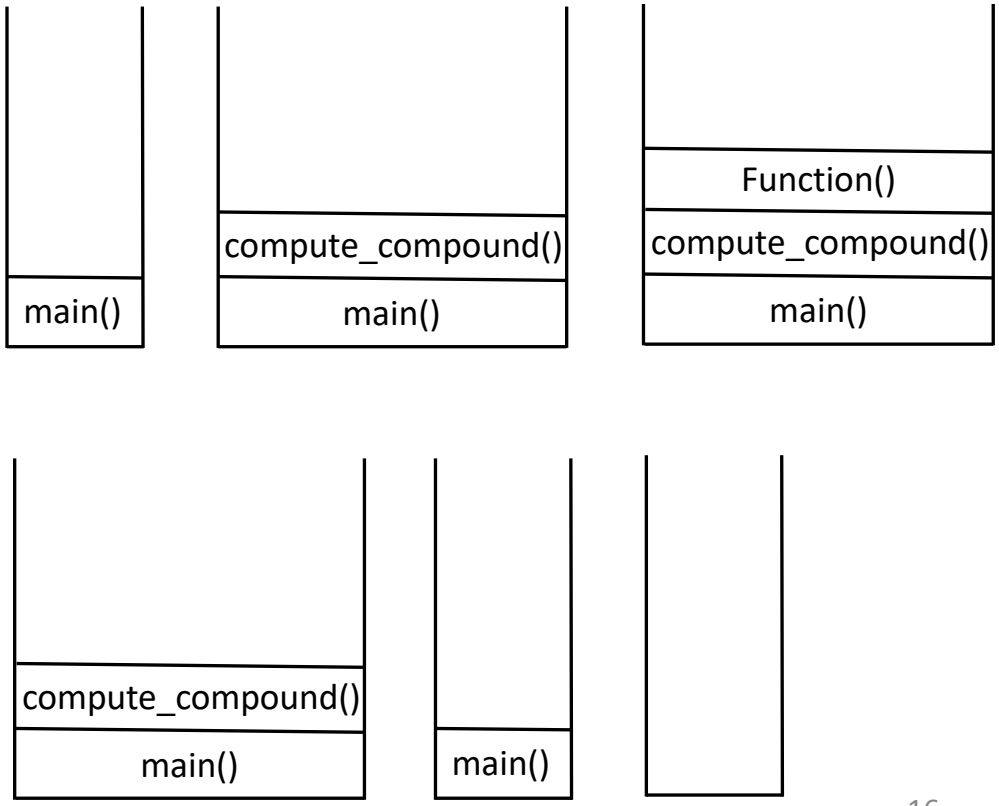

Call by Pointer

- **Parameter passing between functions has two modes:**
  - Call by value
  - Call by pointer
- **Call by value**: The argument of a function has a local copy when it is passed to the function.
- **Call by pointer**: The argument of a function shares the same **address** of the argument variable, no argument copy is performed.
  - Therefore, a change to the value pointed to by the parameter **changes** the argument value (instantly).

Call by Pointer – Example 1

```
#include <stdio.h>
void add2(int *ptr);
int main(void)
{
    int num = 5;
    // passing the address of num
    add2(&num);
    printf("Value of num is: %d",
           num);
    return 0;
}

void add2(int *ptr)
{
    ++(*ptr);
}
```

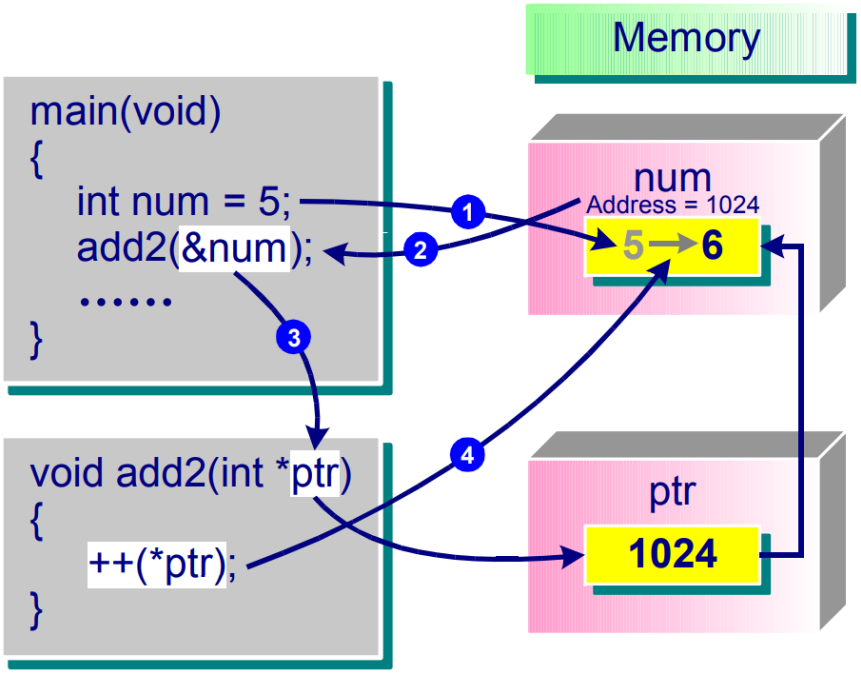

Output:
Value of num is: 6

Call by Pointer – Example 2

```
#include <stdio.h>

void function1(int a, int *b);
void function2(int c, int *d);
void function3(int h, int *k);

int main(void) {
   int x, y;
   x = 5; y = 5;                    /* (i) */
   function1(x, &y);                /* (x) */
   return 0;
}
void function1(int a, int *b) {     /* (ii) */
   *b = *b + a;                     /* (iii) */
   function2(a, b);                 /* (ix) */
}
void function2(int c, int *d) {     /* (iv) */
   *d = *d * c;                     /* (v) */
   function3(c, d);                 /* (viii) */
}
void function3(int h, int *k) {     /* (vi) */
   *k = *k – h;                     /* (vii) */
}
```

Call by Pointer – Example 2

```
main(void)
{
    int x, y;
    x = 5; y = 5;
    function1(x, &y);
    return 0;
}
```

```
void function1(int a, int *b)
{
    *b = *b + a;        5 + 5
    function2(a, b);
}
```

```
void function2(int c, int *d)
{
    *d = *d * c;        10 * 5
    function3(c, d);
}
```

```
void function3(int h, int *k)
{
    *k = *k - h;        50 - 5
}
```

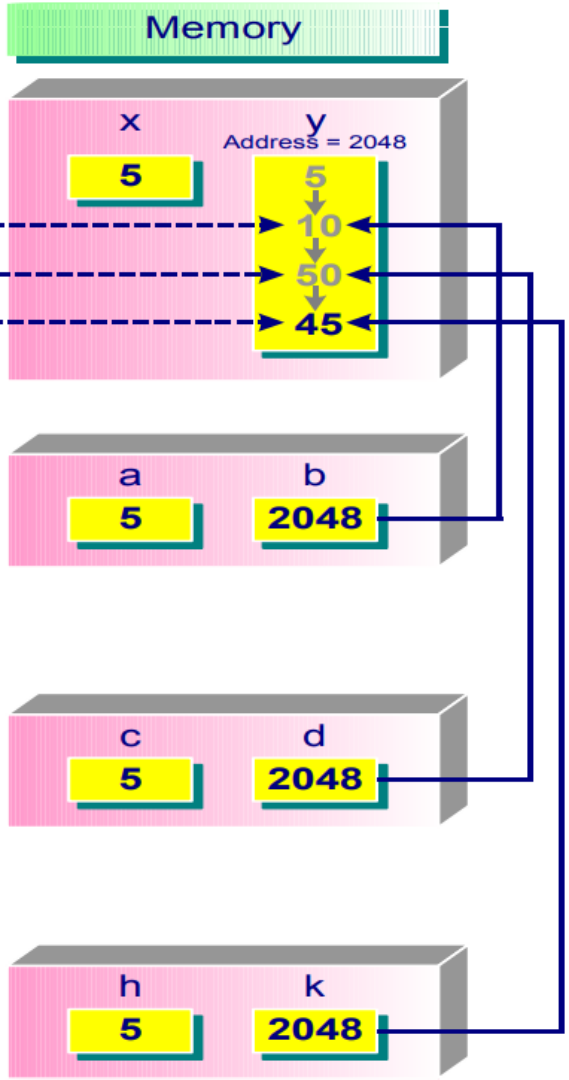

Call by Pointer – Example 2

	x	y	a	*b	c	*d	h	*k	remarks
(i)	5	5	-	-	-	-	-	-	
(ii)	5	5	5	5	-	-	-	-	
(iii)	5	10	5	10	-	-	-	-	
(iv)	5	10	5	10	5	10	-	-	
(v)	5	50	5	50	5	50	-	-	
(vi)	5	50	5	50	5	50	5	50	
(vii)	5	45	5	45	5	45	5	45	
(viii)	5	45	5	45	5	45	-	-	
(ix)	5	45	5	45	-	-	-	-	
(x)	5	45	-	-	-	-	-	-	

When to Use "Call by Pointer"?

- When you need to pass more than one value **back** from a function.

- When using *call by value,* it results in a large piece of information being **copied** to the local memory, e.g. passing large arrays.
  - In such cases, for the sake of **efficiency**, we'd better use call by reference.

Call by Reference

- **Call by reference**: The argument of a function is another name of the same variable, no argument copy is performed.
  - Therefore, a change to the value of the parameter **changes** the argument value (instantly).
  - Declaration of a reference variable

```
float a=10.0;
float& b=a; //reference variable should be initialized.

b=15;
printf("the value of a is: %f\n",a);
```

Example: multiple function return values

- Get the area and circumference of a circle

```
#include <stdio.h>
#define PI 3.1415926

void GetCircleInfo(float R, float *area, float *circum);

int main(void) {
  float R=0, area=0, circum=0;
  scanf("Input circle radius: %f", &R);

  GetCircleInfo(R, &area, &circum);
  printf("The circle area is :%f\n", area);
  printf("The circle circumference is :%f\n", area);

  return 0;
}

void GetCircleInfo(float R, float *area, float *circum){
   *area=PI*R*R;
   *circum=2*PI*R;
}
```

/*Using pointer implementation*/

Example: multiple function return values

- Get the area and circumference of a circle

```
#include <stdio.h>
#define PI 3.1415926

void GetCircleInfo(float R, float &area, float &circum);

int main(void) {
  float R=0, area=0, circum=0;
  scanf("Input circle radius: %f", &R);

  GetCircleInfo(R, area, circum);
  printf("The circle area is :%f\n", area);
  printf("The circle circumference is :%f\n", area);

  return 0;
}

void GetCircleInfo(float R, float &area, float &circum){
   area=PI*R*R;
   circum=2*PI*R;
}
```

/*Using reference implementation*/

Function Pointers

- **A subroutine pointer or procedure pointer**
  - A pointer that points to a function
  - Points to executable code within memory

```c
#include <stdio.h>  /* for printf */
#include <string.h> /* for strchr */

double cm_to_inches(double cm) {
    return cm / 2.54;
}

// "strchr" is part of the C string handling (i.e., no need for declaration)
// See https://en.wikipedia.org/wiki/C_string_handling#Functions

int main(void) {
    double (*func1)(double) = cm_to_inches;
    char * (*func2)(const char *, int) = strchr;
    printf("%f %s", func1(15.0), func2("Wikipedia", 'p'));
    /* prints "5.905512 pedia" */
    return 0;
}
```

Function Pointer as Function Parameter

```c
#include <math.h>
#include <stdio.h>

// Function taking a function pointer as an argument
double compute_sum(double (*funcp)(double), double lo, double hi) {
    double sum = 0.0;

    // Add values returned by the pointed-to function '*funcp'
    int i;
    for(i = 0;  i <= 100;  i++) {
        // Use the function pointer 'funcp' to invoke the function
        double x = i / 100.0 * (hi - lo) + lo;
        double y = funcp(x);
        sum += y;
    }
    return sum / 101.0;
}

double square(double x) {
     return x * x;
}

int main(void) {
    double  sum;

    // Use standard library function 'sin()' as the pointed-to function
    sum = compute_sum(sin, 0.0, 1.0);
    printf("sum(sin): %g\n", sum);

    // Use standard library function 'cos()' as the pointed-to function
    sum = compute_sum(cos, 0.0, 1.0);
    printf("sum(cos): %g\n", sum);

    // Use user-defined function 'square()' as the pointed-to function
    sum = compute_sum(square, 0.0, 1.0);
    printf("sum(square): %g\n", sum);

    return 0;
}
```