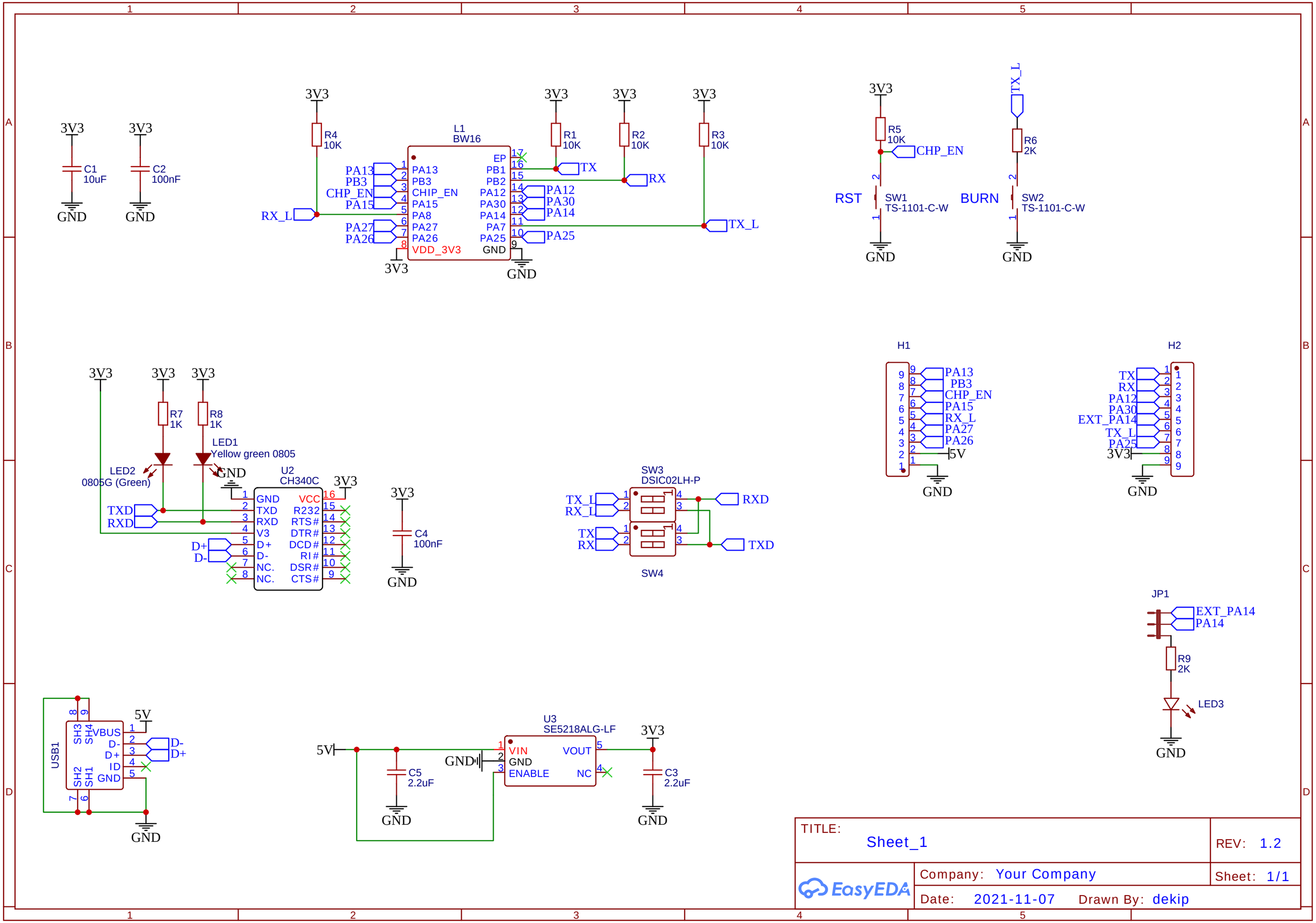
3V3
C1
10uF
GND
C2
100nF
R4
10K
RX_L
L1
BW16
PA13
PB3
CHP_EN
PA15
PA8
PA27
PA26
VDD_3V3
EP
PB1
PB2
PA12
PA30
PA14
PA7
PA25
R1
10K
R2
10K
R3
10K
TX
RX
TX_L
R5
10K
CHP_EN
RST
SW1
TS-1101-C-W
BURN
SW2
TS-1101-C-W
R6
2K
R7
1K
R8
1K
LED1
Yellow green 0805
LED2
0805G (Green)
U2
CH340C
GND
VCC
TXD
RXD
V3
D+
D-
NC.
R232
RTS#
DTR#
DCD#
RI#
DSR#
CTS#
C4
100nF
SW3
DSIC02LH-P
SW4
H1
5V
H2
EXT_PA14
JP1
R9
2K
LED3
USB1
VBUS
ID
SH1
SH2
SH3
SH4
U3
SE5218ALG-LF
VIN
ENABLE
VOUT
NC
C5
2.2uF
C3
2.2uF
TITLE:
Sheet_1
REV: 1.2
Company: Your Company
Sheet: 1/1
Date: 2021-11-07
Drawn By: dekip
EasyEDA