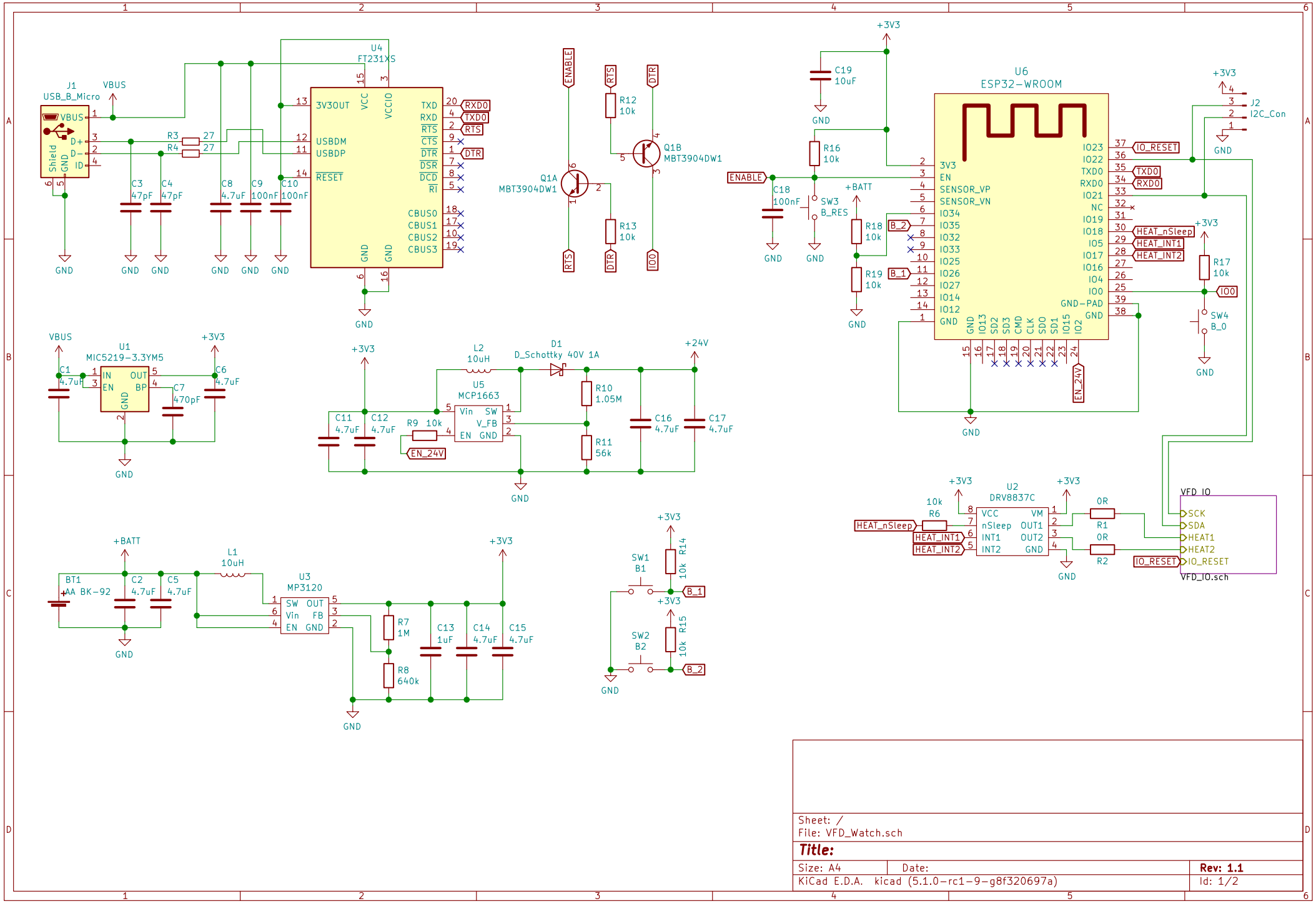

Sheet: /
File: VFD_Watch.sch

Title:

Size: A4	Date:	**Rev: 1.1**
KiCad E.D.A. kicad (5.1.0-rc1-9-g8f320697a)		Id: 1/2

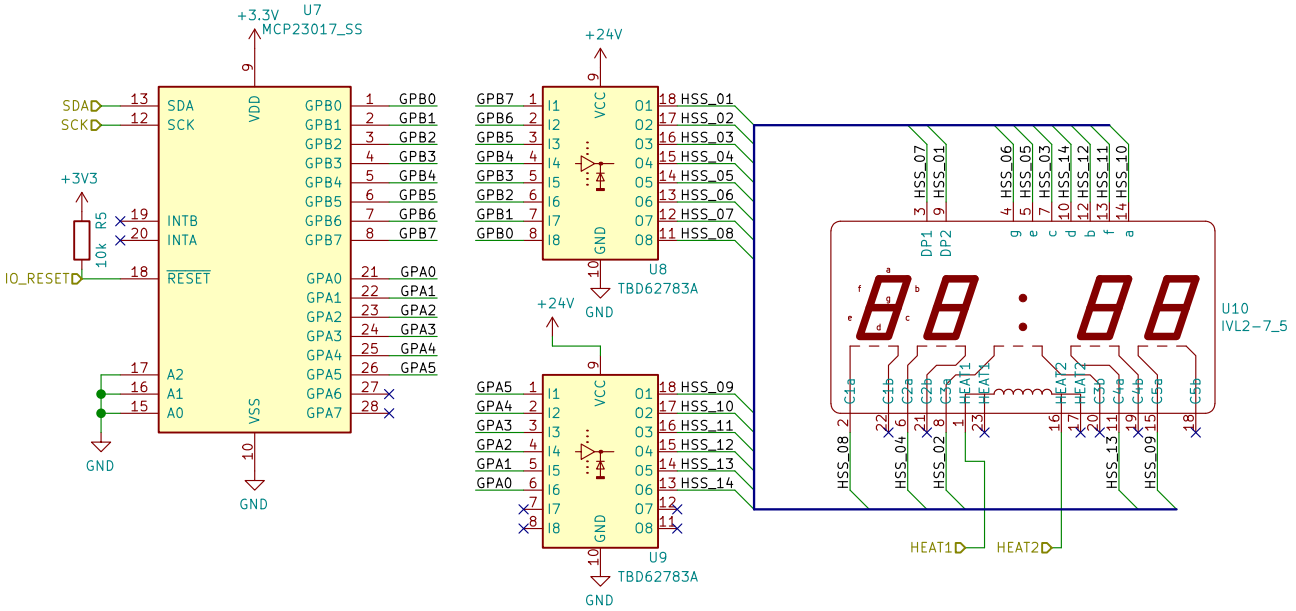

Sheet: /VFD IO/
File: VFD_IO.sch

Title:

Size: A4	Date:	**Rev:**
KiCad E.D.A. kicad (5.1.0-rc1-9-g8f320697a)		Id: 2/2