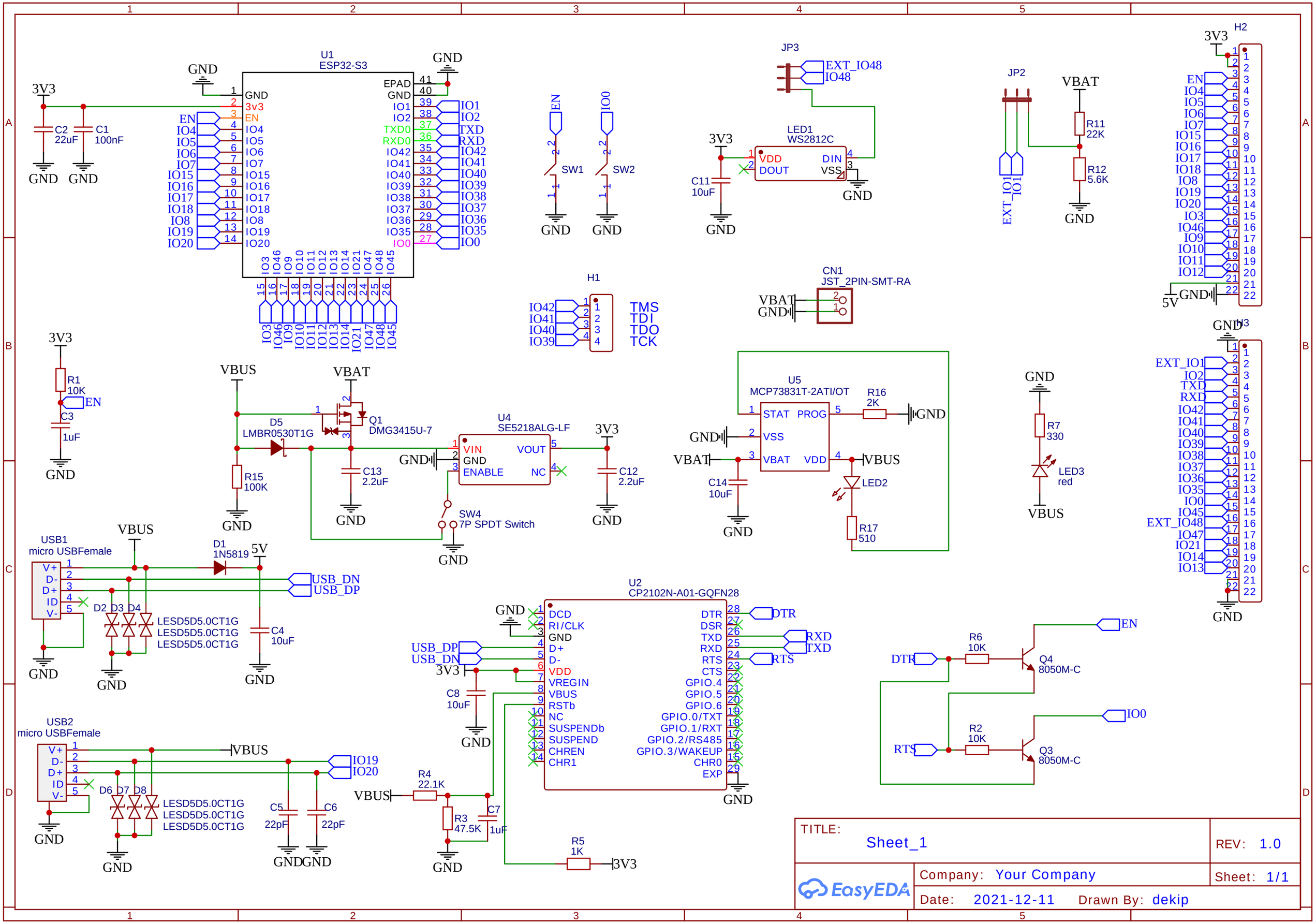
U1
ESP32-S3
U2
CP2102N-A01-GQFN28
U4
SE5218ALG-LF
U5
MCP73831T-2ATI/OT
LED1
WS2812C
JP3
JP2
H1
H2
H3
CN1
JST_2PIN-SMT-RA
USB1
micro USBFemale
USB2
micro USBFemale
SW1
SW2
SW4
7P SPDT Switch
D1
1N5819
D5
LMBR0530T1G
Q1
DMG3415U-7
Q3
8050M-C
Q4
8050M-C
LESD5D5.0CT1G
3V3
5V
VBUS
VBAT
GND
EN
IO0
TMS
TDI
TDO
TCK
DTR
RTS
RXD
TXD
USB_DN
USB_DP
EXT_IO48
EXT_IO1
LED2
LED3
red
TITLE:
Sheet_1
REV: 1.0
Company: Your Company
Sheet: 1/1
Date: 2021-12-11
Drawn By: dekip
EasyEDA