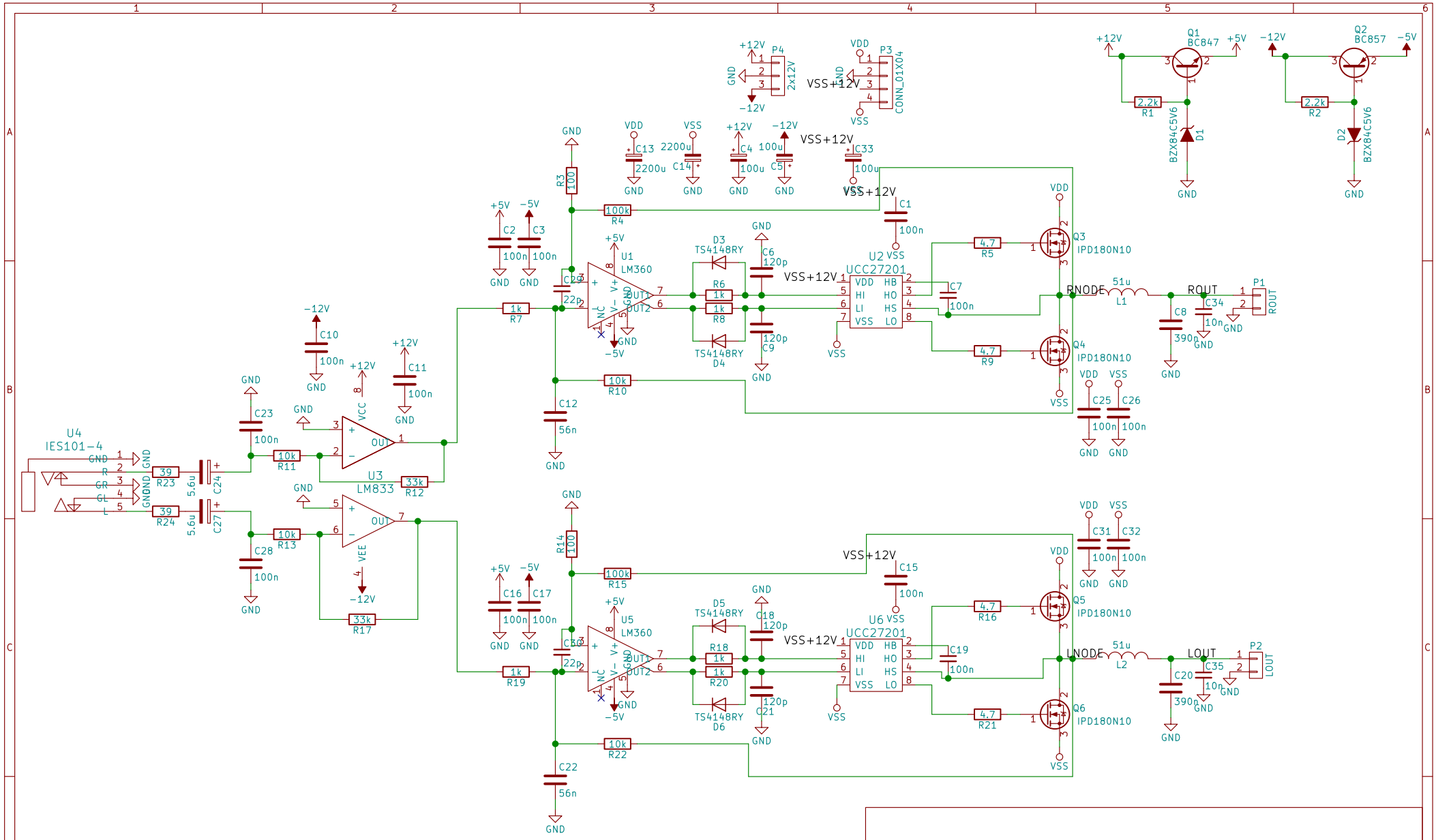

Mikkel Bjerg Petersen
Jacob Bechmann Pedersen
Aarhus Universitet Herning

Sheet: /
File: Class_D_Amp.sch

Title: Class D Amp

Size: A4	Date: 2017-12-22	**Rev: 1**
KiCad E.D.A. kicad 4.0.7-e2-637658ubuntu16.04.1		Id: 1/1