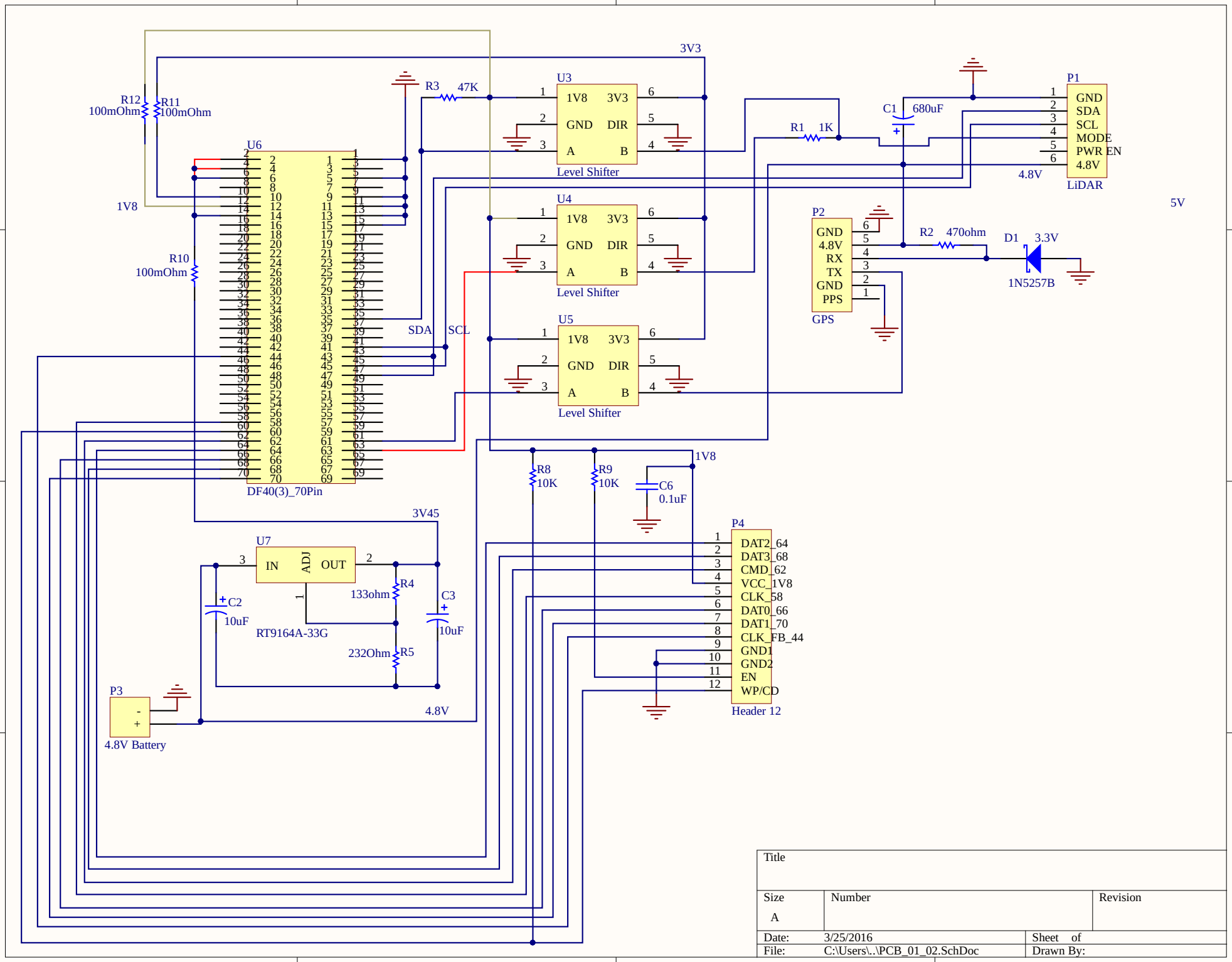

Title		
Size A	Number	Revision
Date: 3/25/2016		Sheet of
File: C:\Users\..\PCB_01_02.SchDoc		Drawn By: