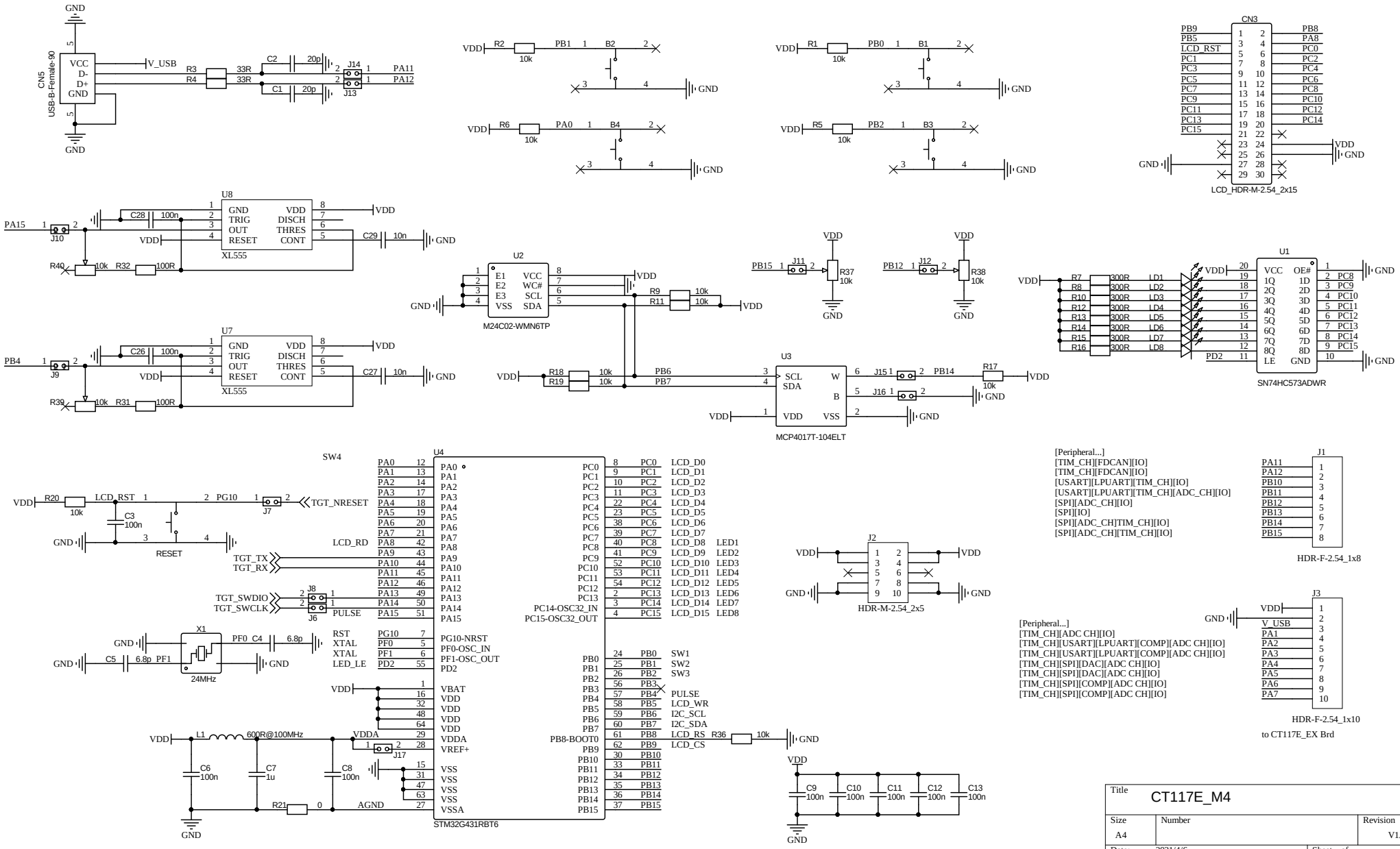
CN5
USB-B-Female-90
VCC
D-
D+
GND
V_USB
R3
R4
33R
33R
C2
20p
C1
20p
J14
J13
PA11
PA12
R2
10k
PB1
B2
R1
10k
PB0
B1
R6
10k
PA0
B4
R5
10k
PB2
B3
CN3
LCD_HDR-M-2.54_2x15
U8
XL555
GND
TRIG
OUT
RESET
VDD
DISCH
THRES
CONT
C28
100n
C29
10n
PA15
J10
R40
10k
R32
100R
U2
M24C02-WMN6TP
E1
E2
E3
VSS
VCC
WC#
SCL
SDA
R9
R11
10k
PB15
J11
R37
10k
PB12
J12
R38
10k
U1
SN74HC573ADWR
VCC
OE#
1Q
1D
2Q
2D
3Q
3D
4Q
4D
5Q
5D
6Q
6D
7Q
7D
8Q
8D
LE
R7
R8
R10
R12
R13
R14
R15
R16
300R
LD1
LD2
LD3
LD4
LD5
LD6
LD7
LD8
PD2
PC8
PC9
PC10
PC11
PC12
PC13
PC14
PC15
U7
XL555
C26
100n
C27
10n
PB4
J9
R39
10k
R31
100R
U3
MCP4017T-104ELT
SCL
SDA
W
B
VDD
VSS
R18
R19
10k
PB6
PB7
J15
J16
PB14
R17
10k
SW4
U4
STM32G431RBT6
PA0
PA1
PA2
PA3
PA4
PA5
PA6
PA7
PA8
PA9
PA10
PA11
PA12
PA13
PA14
PA15
PG10-NRST
PF0-OSC_IN
PF1-OSC_OUT
PD2
VBAT
VDD
VDDA
VREF+
VSS
VSSA
PC0
PC1
PC2
PC3
PC4
PC5
PC6
PC7
PC8
PC9
PC10
PC11
PC12
PC13
PC14-OSC32_IN
PC15-OSC32_OUT
PB0
PB1
PB2
PB3
PB4
PB5
PB6
PB7
PB8-BOOT0
PB9
PB10
PB11
PB12
PB13
PB14
PB15
LCD_D0
LCD_D1
LCD_D2
LCD_D3
LCD_D4
LCD_D5
LCD_D6
LCD_D7
LCD_D8 LED1
LCD_D9 LED2
LCD_D10 LED3
LCD_D11 LED4
LCD_D12 LED5
LCD_D13 LED6
LCD_D14 LED7
LCD_D15 LED8
SW1
SW2
SW3
PULSE
LCD_WR
I2C_SCL
I2C_SDA
LCD_RS
LCD_CS
R36
10k
LCD_RST
PG10
TGT_NRESET
RESET
LCD_RD
TGT_TX
TGT_RX
TGT_SWDIO
TGT_SWCLK
J8
J6
J7
R20
10k
C3
100n
PF0
PF1
C4
6.8p
C5
6.8p
X1
24MHz
RST
XTAL
LED_LE
L1
600R@100MHz
C6
100n
C7
1u
C8
100n
R21
0
AGND
J17
C9
100n
C10
100n
C11
100n
C12
100n
C13
100n
J2
HDR-M-2.54_2x5
[Peripheral...]
[TIM_CH][FDCAN][IO]
[TIM_CH][FDCAN][IO]
[USART][LPUART][TIM_CH][IO]
[USART][LPUART][TIM_CH][ADC_CH][IO]
[SPI][ADC_CH][IO]
[SPI][IO]
[SPI][ADC_CH]TIM_CH][IO]
[SPI][ADC_CH][TIM_CH][IO]
J1
HDR-F-2.54_1x8
[Peripheral...]
[TIM_CH][ADC CH][IO]
[TIM_CH][USART][LPUART][COMP][ADC CH][IO]
[TIM_CH][USART][LPUART][COMP][ADC CH][IO]
[TIM_CH][SPI][DAC][ADC CH][IO]
[TIM_CH][SPI][DAC][ADC CH][IO]
[TIM_CH][SPI][COMP][ADC CH][IO]
[TIM_CH][SPI][COMP][ADC CH][IO]
J3
HDR-F-2.54_1x10
to CT117E_EX Brd
Title
CT117E_M4
Size
A4
Number
Revision
V1.0
Date:
2021/4/6
Sheet of
File:
D:\软件-PCB\..\CT117_M4.SchDoc
Drawn By:
4T

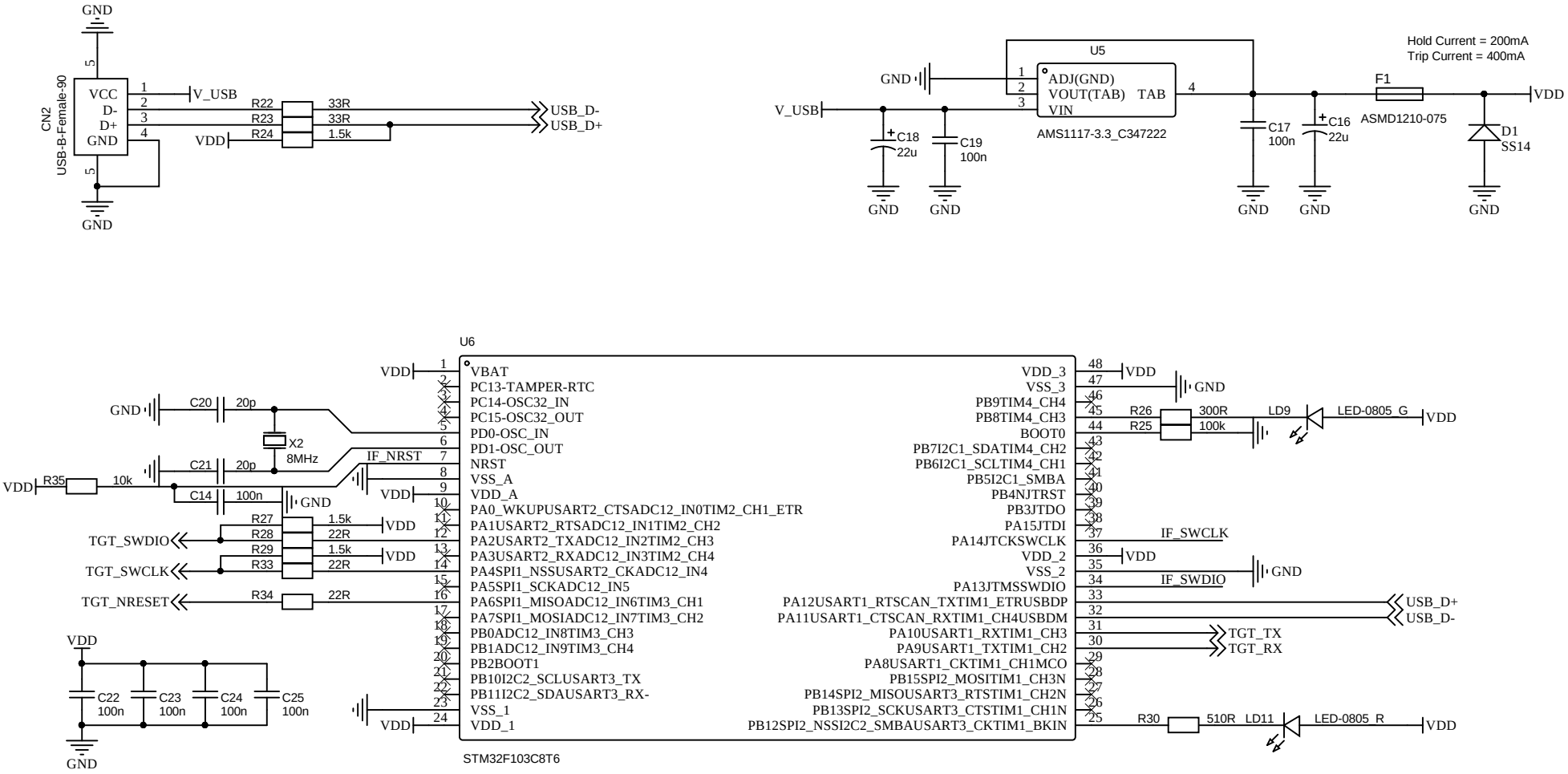

Title		
DAP Link		
Size: A4	Number	Revision: V1.0
Date: 2021/4/6		Sheet of
File: D:\软件-PCB\..\DAPule.SchDoc		Drawn By: 4T